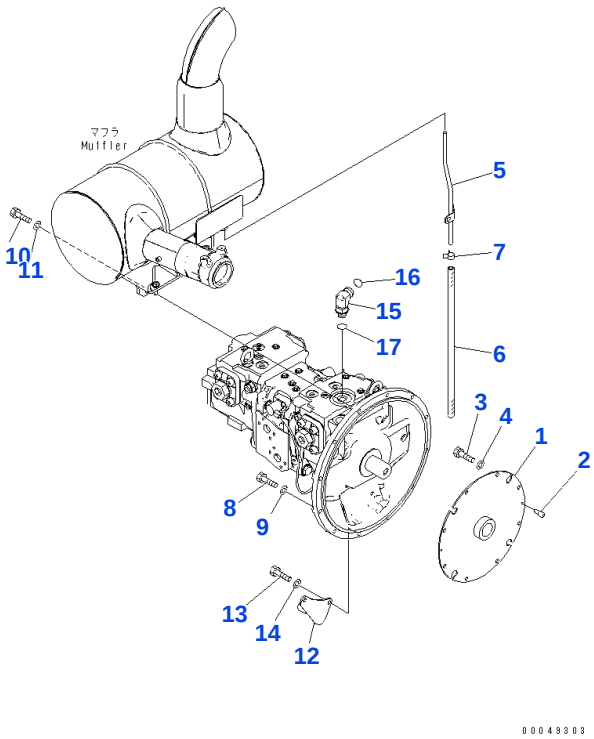

Reference: B0000-01H0

030010 DAMPER (#310001-)

Item	Part No.	Part Name	Qty	Options
1	22U-01-21310	DISC DAMPER	1	SN: 310001-UP
2	203-01-51120	PIN	2	SN: 310001-UP
3	01010-81020	BOLT	8	SN: 310001-UP
4	01643-31032	WASHER	8	SN: 310001-UP
5	6754-11-5440	TUBE	1	SN: 310001-UP
6	07260-20950	HOSE	1	SN: 310001-UP
7	07285-00155	CLIP	1	SN: 310001-UP
8	01010-81050	BOLT	8	SN: 310001-UP
9	01643-31032	WASHER	8	SN: 310001-UP
10	01010-81060	BOLT	2	SN: 310001-UP
11	01643-31032	WASHER	2	SN: 310001-UP
12	20Y-62-41572	BRACKET	1	SN: 310001-UP
13	01010-81050	BOLT	2	SN: 310001-UP
14	01643-31032	WASHER	2	SN: 310001-UP
15	02782-10628	ERBO	1	SN: 310001-UP
16	02896-11018	O RING	1	SN: 310001-UP
17	07002-12434	O RING	1	SN: 310001-UP

Reference: B0000-01H0

Open this exact parts catalogue on K-Part

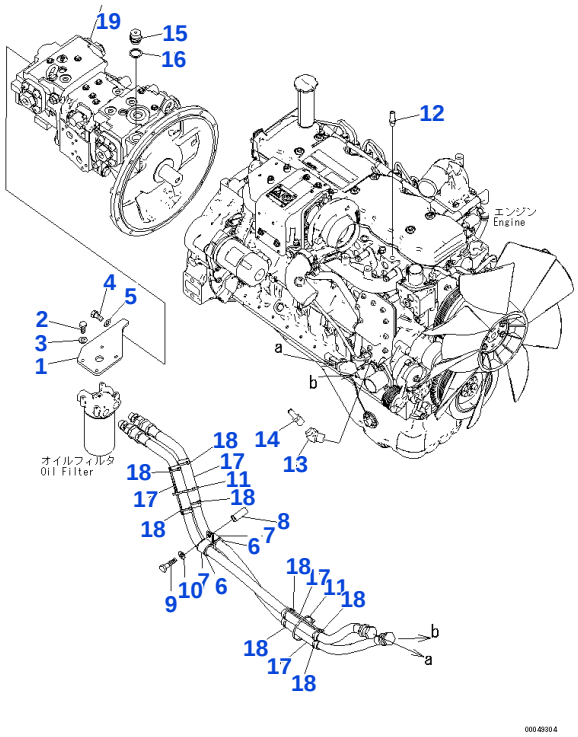

Reference: B0000-02H0

030020 FILTER REMOTE PIPING AND MAIN PUMP(#310001-)

Item	Part No.	Part Name	Qty	Options
1	20Y-62-51433	PLATE	1	SN: 310003-UP
1	20Y-62-51432	☐ PLATE	1	SN: 310001-310002
2	01010-80825	BOLT	4	SN: 310001-UP
3	01643-30823	WASHER	4	SN: 310001-UP
4	01010-81230	BOLT	2	SN: 310001-UP
5	01643-31232	WASHER	2	SN: 310001-UP
6	198-06-53630	CUSHION	2	SN: 310001-UP
7	04434-53412	CLIP	2	SN: 310001-UP
8	195-979-5190	COLLAR	1	SN: 310001-UP
9	01010-81275	BOLT	1	SN: 310001-UP
10	01643-31232	WASHER	1	SN: 310001-UP
11	08034-20536	BAND	2	SN: 310001-UP
12	20Y-810-1120	NIPPLE	1	SN: 310001-UP
13	20Y-810-1161	ERBO	1	SN: 310001-UP
14	22U-979-1930	NIPPLE	1	SN: 310001-UP
15	07030-03034	BREATHER	1	SN: 310001-UP
16	07005-03016	SEAL, WASHER	1	SN: 310001-UP
17	20Y-01-41250	COVER	4	SN: 310001-UP
18	08034-20536	BAND	8	SN: 310001-UP
19	708-2L-00500	PUMP ASSEMBLY	1	SN: 310001-UP

Catalog signs: ☐ part above may be used instead

Reference: B0000-02H0

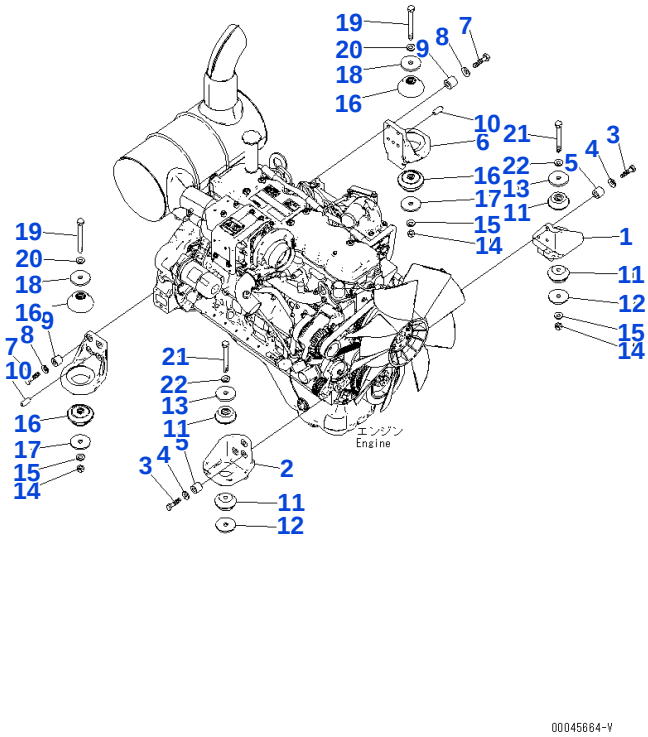

Reference: B0100-01H0

030030 ENGINE MOUNT(#310001-)

Item	Part No.	Part Name	Qty	Options
1	20Y-01-41161	BRACKET	1	SN: 310001-UP
2	20Y-01-41170	BRACKET	1	SN: 310001-UP
3	20Y-01-41230	BOLT	6	SN: 310001-UP
4	01643-31232	WASHER	6	SN: 310001-UP
5	20Y-01-21260	SPACER	6	SN: 310001-UP
6	20Y-01-41180	BRACKET	2	SN: 310001-UP
7	20Y-01-41230	BOLT	8	SN: 310001-UP
8	01643-31232	WASHER	8	SN: 310001-UP
9	20Y-01-21260	SPACER	8	SN: 310001-UP
10	04020-01228	PIN	2	SN: 310001-UP
11	20Y-01-12210	CUSHION	4	SN: 310001-UP
12	20Y-01-41210	PLATE	2	SN: 310001-UP
13	20Y-01-11141	WASHER	2	SN: 310001-UP
14	01580-11613	NAT	3	SN: 310001-UP
15	01643-31645	WASHER	3	SN: 310001-UP
16	20Y-01-12222	CUSHION	4	SN: 310001-UP
17	20Y-01-41210	PLATE	2	SN: 310001-UP
18	20Y-01-11141	WASHER	2	SN: 310001-UP
19	01011-81655	BOLT	2	SN: 310001-UP
20	01643-31645	WASHER	2	SN: 310001-UP
21	20Y-01-12270	BOLT	2	SN: 310001-UP
22	01643-31645	WASHER	2	SN: 310001-UP

Reference: B0100-01H0

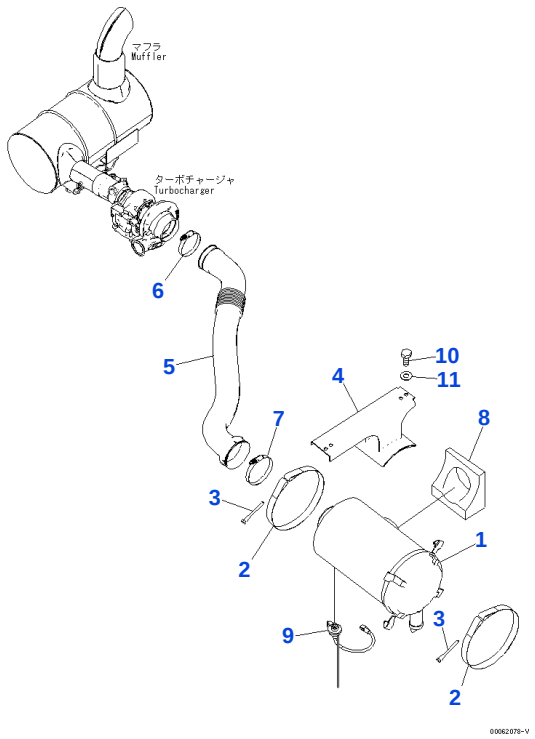

Reference: B0200-01H0

030040 AIR CLEANER CONNECTION PARTS(#310001-)

Item	Part No.	Part Name	Qty	Options
1	6738-81-7200	AIR CLEANER ASSEMBLY	1	SN: 310001-UP
2	6222-81-7190	BAND ASSEMBLY	2	SN: 310001-UP
3	6643-11-4641	BOLT	2	SN: 310001-UP
4	20Y-01-41190	FRAME	1	SN: 310001-UP
5	20Y-01-41110	HOSE	1	SN: 310001-UP
6	07299-00105	CLAMP	1	SN: 310001-UP
7	07299-00130	CLAMP	1	SN: 310001-UP
8	20Y-01-41340	SEAL	1	SN: 310001-UP
9	7861-93-1420	SENSOR	1	SN: 310001-UP
10	01010-81230	BOLT	4	SN: 310001-UP
11	01643-31232	WASHER	4	SN: 310001-UP

Reference: B0200-01H0

Open this exact parts catalogue on K-Part

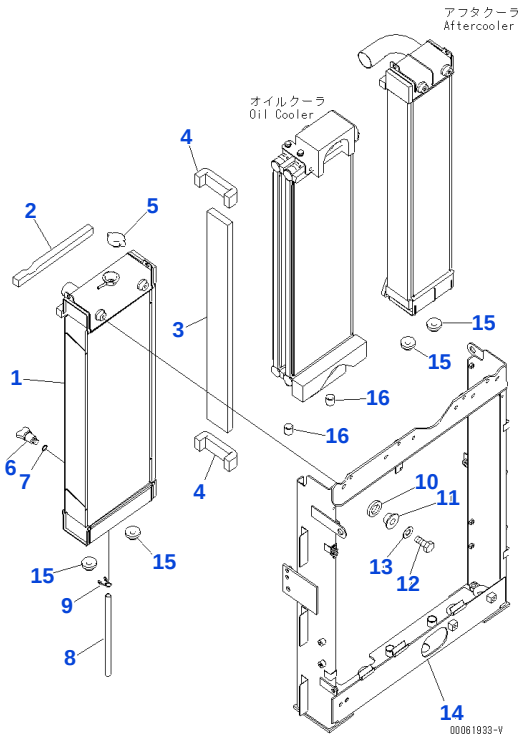

Reference: C0100-01H0

060010 COOLING DEVICE (RADIATOR) (#310001-)

Item	Part No.	Part Name	Qty	Options
	20Y-03-42451	RADIATOR ASSEMBLY	1	SN: 310001-UP
1		• ☆ RADIATOR CORE ASSEMBLY	1	SN: 310001-UP
2	20Y-03-42650	• SEAT	1	SN: 310001-UP
3	20Y-03-42270	• SEAT	1	SN: 310001-UP
4	20Y-03-42160	• SEAT	2	SN: 310001-UP
5	20Y-03-22110	CAP	1	SN: 310001-UP
6	205-03-62660	PLUG	1	SN: 310001-UP
7	07000-11007	• O RING	1	SN: 310001-UP
8	203-03-41410	HOSE	1	SN: 310001-UP
9	20Y-03-11330	CLIP	1	SN: 310001-UP
10	22U-03-22860	CUSHION	2	SN: 310001-UP
11	6738-61-4952	COLLAR	2	SN: 310001-UP
12	01010-81030	BOLT	2	SN: 310001-UP
13	01643-31032	WASHER	2	SN: 310001-UP
14	20Y-03-42510	FRAME	1	SN: 310001-UP
15	20Y-03-41580	CUSHION	4	SN: 310001-UP
16	20Y-03-41590	CUSHION	2	SN: 310001-UP

Catalog signs: ☆ not supplied separately: assembly only

Reference: C0100-01H0

Open this exact parts catalogue on K-Part

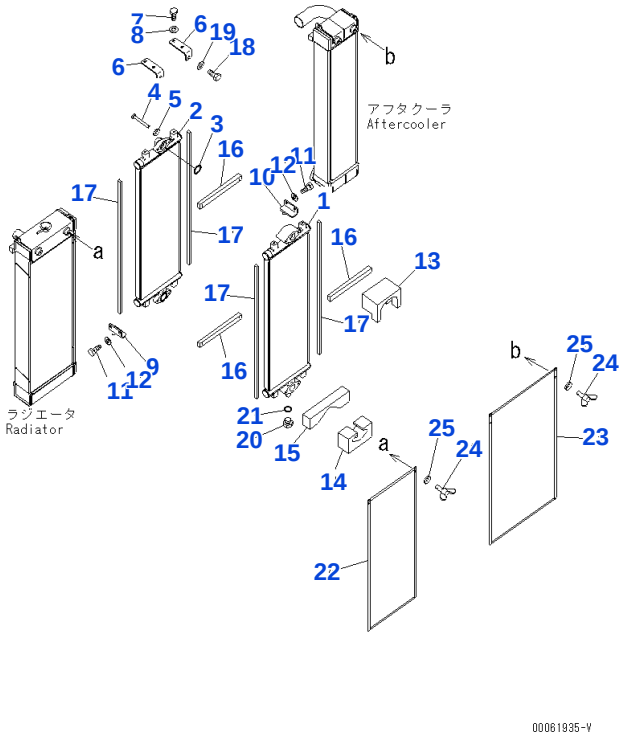

Reference: C0100-02H0

060020 COOLING DEVICE (OIL COOLER) (#310001-)

Item	Part No.	Part Name	Qty	Options
1	20Y-03-42560	OIL COOLER	1	SN: 310001-UP
2	20Y-03-42570	OIL COOLER	1	SN: 310001-UP
3	07000-13045	O RING	2	SN: 310001-UP
4	01010-81240	BOLT	4	SN: 310001-UP
5	01643-31232	WASHER	4	SN: 310001-UP
6	20Y-03-42610	BRACKET	2	SN: 310001-UP
7	01010-81025	BOLT	4	SN: 310001-UP
8	01643-31032	WASHER	4	SN: 310001-UP
9	20Y-03-42620	BRACKET	1	SN: 310001-UP
10	20Y-03-42630	BRACKET	1	SN: 310001-UP
11	01010-81025	BOLT	4	SN: 310001-UP
12	01643-31032	WASHER	4	SN: 310001-UP
13	206-03-21470	SEAT	1	SN: 310001-UP
14	206-03-21520	SEAT	1	SN: 310001-UP
15	20Y-03-42640	SEAT	1	SN: 310001-UP
16	22U-03-22790	SEAT	3	SN: 310001-UP
17	206-03-21580	SEAT	4	SN: 310001-UP
18	01010-81030	BOLT	2	SN: 310001-UP
19	01643-31032	WASHER	2	SN: 310001-UP
20	07040-11409	PLUG	1	SN: 310001-UP
21	07002-11423	O RING	1	SN: 310001-UP
22	20Y-03-42670	NET	1	SN: 310001-UP
23	20Y-03-42710	NET	1	SN: 310001-UP
24	01434-10616	BOLT, WING	4	SN: 310001-UP
25	01643-30623	WASHER	4	SN: 310001-UP

Reference: C0100-02H0

Open this exact parts catalogue on K-Part

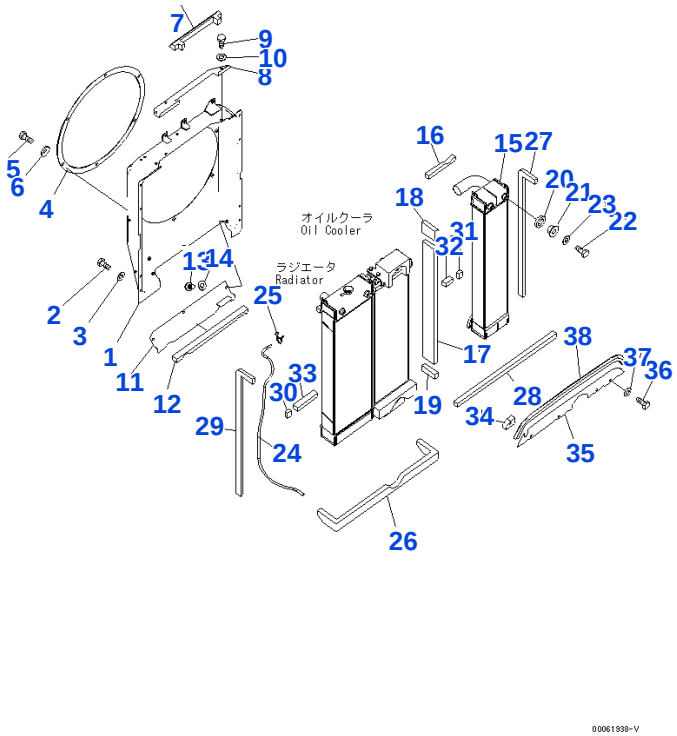

Reference: C0100-03H0

060030 COOLING UNIT (SHROUD AND AFTER COOLER)(#310001-)

Item	Part No.	Part Name	Qty	Options
1	20Y-03-42470	SHROUD	1	SN: 310001-UP
2	01010-81020	BOLT	8	SN: 310001-UP
3	01643-31032	WASHER	8	SN: 310001-UP
4	20Y-03-41321	PLATE	1	SN: 310001-UP
5	01010-81020	BOLT	6	SN: 310001-UP
6	203-54-56970	WASHER	6	SN: 310001-UP
7	20Y-03-42210	SEAT	1	SN: 310001-UP
8	20Y-03-42190	COVER	1	SN: 310001-UP
9	01010-81020	BOLT	3	SN: 310001-UP
10	01643-31032	WASHER	3	SN: 310001-UP
11	20Y-03-42820	COVER	1	SN: 310001-UP
12	20Y-03-42830	SEAT	1	SN: 310001-UP
13	01010-81020	BOLT	3	SN: 310001-UP
14	01643-31032	WASHER	3	SN: 310001-UP
15	20Y-03-41131	AFTERCOOLER	1	SN: 310001-UP
16	20Y-03-41491	SEAT	1	SN: 310001-UP
17	20Y-03-42260	SEAT	1	SN: 310001-UP
18	20Y-03-42160	SEAT	1	SN: 310001-UP
19	20Y-03-42290	SEAT	1	SN: 310001-UP
20	22U-03-22860	CUSHION	2	SN: 310001-UP
21	6738-61-4952	COLLAR	2	SN: 310001-UP
22	01010-81030	BOLT	2	SN: 310001-UP
23	01643-31032	WASHER	2	SN: 310001-UP
24	20Y-03-42340	HOSE	1	SN: 310001-UP
25	206-03-43340	CLIP	1	SN: 310001-UP
26	20Y-03-41391	SEAT	1	SN: 310001-UP
27	206-03-21310	SEAT	1	SN: 310001-UP
28	206-03-21320	SEAT	1	SN: 310001-UP
29	206-03-21310	SEAT	1	SN: 310001-UP
30	206-03-21560	SEAT	1	SN: 310001-UP
31	206-03-21570	SEAT	1	SN: 310001-UP
32	20Y-03-41461	SEAT	1	SN: 310001-UP
33	20Y-03-41521	SEAT	1	SN: 310001-UP
34	20Y-03-41632	SEAT	1	SN: 310001-UP

Open this exact parts catalogue on K-Part

Item	Part No.	Part Name	Qty	Options
35	20Y-03-42720	COVER	1	SN: 310001-UP
36	01010-81020	BOLT	4	SN: 310001-UP
37	01643-31032	WASHER	4	SN: 310001-UP
38	20Y-03-41870	SEAL	1	SN: 310001-UP

Reference: C0100-03H0

Open this exact parts catalogue on K-Part

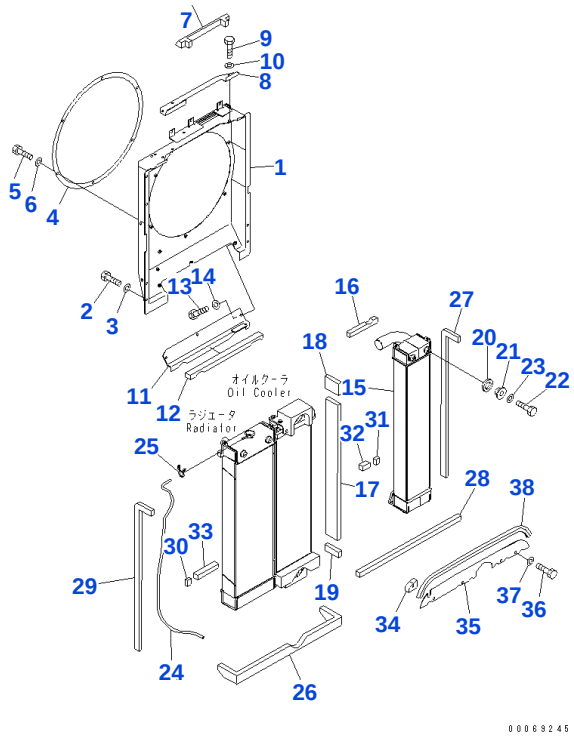

Reference: C0100-03H4

060040 COOLING DEVICE (SHROUD AND AFTER COOLER) (FOR PARALLEL LINK CAB AND MAGNET OR MA

Item	Part No.	Part Name	Qty	Options
1	20Y-03-81171	SHROUD	1	SN: 310001-UP
2	01010-81020	BOLT	8	SN: 310001-UP
3	01643-31032	WASHER	8	SN: 310001-UP
4	20Y-03-41321	PLATE	1	SN: 310001-UP
5	01010-81020	BOLT	6	SN: 310001-UP
6	203-54-56970	WASHER	6	SN: 310001-UP
7	20Y-03-42210	SEAT	1	SN: 310001-UP
8	20Y-03-42190	COVER	1	SN: 310001-UP
9	01010-81020	BOLT	3	SN: 310001-UP
10	01643-31032	WASHER	3	SN: 310001-UP
11	20Y-03-42820	COVER	1	SN: 310001-UP
12	20Y-03-42830	SEAT	1	SN: 310001-UP
13	01010-81020	BOLT	3	SN: 310001-UP
14	01643-31032	WASHER	3	SN: 310001-UP
15	20Y-03-41131	AFTERCOOLER	1	SN: 310001-UP
16	20Y-03-41491	SEAT	1	SN: 310001-UP
17	20Y-03-42260	SEAT	1	SN: 310001-UP
18	20Y-03-42160	SEAT	1	SN: 310001-UP
19	20Y-03-42290	SEAT	1	SN: 310001-UP
20	22U-03-22860	CUSHION	2	SN: 310001-UP
21	6738-61-4952	COLLAR	2	SN: 310001-UP
22	01010-81030	BOLT	2	SN: 310001-UP
23	01643-31032	WASHER	2	SN: 310001-UP
24	20Y-03-42340	HOSE	1	SN: 310001-UP
25	206-03-43340	CLIP	1	SN: 310001-UP
26	20Y-03-41391	SEAT	1	SN: 310001-UP
27	206-03-21310	SEAT	1	SN: 310001-UP
28	206-03-21320	SEAT	1	SN: 310001-UP
29	206-03-21310	SEAT	1	SN: 310001-UP
30	206-03-21560	SEAT	1	SN: 310001-UP
31	206-03-21570	SEAT	1	SN: 310001-UP
32	20Y-03-41461	SEAT	1	SN: 310001-UP
33	20Y-03-41521	SEAT	1	SN: 310001-UP

Open this exact parts catalogue on K-Part

Item	Part No.	Part Name	Qty	Options
34	20Y-03-41632	SEAT	1	SN: 310001-UP
35	20Y-03-42720	COVER	1	SN: 310001-UP
36	01010-81020	BOLT	4	SN: 310001-UP
37	01643-31032	WASHER	4	SN: 310001-UP
38	20Y-03-41870	SEAL	1	SN: 310001-UP

Reference: C0100-03H4

Open this exact parts catalogue on K-Part

Get the complete PDF catalogue

Komatsu PC210LC-8N1 (JPN) PARALLEL LINK CAB SPECIFICATION S/N 310001-315645 (JAPANESE)

$89

with PayPal | Store cart: $99

Buy this PDF on Manuals Komatsu

Check the model, serial range and language before payment.

Download instructions are emailed after payment confirmation.

This free sample contains 10 catalogue pages.