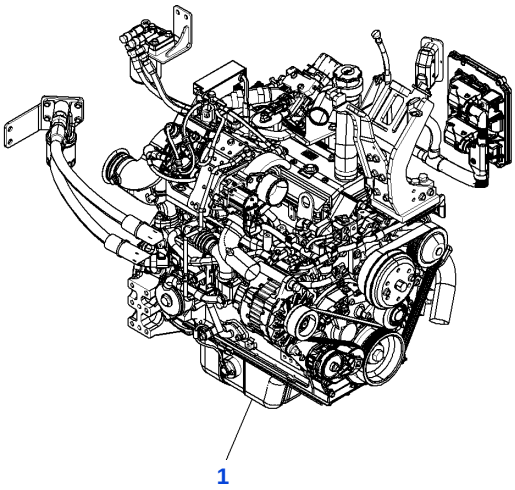

RKB137180

Reference: A0000-001001

A0000-001001 ENGINE ASSEMBLY

Item	Part No.	Part Name	Qty	Options
1	6276-E0-RA10	ENGINE, ASSEMBLY	1	SN: F60001-UP

Reference: A0000-001001

Open this exact parts catalogue on K-Part

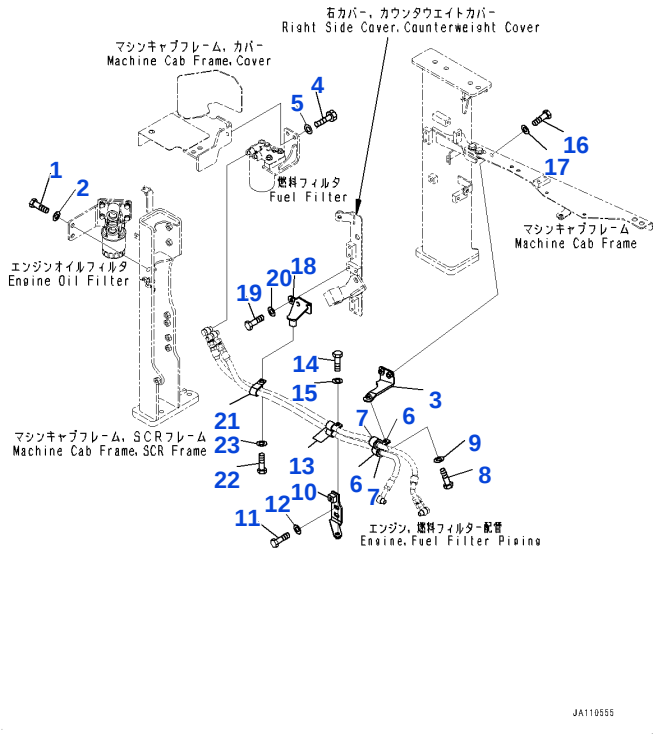

Reference: B0100-001001

B0100-001001 ENGINE MOUNTING, FILTER REMOTE RELATED PARTS

Item	Part No.	Part Name	Qty	Options
1	01010-81235	BOLT	2	SN: F60001-UP
2	01643-31232	WASHER	2	SN: F60001-UP
3	22B-01-41640	BRACKET	1	SN: F60001-UP
4	01010-81030	BOLT	2	SN: F60001-UP
5	01643-31032	WASHER	2	SN: F60001-UP
6	04434-52511	CLAMP	2	SN: F60001-UP
7	07095-20318	RUBBER	2	SN: F60001-UP
8	01010-81025	BOLT	1	SN: F60001-UP
9	01643-31032	WASHER	1	SN: F60001-UP
10	22B-01-41630	BRACKET	1	SN: F60001-UP
11	01010-81020	BOLT	2	SN: F60001-UP
12	01643-31032	WASHER	2	SN: F60001-UP
13	04434-51910	CLAMP	2	SN: F60001-UP
14	01010-81025	BOLT	1	SN: F60001-UP
15	01643-31032	WASHER	1	SN: F60001-UP
16	01010-81025	BOLT	2	SN: F60001-UP
17	01643-31032	WASHER	2	SN: F60001-UP
18	22B-01-41651	BRACKET	1	SN: F60001-UP
19	01010-81020	BOLT	2	SN: F60001-UP
20	01643-31032	WASHER	2	SN: F60001-UP
21	04435-51910	CLAMP	1	SN: F60001-UP
22	01010-81020	BOLT	1	SN: F60001-UP
23	01643-31032	WASHER	1	SN: F60001-UP

Reference: B0100-001001

Open this exact parts catalogue on K-Part

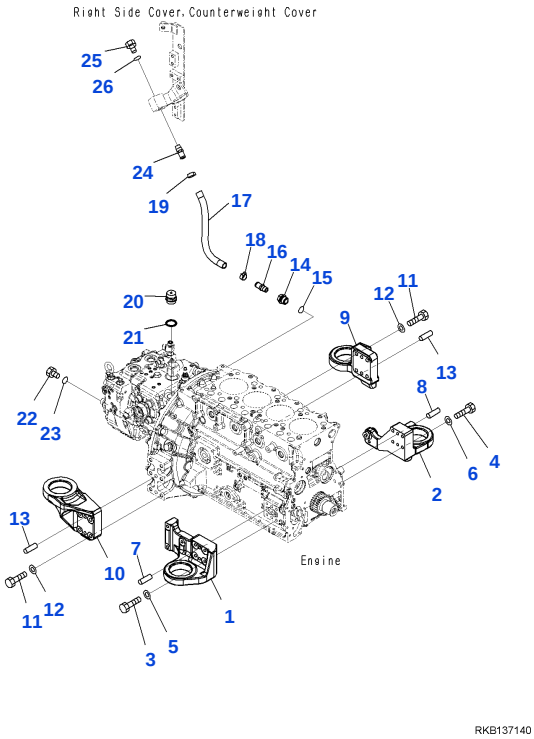

Reference: B0100-001002

B0100-001002 ENGINE MOUNTING, PIPING AND BRACKET

Item	Part No.	Part Name	Qty	Options
1	22B-01-31511	BRACKET	1	SN: F60001-UP
2	22B-01-31521	BRACKET	1	SN: F60001-UP
3	13Y-01-12470	BOLT	6	SN: F60001-UP
4	13Y-01-12470	BOLT	5	SN: F60001-UP
5	01643-31032	WASHER	6	SN: F60001-UP
6	01643-31032	WASHER	5	SN: F60001-UP
7	04020-01024	PIN, DOWEL	2	SN: F60001-UP
8	04020-01024	PIN, DOWEL	2	SN: F60001-UP
9	22B-01-31541	BRACKET	1	SN: F60001-UP
10	22B-01-31531	BRACKET	1	SN: F60001-UP
11	22B-01-11190	BOLT	8	SN: F60001-UP
12	01643-31232	WASHER	8	SN: F60001-UP
13	04020-01228	PIN, DOWEL	4	SN: F60001-UP
14	21D-62-32930	PLUG	1	SN: F60001-UP
15	07002-12434	• O-RING	1	SN: F60001-UP
16	21T-06-17940	• PLUG	1	SN: F60001-UP
17	566-07-41540	CONNECTOR	1	SN: F60001-UP
18	07286-01633	HOSE	1	SN: F60001-UP
19	07285-00200	CLIP, HOSE	2	SN: F60001-UP
20	07030-03034	BREATHER	1	SN: F60001-UP
21	07005-03016	SEAL, WASHER	1	SN: F60001-UP
22	21W-09-R1120	PLUG	1	SN: F60001-UP
23	07002-11223	• O-RING	1	SN: F60001-UP
24	566-07-41540	CONNECTOR	1	SN: F60001-UP
25	22L-09-R1820	PLUG	1	SN: F60001-UP
26	07002-12434	• O-RING	1	SN: F60001-UP

Reference: B0100-001002

Open this exact parts catalogue on K-Part

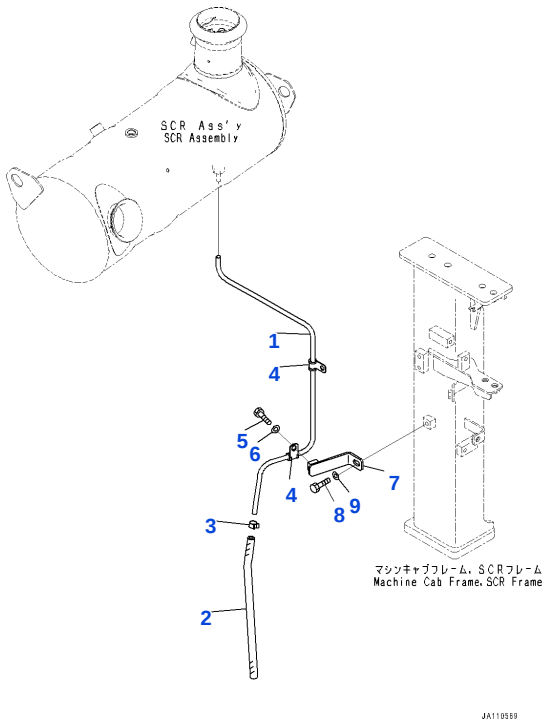

Reference: B0100-001003

B0100-001003 ENGINE MOUNTING, SCR DRAIN PIPING

Item	Part No.	Part Name	Qty	Options
1	22B-01-49211	TUBE	1	SN: F60001-UP
2	22B-01-31870	HOSE	1	SN: F60001-UP
3	07285-00150	CLIP, HOSE	1	SN: F60001-UP
4	600-052-3100	CLIP	2	SN: F60001-UP
5	01010-81020	BOLT	2	SN: F60001-UP
6	01643-31032	WASHER	2	SN: F60001-UP
7	22B-01-43160	BRACKET	1	SN: F60001-UP
8	01010-81020	BOLT	1	SN: F60001-UP
9	01643-31032	WASHER	1	SN: F60001-UP

Reference: B0100-001003

Open this exact parts catalogue on K-Part

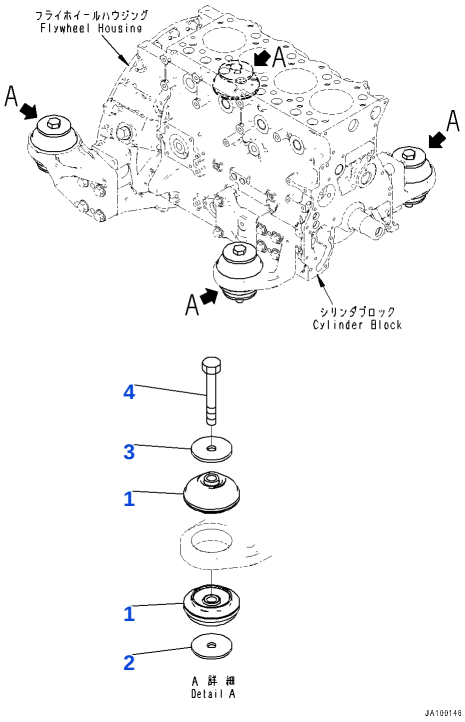

Reference: B0100-001004

B0100-001004 ENGINE MOUNTING

Item	Part No.	Part Name	Qty	Options
1	22B-01-31551	CUSHION	8	SN: F60001-UP
2	203-01-67540	WASHER	4	SN: F60001-UP
3	113-01-21120	WASHER	4	SN: F60001-UP
4	01011-81630	BOLT	4	SN: F60001-UP

Reference: B0100-001004

Open this exact parts catalogue on K-Part

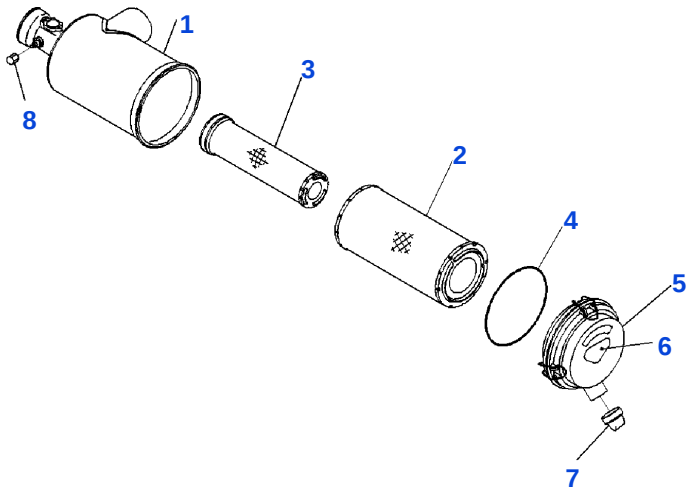

JY033960

Reference: B0200-001001

B0200-001001 AIR CLEANER, INNER PARTS

Item	Part No.	Part Name	Qty	Options
1	6276-81-7100	AIR CLEANER	1	SN: F60001-UP
	600-185-2500	• ELEMENT, ASSEMBLY	1	SN: F60001-UP
2	600-185-2510	• • ELEMENT, OUTER	1	SN: F60001-UP
3		• • ELEMENT, INNER	1	SN: F60001-UP
4	600-184-1280	• • O-RING	1	SN: F60001-UP
5	600-184-1330	• COVER, ASSEMBLY	1	SN: F60001-UP
6	600-184-2810	• • PLATE, MARK	1	SN: F60001-UP
7	600-184-1350	• • VALVE	1	SN: F60001-UP
8	561-02-12420	• CAP	1	SN: F60001-UP
		[C1]-This part cannot be supplied as an individual part. It is supplied as an assembly.		

Reference: B0200-001001

Open this exact parts catalogue on K-Part

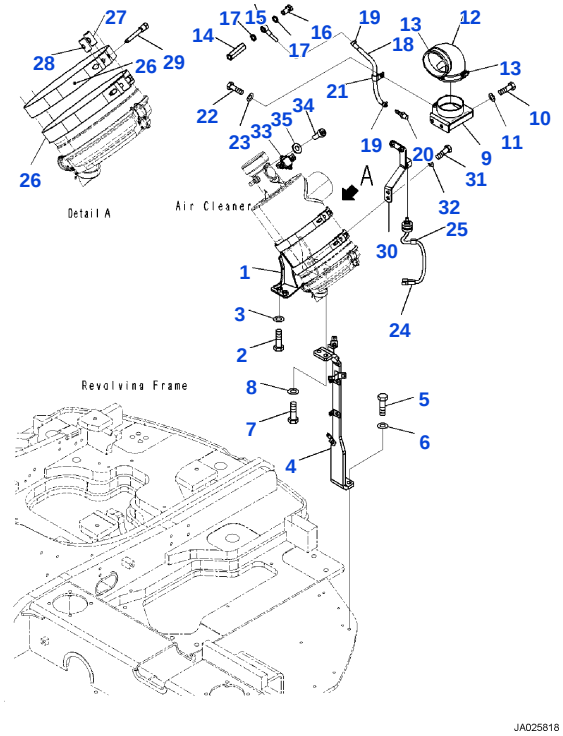

Reference: B0200-001002

B0200-001002 AIR CLEANER, MOUNTING AND PIPING

Item	Part No.	Part Name	Qty	Options
1	22B-01-41211	BRACKET	1	SN: F60001-UP
2	01010-81230	BOLT	2	SN: F60001-UP
3	01643-31232	WASHER	2	SN: F60001-UP
4	22B-01-41231	FRAME	1	SN: F60001-UP
5	01010-81230	BOLT	2	SN: F60001-UP
6	01643-31232	WASHER	2	SN: F60001-UP
7	01010-81235	BOLT	2	SN: F60001-UP
8	01643-31232	WASHER	2	SN: F60001-UP
9	22B-01-41161	BRACKET	1	SN: F60001-UP
10	01010-81025	BOLT	2	SN: F60001-UP
11	01643-31032	WASHER	2	SN: F60001-UP
12	22B-01-41450	HOSE	1	SN: F60001-UP
13	07289-00105	CLAMP	2	SN: F60001-UP
14	22B-01-43310	NIPPLE	1	SN: F60001-UP
15	6206-71-1770	JOINT	1	SN: F60001-UP
16	07206-30710	JOINT	1	SN: F60001-UP
17	07005-01012	SEAL, WASHER	2	SN: F60001-UP
18	22B-01-43320	HOSE, ASSEMBLY	1	SN: F60001-UP
19	07285-00125	CLAMP	2	SN: F60001-UP
20	6131-81-8820	NIPPLE	1	SN: F60001-UP
21	04434-51410	CLAMP	1	SN: F60001-UP
22	01010-81020	BOLT	1	SN: F60001-UP
23	01643-31032	WASHER	1	SN: F60001-UP
24	7861-93-1430	SENSOR, SWITCH	1	SN: F60001-UP
25	08211-00720	CLIP	1	SN: F60001-UP
26	124-01-56910	WASHER	2	SN: F60001-UP
27	124-01-56920	PIN	2	SN: F60001-UP
28	124-01-56930	PIN	2	SN: F60001-UP
29	6110-23-6520	BOLT	2	SN: F60001-UP
30	22B-01-41272	BRACKET	1	SN: F60001-UP
31	01010-81025	BOLT	2	SN: F60001-UP
32	01643-31032	WASHER	2	SN: F60001-UP
33	6252-81-7800	SENSOR, AIRFLOW	1	SN: F60001-UP
34	01252-B0410	BOLT	2	SN: F60001-UP

Open this exact parts catalogue on K-Part

Item	Part No.	Part Name	Qty	Options
35	01640-20408	WASHER	2	SN: F60001-UP

Reference: B0200-001002

Open this exact parts catalogue on K-Part

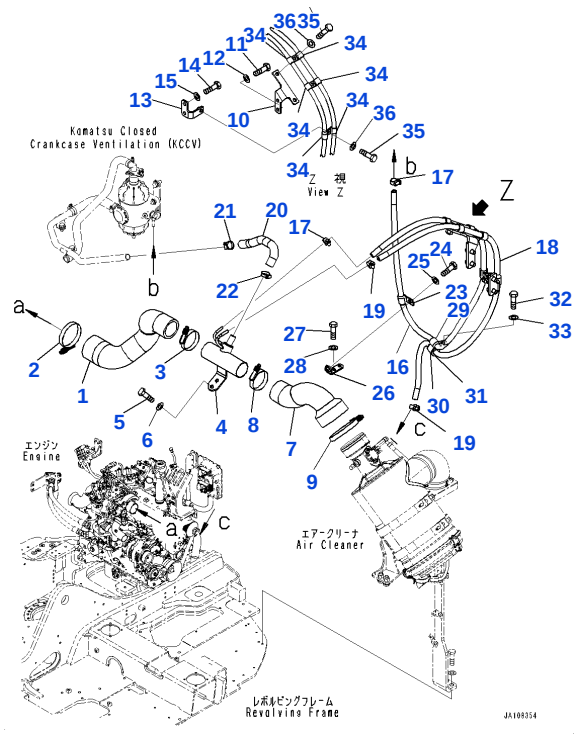

Reference: B0200-001003

B0200-001003 AIR CLEANER, HOSE AND BRACKET

Item	Part No.	Part Name	Qty	Options
1	22B-01-41110	HOSE	1	SN: F60001-UP
2	07299-00095	CLAMP	1	SN: F60001-UP
3	07299-00080	CLAMP	1	SN: F60001-UP
4	22B-01-41120	TUBE	1	SN: F60001-UP
5	01010-81020	BOLT	2	SN: F60001-UP
6	01643-31032	WASHER	2	SN: F60001-UP
7	22B-01-41290	HOSE	1	SN: F60001-UP
8	07299-00080	CLAMP	1	SN: F60001-UP
9	07299-00120	CLAMP	1	SN: F60001-UP
10	22B-01-44230	BRACKET	1	SN: F60001-UP
11	01010-81025	BOLT	2	SN: F60001-UP
12	01643-31032	WASHER	2	SN: F60001-UP
13	22B-01-44240	BRACKET	1	SN: F60001-UP
14	01010-81025	BOLT	2	SN: F60001-UP
15	01643-31032	WASHER	2	SN: F60001-UP
16	22B-01-44210	HOSE	1	SN: F60001-UP
17	07281-00167	CLAMP	2	SN: F60001-UP
18	22B-01-44220	HOSE	1	SN: F60001-UP
19	07281-00167	CLAMP	2	SN: F60001-UP
20	22B-01-41751	HOSE	1	SN: F60001-UP
21	22B-01-31260	CLAMP	1	SN: F60001-UP
22	22B-01-31260	CLAMP	1	SN: F60001-UP
23	04434-51410	CLAMP	1	SN: F60001-UP
24	01010-81025	BOLT	1	SN: F60001-UP
25	01643-31032	WASHER	1	SN: F60001-UP
26	22B-01-31430	BRACKET	1	SN: F60001-UP
27	01010-81020	BOLT	2	SN: F60001-UP
28	01643-31032	WASHER	2	SN: F60001-UP
29	04434-51410	CLAMP	1	SN: F60001-UP
30	04434-51910	CLAMP	1	SN: F60001-UP
31	07095-40213	CUSHION	1	SN: F60001-UP
32	01010-81025	BOLT	1	SN: F60001-UP
33	01643-31032	WASHER	1	SN: F60001-UP
34	04434-51410	CLAMP	6	SN: F60001-UP

Open this exact parts catalogue on K-Part

Item	Part No.	Part Name	Qty	Options
35	01010-81025	BOLT	3	SN: F60001-UP
36	01643-31032	WASHER	3	SN: F60001-UP

Reference: B0200-001003

Open this exact parts catalogue on K-Part

Get the complete PDF catalogue

Komatsu PC138US-11E0 S/N F60001 AND UP

$89

with PayPal | Store cart: $99

Buy this PDF on Manuals Komatsu

Check the model, serial range and language before payment.

Download instructions are emailed after payment confirmation.

This free sample contains 10 catalogue pages.