Fig. 101 エンジン リレーテッド パーツ (適用号機 Serial No. 3～278)

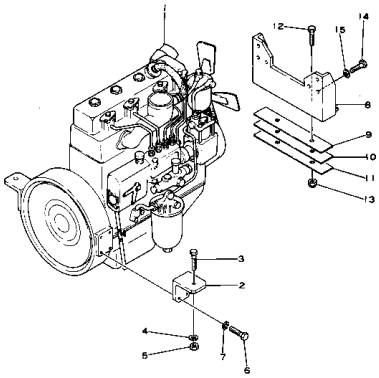

Reference: 101

030010 ENGINE RELATED PARTS (#3-278)

Item	Part No.	Part Name	Qty	Options
1	380-886611-1	ENGINE ASSEMBLY	1	SN: 195-@
1	380-885034-1	ENGINE ASSEMBLY	1	SN: 3-194
2	380-885122-2	BRACKET	2	SN: 3-278
3	380-S11028-8	SCREW	2	SN: 3-278
4	380-WF110-00	WASHER	2	SN: 3-278
5	380-E110-000	NAT	2	SN: 3-278
6	01040-71235	BOLT	8	SN: 3-278
7	380-WL18-000	WASHER	8	SN: 3-@
8	380-885599-2	BRACKET	1	SN: 3-278
9	380-885601-1	SHIM, 2.3MM	1	SN: 3-278
10	380-885602-1	SHIM, 1.6MM	1	SN: 3-278
11	380-885603-1	SHIM, 1.0MM	1	SN: 3-278
12	380-S11012-0	SCREW	2	SN: 3-278
13	380-E110-000	NAT	2	SN: 3-278
14	01040-41050	BOLT	6	SN: 3-278
15	01601-11025	WASHER	6	SN: 3-@

Reference: 101

Open this exact parts catalogue on K-Part

Fig. 101A エンジン リレーテッド パーツ (適用号機 Serial No. 279～818)

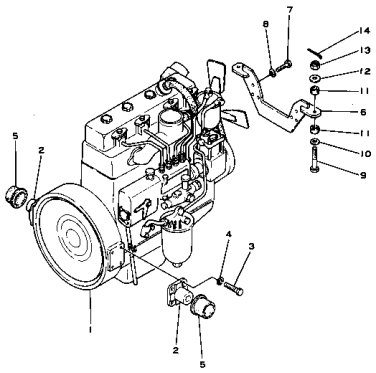

Reference: 101A

030020 ENGINE RELATED PARTS (#279-818)

Item	Part No.	Part Name	Qty	Options
1	380-888365-1	ENGINE ASSEMBLY	1	SN: 608-818
1	380-886611-1	ENGINE ASSEMBLY	1	SN: 195-607
2	380-885971-1	BRACKET	2	SN: 279-818
3	01040-71230	BOLT	8	SN: 279-818
4	380-WL18-000	WASHER	8	SN: 3-818
5	380-885974-1	RUBBER	2	SN: 279-818
6	380-887823-1	BRACKET	1	SN: 507-818
6	380-885975-1	BRACKET	1	SN: 279-506
7	01040-41055	BOLT	6	SN: 279-818
8	01601-11025	WASHER	6	SN: 3-818
9	380-887825-1	SCREW	2	SN: 507-818
9	380-886631-1	SCREW	2	SN: 279-506
10	380-WF38-000	WASHER	2	SN: 279-818
11	380-887824-1	RUBBER	4	SN: 507-818
11	380-886612-1	RUBBER	4	SN: 279-506
12	380-887826-1	WASHER	2	SN: 507-818
12	380-887722-1	WASHER	2	SN: 279-506
13	380-H78-0000	NAT	2	SN: 279-818
14	380-CP58-000	PIN	2	SN: 279-818

Reference: 101A

Open this exact parts catalogue on K-Part

Fig. 101B エンジン関連部品(適用号機 Serial No. 819～) ENGINE RELATED PARTS

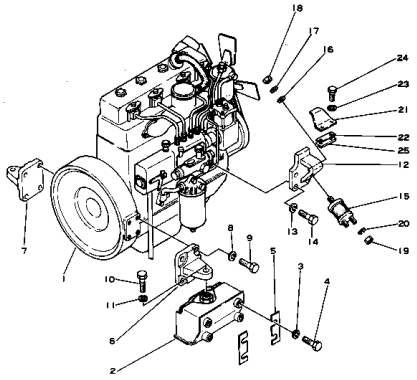

Reference: 101B

030030 ENGINE RELATED PARTS (#819-)

Item	Part No.	Part Name	Qty	Options
1	381-898636-2	ENGINE ASSEMBLY	1	SN: 4983-UP
1	381-898636-1	ENGINE ASSEMBLY	1	SN: 2371-4982
1	380-890421-1	ENGINE ASSEMBLY	1	SN: 1311-2370
1	380-888486-1	ENGINE ASSEMBLY	1	SN: 1298-1310
1	380-888486-1	ENGINE ASSEMBLY	1	SN: 1296-1296
1	380-890421-1	ENGINE ASSEMBLY	1	SN: 1289-1295
1	380-888486-1	ENGINE ASSEMBLY	1	SN: 1288-1288
1	380-890421-1	ENGINE ASSEMBLY	1	SN: 1287-1287
1	380-890421-1	ENGINE ASSEMBLY	1	SN: 1263-1274
1	380-888486-1	ENGINE ASSEMBLY	1	SN: 1262-1262
1	380-890421-1	ENGINE ASSEMBLY	1	SN: 1247-1261
1	380-888486-1	ENGINE ASSEMBLY	1	SN: 819-1246
2	381-897381-1	CUSHION	2	SN: 2576-UP
2	380-888879-1	CUSHION	2	SN: 819-2575
3	01602-01236	WASHER	8	SN: 819-UP
4	381-897382-1	BOLT	8	SN: 2576-UP
4	01000-61230	BOLT	8	SN: 819-2575
5	380-888903-1	SHIM	12	SN: 819-UP
6	380-888875-1	BRACKET	1	SN: 819-UP
7	380-888876-1	BRACKET	1	SN: 819-UP
8	01602-01236	WASHER	8	SN: 819-UP
9	01010-61230	BOLT	8	SN: 916-UP
9	01040-41230	BOLT	8	SN: 819-915
10	01050-31845	BOLT	2	SN: 963-UP
10	01000-41850	BOLT	2	SN: 819-962
11	01602-01854	WASHER	2	SN: 819-UP
12	380-888344-1	BRACKET	2	SN: 819-UP
13	01602-01030	WASHER	8	SN: 819-UP
14	01010-31030	BOLT	8	SN: 819-UP
15	380-888345-1	RUBBER	2	SN: 819-UP
16	01643-01432	WASHER	2	SN: 819-UP
17	380-WL49-000	WASHER	2	SN: 819-UP
18	01582-01411	NAT	4	SN: 819-UP
19	01582-01210	NAT	4	SN: 819-UP

Open this exact parts catalogue on K-Part

Item	Part No.	Part Name	Qty	Options
20	01602-01236	WASHER	4	SN: 819-UP
21	380-889226-1	STOP	2	SN: 819-UP
22	380-889229-1	SHIM, 1.0MM	10	SN: 819-UP
23	380-WL16-000	WASHER	4	SN: 819-UP
24	380-S168-000	BOLT	4	SN: 819-UP
25	381-897588-1	SHIM, 0.5MM	2	SN: 2764-UP

Reference: 101B

Open this exact parts catalogue on K-Part

Fig. 111 マフラ(適用号機 MUFFLER(Serial No. 3~254)

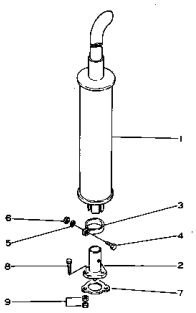

Reference: 111

030040 MUFFLER(#3-254)

Item	Part No.	Part Name	Qty	Options
	380-888316-1	MUFFLER	1	SN: 3-254
1		• ☆ MUFFLER	1	SN: 3-254
2	380-885125-1	• FLANGE	1	SN: 3-@
3		• ☆ CLAMP	1	SN: 3-254
4	380-S2612-00	• BOLT	1	SN: 3-254
5	380-WL16-000	• WASHER	1	SN: 3-254
6	380-H26-0000	• NAT	1	SN: 3-254
7	380-887082-1	GASKET	1	SN: 3-@
8	380-S2714-00	SCREW	3	SN: 3-@
9	380-887079-1	NAT	6	SN: 3-@

Catalog signs: ☆ not supplied separately: assembly only

Reference: 111

Open this exact parts catalogue on K-Part

Fig. 111A マフラ (適用号機 Serial No. 255~)

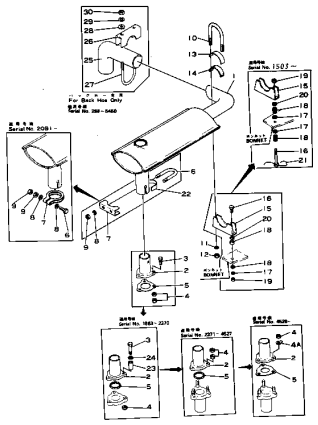

Reference: 111A

030050 MUFFLER(#255-)

Item	Part No.	Part Name	Qty	Options
1	380-886719-2	MUFFLER	1	SN: 6001-UP
1	380-886719-1	MUFFLER	1	SN: 255-5999
2	380-885125-1	FLANGE	1	SN: 3-UP
3	380-S2730-00	SCREW	3	SN: 1863-2370
3	380-S2718-00	SCREW	3	SN: 3-1862
4	381-970952-1	NAT	3	SN: 4528-UP
4	01501-61006	NAT	6	SN: 2371-4527
4	380-887079-1	NAT	6	SN: 2151-2370
4	380-890401-1	NAT	3	SN: 1863-2150
4	380-887079-1	NAT	6	SN: 3-1862
4A	01650-01012	WASHER	3	SN: 4528-UP
5	381-970951-1	GASKET	1	SN: 4528-UP
5	380-890404-1	■ LINK (381-970951-1,381-970952-1(3), 01650-01012(3))	1	SN: 1863-4527
5	380-887082-1	GASKET	1	SN: 3-1862
6	380-S2634-00	SCREW	1	SN: 2091-UP
6	380-887083-1	■ U BOLT (381-898017-1,380-S2634-00, 01643-01032(2),380-H26-000(2))	1	SN: 255-2090
7	381-898017-1	CLAMP	1	SN: 2091-UP
7	380-887081-1	■ CLAMP (381-898017-1,380-S2634-00, 01643-01032(2),380-H26-000(2))	1	SN: 255-2090
8	01643-01032	WASHER	2	SN: 2091-UP
8	380-WL15-000	WASHER	2	SN: 255-2090
9	380-H26-0000	NAT	2	SN: 2091-UP
9	380-H25-0000	NAT	2	SN: 255-2090
10	380-890009-1	U BOLT	1	SN: 1503-UP
10	380-886709-1	U BOLT	1	SN: 255-1502
11	380-WL15-000	WASHER	2	SN: 255-UP
12	380-H25-0000	NAT	2	SN: 255-UP
13	380-886623-1	PLATE	1	SN: 255-1502
14	380-886622-1	INSULATOR	1	SN: 255-1502
15	380-886704-1	BRACKET	1	SN: 255-UP
16	380-S2516D-0	SCREW	2	SN: 1503-UP
16	380-S2516-00	SCREW	2	SN: 255-1502
17	380-887227-1	WASHER	4	SN: 1503-UP
17	380-887227-1	WASHER	2	SN: 255-1502
18	380-886561-1	CUSHION	4	SN: 1503-UP
18	380-890010-1	☒ SPRING	4	SN: (1503-25711)
18	380-886561-1	CUSHION	4	SN: 255-1502
19	380-H25-0000	NAT	2	SN: 1503-UP
19	380-E25-0000	NAT	2	SN: 255-1502
20	380-887775-1	WASHER	2	SN: 255-UP
21	380-LW169-00	WOW	1	SN: 1503-UP
22	380-886623-1	PLATE	1	SN: 3-2090

Open this exact parts catalogue on K-Part

Item	Part No.	Part Name	Qty	Options
23	380-890402-1	TUBE	2	SN: 1863-2370
24	380-WF37-000	WASHER	3	SN: 1863-2370
25	380-889686-1	STACK, (FOR BACK HOE)	1	SN: 266-5450
26	380-886472-1	CLAMP, (FOR BACK HOE)	1	SN: 266-5450
27	380-886471-1	U BOLT, (FOR BACK HOE)	1	SN: 266-5450
28	380-WF15-000	WASHER, (FOR BACK HOE)	2	SN: 266-5450
29	380-WL15-000	WASHER, (FOR BACK HOE)	2	SN: 266-5450
30	380-H15-0000	NUT,(FOR BACK HOE)	2	SN: 266-5450

Catalog signs: ■ may be used instead of described part ☒ discontinued: use part above

Reference: 111A

Open this exact parts catalogue on K-Part

Fig. 112 ラジエータ (適用号機 Serial No. 3--)

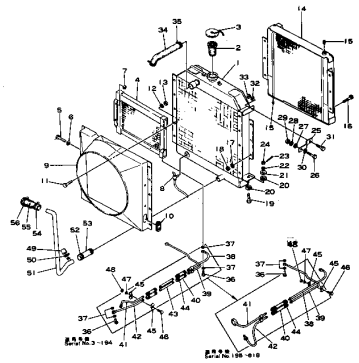

Reference: 112

030060 RADIATOR

Item	Part No.	Part Name	Qty	Options
	380-889378-3	RADIATOR ASSEMBLY	1	SN: 2452-UP
	380-889378-2	☐ RADIATOR ASSEMBLY	1	SN: 1491-2451
	380-889378-1	☐ RADIATOR ASSEMBLY XX SPEL	1	SN: 1122-1490
	380-888463-1	☐ RADIATOR ASSEMBLY	1	SN: 1121-1121
	380-889378-1	☐ RADIATOR ASSEMBLY XX SPEL	1	SN: 1119-1120
	380-888463-1	☐ RADIATOR ASSEMBLY	1	SN: 819-1118
	380-885901-1	☐ RADIATOR ASSEMBLY	1	SN: 3-818
	381-897038-1	• RADIATOR	1	SN: 819-UP
1	380-889192-2	• • CORE	1	SN: 2452-UP
1	380-889192-1	• • ☐ CORE	1	SN: 1122-2451
1	380-888812-1	• • ■ CORE (380-889192-2,380-889193-1)	1	SN: 1121-1121
1	380-889192-1	• • ☐ CORE	1	SN: 1119-1120
1	380-888812-1	• • ■ CORE (380-889192-2,380-889193-1)	1	SN: 819-1118
1	380-885184-1	• • CORE	1	SN: 3-818
2	380-887220-1	• • STRAINER	1	SN: 3-UP
3	380-885255-4	• • CAP	1	SN: 3-UP
4	380-885215-2	• • OIL COOLER, ENGINE	1	SN: 3-818
5	380-S154-000	• • BOLT	4	SN: 3-818
6	380-WL15-000	• • WASHER	4	SN: 3-818
7	380-H15-0000	• • NAT	4	SN: 3-818
8	380-885207-2	• • VALVE	1	SN: 1491-UP
8	380-885207-1	• • ☐ VALVE	1	SN: 3-1490
9	380-890049-1	• • SHROUD	1	SN: 1491-UP
9	380-889193-1	• • SHROUD	1	SN: 1119-1490
9	380-888813-1	• • SHROUD	1	SN: 819-1118
9	380-885902-1	• • SHROUD	1	SN: 3-818
10	380-885218-1	• • GROMMET	1	SN: 3-818
11	380-S155-000	• • BOLT	6	SN: 1491-UP
11	380-S155-000	• • BOLT	10	SN: 3-1490
12	380-WL15-000	• • WASHER	6	SN: 1491-UP
12	380-WL15-000	• • WASHER	10	SN: 3-1490
13	380-H15-0000	• • NAT	6	SN: 1491-UP
13	380-H15-0000	• • NAT	10	SN: 3-1490
14	380-888814-1	• OIL COOLER ASSEMBLY, TORQUE CONVERTER	1	SN: 819-UP
14	380-885214-1	• ☐ OIL COOLER ASSEMBLY, TORQUE CONVERTER	1	SN: 3-818
15	07042-00211	• PLUG	2	SN: 3-UP
16	380-S155-000	• BOLT	6	SN: 3-UP
17	380-WL15-000	• WASHER	6	SN: 3-UP
18	380-H15-0000	• NAT	6	SN: 3-UP
19	380-885187-1	BOLT	2	SN: 3-UP
20	380-885185-1	WASHER	4	SN: 3-UP
21	380-885186-1	WASHER	2	SN: 3-UP
22	380-WF18-000	WASHER	2	SN: 3-UP
23	380-CP39-000	PIN	2	SN: 3-UP

Open this exact parts catalogue on K-Part

Item	Part No.	Part Name	Qty	Options
24	380-H78-0000	NAT	2	SN: 3-UP
25	380-885188-2	SUPPORT	2	SN: 531-UP
25	380-885188-1	■ SUPPORT (380-885188-2(2),380-885427-2(2))	2	SN: 3-530
26	380-S168-000	BOLT	2	SN: .-UP
26	380-S167-000	■ BOLT (380-S168-000(2)),01643-01032(2), 380-WF16-000(2))	2	SN: 3-.
27	380-WF16-000	WASHER	2	SN: .-UP
27	380-WF36-000	□ WASHER	2	SN: 3-.
28	380-WL16-000	WASHER	2	SN: 3-UP
29	380-H16-0000	NAT	2	SN: 3-UP
30	01643-01032	WASHER	2	SN: .-UP
31	380-885427-2	BOLT	2	SN: 531-UP
31	380-885427-1	■ BOLT (380-885427-2(2),380-885188-2(2))	2	SN: 3-530
32	380-WL16-000	WASHER	2	SN: 3-UP
33	380-H16-0000	NAT	2	SN: 3-UP
34	380-885202-3	HOSE	1	SN: 1491-UP
34	380-885202-2	□ HOSE	1	SN: 3-1490
35	382-279026-1	CLAMP	2	SN: ..-UP
35	381-970978-1	□ CLAMP	2	SN: .-..
35	07280-06029	□ CLAMP	2	SN: 3-.
36	07206-01518	BOLT	2	SN: 195-818
36	07206-01518	BOLT	4	SN: 3-194
37	07003-01824	GASKET	4	SN: 195-818
37	07003-01824	GASKET	8	SN: 3-194
38	380-886659-1	TUBE	1	SN: 195-818
38	380-885906-1	TUBE	1	SN: 3-194
39	380-886660-1	TUBE	1	SN: 195-818
39	380-885908-1	TUBE	1	SN: 3-194
40	380-886666-1	HOSE	2	SN: 195-818
40	380-886774-1	HOSE	4	SN: 3-194
41	380-886658-2	TUBE	1	SN: 195-818
41	380-885907-1	TUBE	1	SN: 3-194
42	380-886661-1	TUBE	1	SN: 195-818
42	380-885905-1	TUBE	1	SN: 3-194
43	380-886999-1	TUBE	2	SN: 3-194
44	380-886989-1	CLAMP	4	SN: 195-818
44	380-886989-1	CLAMP	8	SN: 3-194
45	380-885904-1	CLAMP	4	SN: 3-818
46	380-S158-000	BOLT	2	SN: 3-818
47	380-WL15-000	WASHER	2	SN: 3-818
48	380-H15-0000	NAT	2	SN: 3-818
49	380-886498-1	CAP	1	SN: 183-7037
49	380-885225-1	CAP	1	SN: 3-182
50	07280-02323	CLAMP	1	SN: 3-7037
51	381-970672-2	PIPE	1	SN: 7038-UP
51	380-887228-1	□ TUBE, OUTLET	1	SN: 183-7037
51	380-886887-1	■ TUBE, OUTLET (380-887228-1,380-886498-1, 07280-02323)	1	SN: 3-182
52	382-279038-1	CLAMP	2	SN: ..-UP
52	381-970979-1	□ CLAMP	2	SN: .-..
52	07280-05729	□ CLAMP	2	SN: 3-.
53	380-886889-1	HOSE	1	SN: 3-UP
54	382-279038-1	CLAMP	1	SN: ..-UP
54	381-970979-1	□ CLAMP	1	SN: .-..
54	07280-05729	□ CLAMP	1	SN: 3-.
55	380-886888-1	HOSE	1	SN: 3-UP
56	382-279028-1	CLAMP	1	SN: ..-UP
56	381-970976-1	□ CLAMP	1	SN: .-..
56	07280-06929	□ CLAMP	1	SN: 3-.

Catalog signs: □ part above may be used instead ■ may be used instead of described part

Reference: 112

Open this exact parts catalogue on K-Part

Fig. 113 エアー クリーナ (適用号機 Serial No. 3～)

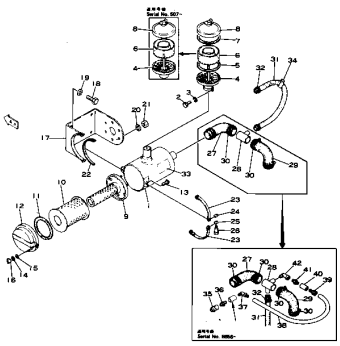

Reference: 113

030070 AIR CLEANER

Item	Part No.	Part Name	Qty	Options
	380-888466-1	AIR CLEANER ASSEMBLY	1	SN: 819-UP
	380-887696-1	■ AIR CLEANER ASSEMBLY (380-888466-1,380-888460-1, 380-888461-1(2))	1	SN: 507-818
	380-885133-1	AIR CLEANER ASSEMBLY	1	SN: 3-506
1		• ☆ CASE	1	SN: 819-UP
1	380-887697-1	• CASE	1	SN: 507-818
1	380-885576-1	• CASE	1	SN: 3-506
2	380-885588-1	• SCREW	1	SN: 3-506
3	01601-11025	• WASHER	1	SN: 3-506
	380-887092-1	• CYCLONE ASSEMBLY	1	SN: 507-UP
4	380-887120-1	• • PIPE	1	SN: 507-UP
4	380-885583-1	• • PIPE	1	SN: 3-506
5	380-885584-1	• • GASKET	1	SN: 3-506
6	380-887119-1	• • CASE	1	SN: 507-UP
6	380-885585-1	• • CASE	1	SN: 3-506
7	380-885586-1	• • GASKET	1	SN: 3-506
8	380-887118-1	• • COVER	1	SN: 507-UP
8	380-885587-1	• • COVER	1	SN: 3-506
9	380-888593-1	• ELEMENT, INNER	1	SN: 819-UP
9	380-885579-1	• ELEMENT, INNER	1	SN: 3-818
10	380-888592-1	• ELEMENT, OUTER	1	SN: 819-UP
10	380-885578-1	• ELEMENT, OUTER	1	SN: 3-818
11	380-888594-1	• GASKET	1	SN: 819-UP
11	380-885580-1	• GASKET	1	SN: 3-818
12	380-888591-1	• COVER	1	SN: 819-UP
12	380-885577-1	• COVER	1	SN: 3-818
13	380-885581-1	• BOLT	2	SN: 3-UP
14	01601-00820	• WASHER	2	SN: 3-UP
15	01640-20816	• WASHER	2	SN: 3-UP
16	380-885582-1	• NAT	2	SN: 3-UP
17	380-888460-1	BRACKET	1	SN: 819-UP
17	380-885134-1	BRACKET	1	SN: 3-818
18	380-S278-000	SCREW	4	SN: 3-UP
19	380-WL17-000	WASHER	4	SN: 3-UP
20	380-WL15-000	WASHER	6	SN: 3-UP
21	01500-30807	NAT	6	SN: 3-UP
22	380-885135-1	PAD	1	SN: 3-UP
23	380-888461-1	BAND	2	SN: 819-UP
23	380-885136-1	BAND	2	SN: 3-818
24	380-885137-1	PIN	1	SN: 3-UP
25	380-885138-1	PIN	1	SN: 3-UP
26	380-885139-1	BOLT	1	SN: 3-UP
27	380-885140-1	HOSE	1	SN: 3-UP
28	381-898166-1	PIPE	1	SN: 8656-UP
28	380-885141-1	PIPE	1	SN: 3-8655
29	380-886894-1	HOSE	1	SN: 3-UP

Open this exact parts catalogue on K-Part

Get the complete PDF catalogue

Komatsu JH30B-1 (JPN) CHASSIS ONLY S/N 3-UP (JAPANESE)

$89

with PayPal | Store cart: $99

Buy this PDF on Manuals Komatsu

Check the model, serial range and language before payment.

Download instructions are emailed after payment confirmation.

This free sample contains 10 catalogue pages.