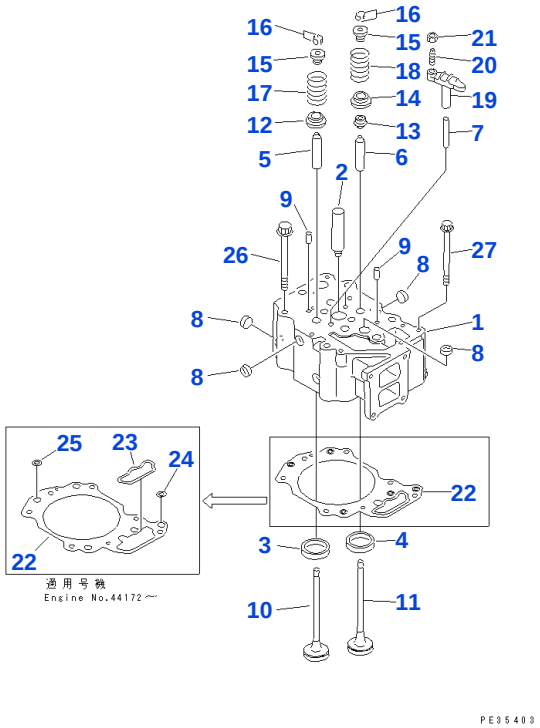

Reference: A1010-A3A1

030010 CYLINDER HEAD

Item	Part No.	Part Name	Qty	Options
	6151-11-1100	CYLINDER HEAD ASSEMBLY, WITHOUT VALVE	6	SN: 21000-UP
1		• ☆ HEAD, CYLINDER	1	SN: 21000-UP
2	6136-11-1130	• SLEEVE	1	SN: 21000-UP
3	6150-11-1331	• INSERT, INTAKE VALVE (STD)	2	SN: 21000-UP
3	6150-19-1331	• INSERT, 0.25MM, INTAKE VALVE (OS)	2	SN: 21000-UP
3	6150-18-1331	• INSERT, 0.50MM, INTAKE VALVE (OS)	2	SN: 21000-UP
3	6150-17-1331	• INSERT, 0.75MM, INTAKE VALVE (OS)	2	SN: 21000-UP
3	6150-16-1331	• INSERT, 1.00MM, INTAKE VALVE (OS)	2	SN: 21000-UP
4	6150-11-1320	• INSERT, EXHAUST VALVE (STD)	2	SN: 21000-UP
4	6150-19-1320	• INSERT, 0.25MM, EXHAUST VALVE (OS)	2	SN: 21000-UP
4	6150-18-1320	• INSERT, 0.50MM, EXHAUST VALVE (OS)	2	SN: 21000-UP
4	6150-17-1320	• INSERT, 0.75MM, EXHAUST VALVE (OS)	2	SN: 21000-UP
4	6150-16-1320	• INSERT, 1.00MM, EXHAUST VALVE (OS)	2	SN: 21000-UP
5	6150-12-1341	• GUIDE, INTAKE VALVE	2	SN: 21000-UP
6	6150-12-1351	• GUIDE, EXHAUST VALVE	2	SN: 21000-UP
7	6150-11-1140	• GUIDE	2	SN: 21000-UP
8	6162-13-1150	• PLUG	8	SN: 21000-UP
9	04020-00820	• PIN, DOWEL	2	SN: 21000-UP
10	6150-41-4111	VALVE, INTAKE	12	SN: 21000-UP
11	6150-41-4210	VALVE, EXHAUST	12	SN: 21000-UP
12	6150-41-4540	ROTATOR, INTAKE VALVE	12	SN: 21000-UP
13	6150-41-4560	SEAL, EXHAUST VALVE	12	SN: 42035-UP
13	6140-41-4540	□ SEAL	12	SN: 21000-42034
14	6150-41-4430	SEAT, LOWER	12	SN: 21000-UP
15	6150-41-4510	SEAT, UPPER	24	SN: 21000-UP
16	6136-42-4520	COTTER	48	SN: 21000-UP
17	6150-41-4420	SPRING, INTAKE	12	SN: 21000-UP
18	6150-41-4411	SPRING, EXHAUST	12	SN: 21000-UP
	6150-41-5600	CROSSHEAD ASSEMBLY	12	SN: 21000-UP
19	6150-41-5611	• CROSSHEAD	1	SN: 21000-UP
20	6150-41-5620	• SCREW	1	SN: 21000-UP
21	6150-41-5630	• NAT	1	SN: 21000-UP
22	6150-17-1813	GASKET, HEAD	6	SN: 48544-UP
22	6150-17-1812	□ GASKET, HEAD	6	SN: 44172-48543

Open this exact parts catalogue on K-Part

Item	Part No.	Part Name	Qty	Options
22	6150-11-1812	☐ GASKET, HEAD	6	SN: 25415-44171
22	6150-11-1811	☐ GASKET, HEAD	6	SN: 21000-25414
23	6150-11-1920	• GROMMET, OIL	1	SN: 44172-UP
24	6150-11-1930	• GROMMET, OIL	1	SN: 44172-UP
25		• ☆ GROMMET, WATER	4	SN: 48544-UP
25	6150-11-1940	• GROMMET, WATER	4	SN: 44172-48543
26	6150-11-1610	BOLT	36	SN: 21000-UP
27	01438-01020	BOLT	6	SN: 48544-UP
27	6150-81-9160	◆ BOLT	6	SN: 21000-48543

Catalog signs: ☆ not supplied separately: assembly only ☐ part above may be used instead ◆ interchangeable with part above

Reference: A1010-A3A1

Open this exact parts catalogue on K-Part

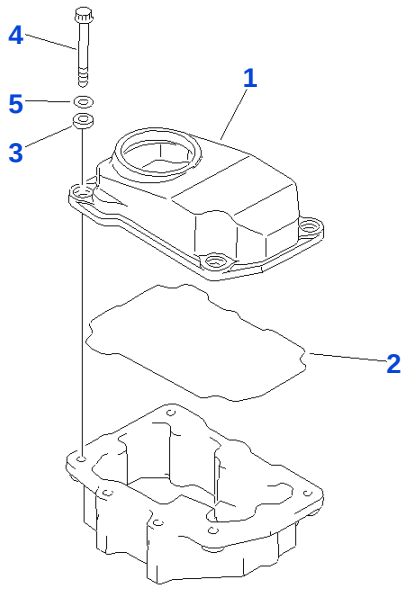

PE38392

Reference: A1110-A3A1

030020 HEAD COVER

Item	Part No.	Part Name	Qty	Options
1	6150-11-8111	COVER, HEAD	6	SN: 21000-UP
2	6150-11-8810	GASKET	6	SN: 21000-UP
3	6150-11-8820	RUBBER	24	SN: 21000-UP
4	6150-81-9370	BOLT	24	SN: 21000-UP
5	01640-21016	WASHER	24	SN: 21000-UP

Reference: A1110-A3A1

Open this exact parts catalogue on K-Part

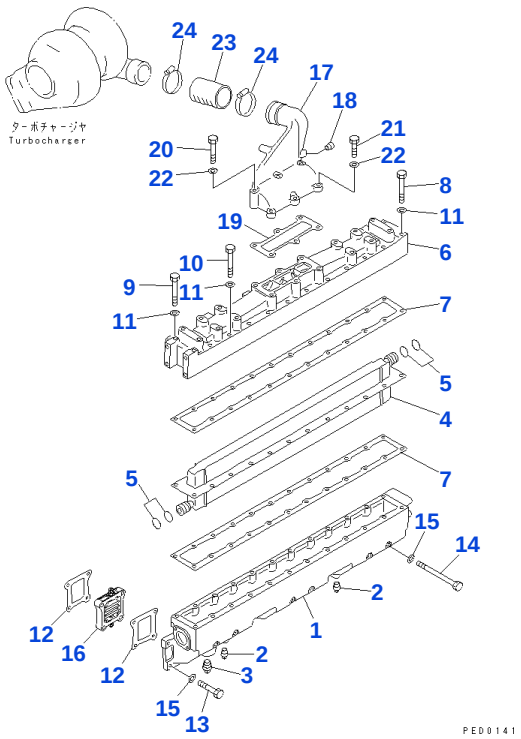

Reference: A1310-A3C9

030030 AIR INTAKE MANIFOLD AND AFTER COOLER

Item	Part No.	Part Name	Qty	Options
	6152-61-6100	AFTER COOLER ASSEMBLY	1	SN: 21000-UP
	6152-11-4910	• MANIFOLD ASSEMBLY	1	SN: 21000-UP
1	6152-11-4110	• • MANIFOLD, AIR INTAKE	1	SN: 21000-UP
2	07042-00108	• • PLUG	2	SN: 21000-UP
3	07042-00415	• • PLUG	1	SN: 21000-UP
4	6152-61-6110	• CORE	1	SN: 21000-UP
5	6162-63-6240	• O RING	4	SN: 21000-UP
6	6152-11-4210	• COVER	1	SN: 21000-UP
7	6152-11-4731	• GASKET	2	SN: 59214-UP
7	6152-11-4710	• ◆ GASKET	2	SN: 21000-59213
8	01010-50890	• BOLT	2	SN: 21000-UP
9	01011-30800	• BOLT	2	SN: 21000-UP
10	6150-81-8510	• BOLT	20	SN: 21000-UP
11	01641-20812	• WASHER	24	SN: 21000-UP
12	6150-11-4810	GASKET	12	SN: 21000-UP
13	01010-51050	BOLT	18	SN: 21000-UP
14	01011-51055	BOLT	6	SN: 21000-UP
15	01640-21016	WASHER	24	SN: 21000-UP
16	600-815-3820	HEATER, RIBBON	6	SN: 21000-UP
17	6152-11-4340	CONNECTOR, AIR	1	SN: 21000-UP
18	02720-20204	PLUG	1	SN: 21000-UP
19	6152-11-4721	GASKET	1	SN: 26187-UP
19	6152-11-4720	□ GASKET	1	SN: 21000-26186
20	01010-51075	BOLT	3	SN: 21000-UP
21	01010-51035	BOLT	3	SN: 21000-UP
22	01640-21016	WASHER	6	SN: 21000-UP
23	6151-11-4410	HOSE	1	SN: 21000-UP
24	07281-01029	CLAMP	2	SN: 21000-UP

Catalog signs: ◆ interchangeable with part above □ part above may be used instead

Reference: A1310-A3C9

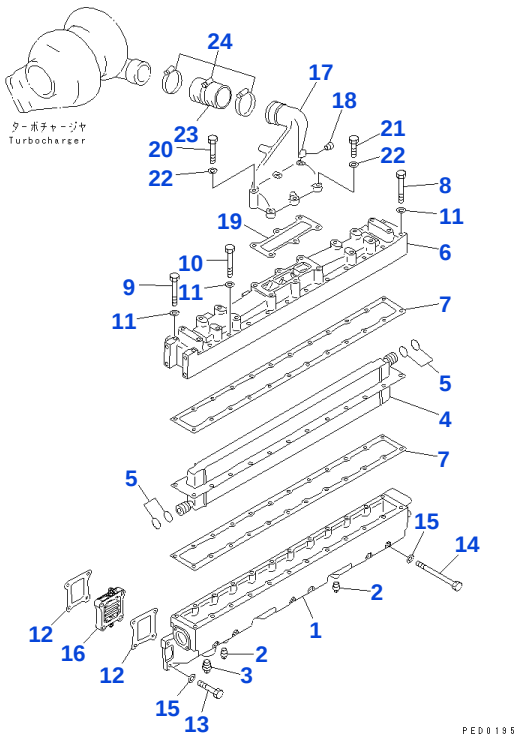

Reference: A1310-A3E8

030040 AIR INTAKE MANIFOLD AND AFTER COOLER

Item	Part No.	Part Name	Qty	Options
	6152-61-6100	AFTER COOLER ASSEMBLY	1	SN: 21000-UP
	6152-11-4910	• MANIFOLD ASSEMBLY	1	SN: 21000-UP
1	6152-11-4110	• • MANIFOLD, AIR INTAKE	1	SN: 21000-UP
2	07042-00108	• • PLUG	2	SN: 21000-UP
3	07042-00415	• • PLUG	1	SN: 21000-UP
4	6152-61-6110	• CORE	1	SN: 21000-UP
5	6162-63-6240	• O RING	4	SN: 21000-UP
6	6152-11-4210	• COVER	1	SN: 21000-UP
7	6152-11-4731	• GASKET	2	SN: 59214-UP
7	6152-11-4710	• ◆ GASKET	2	SN: 21000-59213
8	01010-50890	• BOLT	2	SN: 21000-UP
9	01011-30800	• BOLT	2	SN: 21000-UP
10	6150-81-8510	• BOLT	20	SN: 21000-UP
11	01641-20812	• WASHER	24	SN: 21000-UP
12	6150-11-4810	GASKET	12	SN: 21000-UP
13	01010-51050	BOLT	18	SN: 21000-UP
14	01011-51055	BOLT	6	SN: 21000-UP
15	01640-21016	WASHER	24	SN: 21000-UP
16	600-815-3820	HEATER, RIBBON	6	SN: 21000-UP
17	6152-11-4340	CONNECTOR, AIR	1	SN: 21000-UP
18	02720-20204	PLUG	1	SN: 21000-UP
19	6152-11-4721	GASKET	1	SN: 26187-UP
19	6152-11-4720	□ GASKET	1	SN: 21000-26186
20	01010-51075	BOLT	3	SN: 21000-UP
21	01010-51035	BOLT	3	SN: 21000-UP
22	01640-21016	WASHER	6	SN: 21000-UP
23	6151-11-4410	HOSE	1	SN: 21000-UP
24	07281-01029	CLAMP	3	SN: 21000-UP

Catalog signs: ◆ interchangeable with part above □ part above may be used instead

Reference: A1310-A3E8

Open this exact parts catalogue on K-Part

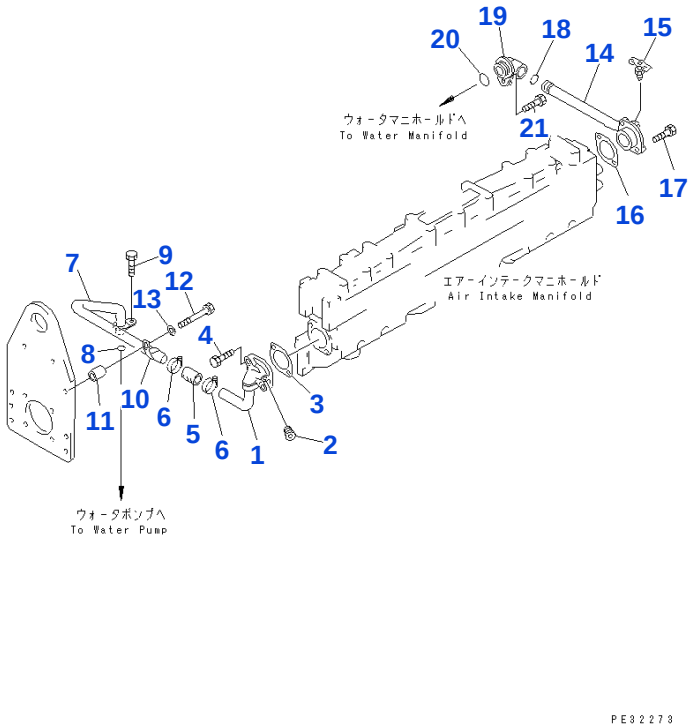

Reference: A1310-B3C9

030050 AFTER COOLER WATER PIPING

Item	Part No.	Part Name	Qty	Options
1	6152-61-6420	PIPE	1	SN: 21000-UP
2	02720-20204	PLUG	1	SN: 21000-UP
3	6152-61-6721	GASKET	1	SN: 26187-UP
3	6152-61-6720	☐ GASKET	1	SN: 21000-26186
4	01010-51035	BOLT	2	SN: 21000-UP
5	07260-22008	HOSE	1	SN: 21000-UP
6	07281-00359	CLAMP	2	SN: 21000-UP
7	6152-61-6410	PIPE	1	SN: 21000-UP
8	07000-02021	O RING	1	SN: 21000-UP
9	01010-51020	BOLT	1	SN: 21000-UP
10	6152-61-6910	CLIP	1	SN: 21000-UP
11	113-03-21170	SPACER	1	SN: 21000-UP
12	01010-51050	BOLT	1	SN: 21000-UP
13	01640-21016	WASHER	1	SN: 21000-UP
14	6152-61-6510	PIPE	1	SN: 21000-UP
15	07062-00000	VALVE	1	SN: 21000-UP
16	6152-61-6721	GASKET	1	SN: 26187-UP
16	6152-61-6720	☐ GASKET	1	SN: 21000-26186
17	01010-51035	BOLT	2	SN: 21000-UP
18	07000-A2021	O RING	1	SN: 52052-UP
18	07000-02021	☐ O RING	1	SN: 21000-52051
19	6152-61-6630	ERBO	1	SN: 21000-UP
20	07000-A3030	O RING	1	SN: 52052-UP
20	07000-03030	☐ O RING	1	SN: 21000-52051
21	01010-51025	BOLT	1	SN: 21000-UP

Catalog signs: ☐ part above may be used instead

Reference: A1310-B3C9

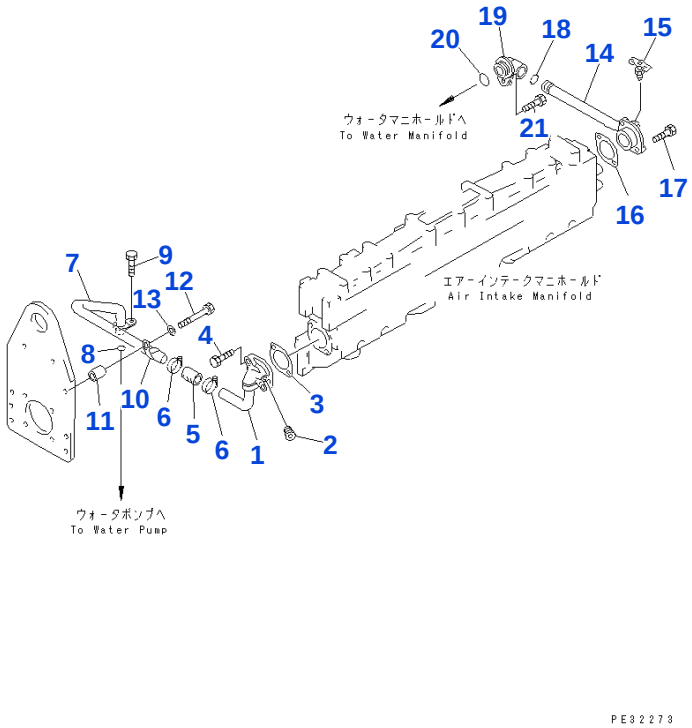

Reference: A1310-B3E8

030060 AFTER COOLER WATER PIPING

Item	Part No.	Part Name	Qty	Options
1	6152-61-6420	PIPE	1	SN: 21000-UP
2	02720-20204	PLUG	1	SN: 21000-UP
3	6152-61-6721	GASKET	1	SN: 26187-UP
3	6152-61-6720	☐ GASKET	1	SN: 21000-26186
4	01010-51035	BOLT	2	SN: 21000-UP
5	07260-22008	HOSE	1	SN: 21000-UP
6	07281-00359	CLAMP	2	SN: 21000-UP
7	6152-61-6410	PIPE	1	SN: 21000-UP
8	07000-02021	O RING	1	SN: 21000-UP
9	01010-51020	BOLT	1	SN: 21000-UP
10	6152-61-6910	CLIP	1	SN: 21000-UP
11	113-03-21170	SPACER	1	SN: 21000-UP
12	01010-51050	BOLT	1	SN: 21000-UP
13	01640-21016	WASHER	1	SN: 21000-UP
14	6152-61-6510	PIPE	1	SN: 21000-UP
15	07062-00000	VALVE	1	SN: 21000-UP
16	6152-61-6721	GASKET	1	SN: 26187-UP
16	6152-61-6720	☐ GASKET	1	SN: 21000-26186
17	01010-51035	BOLT	2	SN: 21000-UP
18	07000-A2021	O RING	1	SN: 52052-UP
18	07000-02021	☐ O RING	1	SN: 21000-52051
19	6152-61-6630	ERBO	1	SN: 21000-UP
20	07000-A3030	O RING	1	SN: 52052-UP
20	07000-03030	☐ O RING	1	SN: 21000-52051
21	01010-51025	BOLT	1	SN: 21000-UP

Catalog signs: ☐ part above may be used instead

Reference: A1310-B3E8

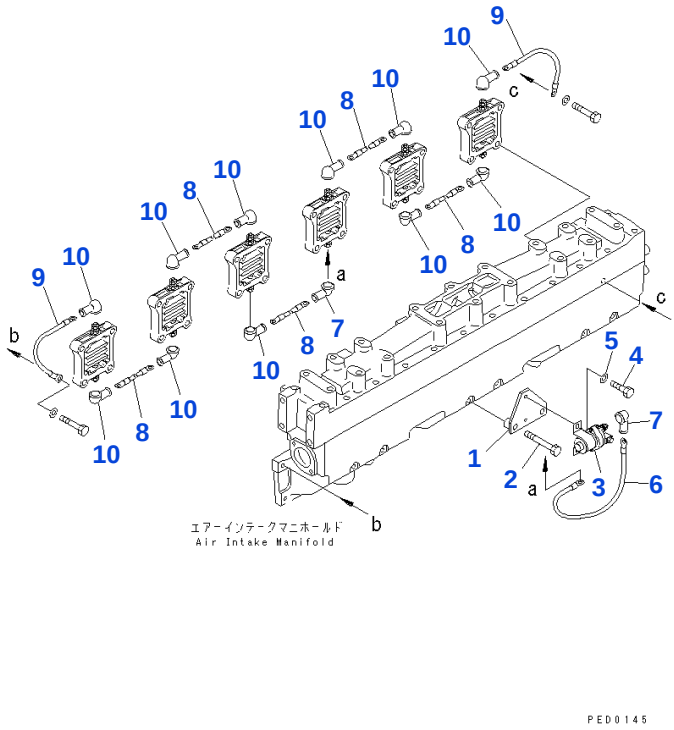

Reference: A1370-A3B7

030070 HEATER SWITCH

Item	Part No.	Part Name	Qty	Options
1	6152-81-4520	BRACKET	1	SN: 21000-UP
2	01011-51075	BOLT	2	SN: 21000-UP
3	600-815-2170	SWITCH	1	SN: 21000-UP
4	01010-50616	BOLT	2	SN: 21000-UP
5	01640-20610	WASHER	2	SN: 21000-UP
6	6151-81-4410	WIRE, 265MM	1	SN: 21000-UP
7	6134-81-4910	CAP	2	SN: 21000-UP
8	6151-81-4450	WIRE, 160MM	5	SN: 21000-UP
9	6678-81-4340	WIRE, 170MM	2	SN: 21000-UP
10	08038-00519	CAP	11	SN: 21000-UP

Reference: A1370-A3B7

Open this exact parts catalogue on K-Part

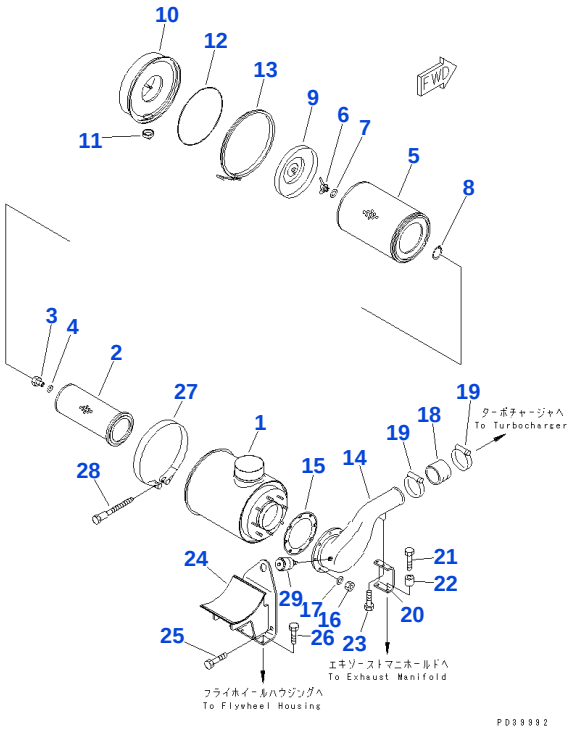

Reference: A1410-A3E1

030080 AIR CLEANER

Item	Part No.	Part Name	Qty	Options
	6711-81-7100	AIR CLEANER ASSEMBLY	1	SN: 21000-UP
1	6711-81-7110	• BODY	1	SN: 21000-UP
	6125-81-7032	• ELEMENT ASSEMBLY	1	SN: 21000-UP
2		• • ☆ ELEMENT, INNER	1	SN: 21000-UP
3	600-181-9671	• • NAT	1	SN: 21000-UP
4	600-181-7511	• • WASHER, SEAL	1	SN: 21000-UP
	600-181-4300	• • ELEMENT ASSEMBLY, OUTER	1	SN: 21000-UP
5		• • • ☆ ELEMENT, OUTER	1	SN: 21000-UP
6	600-181-1990	• • • NUT, WING	1	SN: 21000-UP
7	600-181-4591	• • • WASHER, SEAL	1	SN: 21000-UP
8	04064-01510	• • • RING, SNAP	1	SN: 21000-UP
9	6710-82-7130	• BAFFLE	1	SN: 21000-UP
10	6710-82-7121	• CUP	1	SN: 21000-UP
11	600-181-1590	• VALVE	1	SN: 21000-UP
12	6127-81-7190	• O RING	1	SN: 21000-UP
13	600-181-1480	• CLAMP	1	SN: 21000-UP
14	6151-11-4250	CONNECTOR	1	SN: 21000-UP
15	6127-81-4824	GASKET	1	SN: 27785-UP
15	6127-81-4821	□ GASKET	1	SN: 21000-27784
16	01580-11008	NAT	8	SN: 21000-UP
17	01640-21016	WASHER	8	SN: 21000-UP
18	6151-11-4450	HOSE	1	SN: 21000-UP
19	07281-01159	CLAMP	2	SN: 21000-UP
20	6151-11-4620	BRACKET	1	SN: 21000-UP
21	01010-31040	BOLT	2	SN: 21000-UP
22	6631-11-5630	SPACER	2	SN: 21000-UP
23	01010-51025	BOLT	2	SN: 21000-UP
24	6151-11-4550	BRACKET	1	SN: 21000-UP
25	01010-51665	BOLT	2	SN: 21000-UP
26	01010-51025	BOLT	4	SN: 21000-UP
27	6691-13-4610	BAND ASSEMBLY	1	SN: 21000-UP
27	6691-21-6560	• PIN, WITH THREAD	1	SN: 21000-UP
27	6691-21-6550	• PIN	1	SN: 21000-UP
28	6643-11-4641	BOLT	1	SN: 21000-UP

Open this exact parts catalogue on K-Part

Item	Part No.	Part Name	Qty	Options
29	08670-02001	INDICATOR, DUST	1	SN: 21000-UP

Catalog signs: ☆ not supplied separately: assembly only ☐ part above may be used instead

Reference: A1410-A3E1

Open this exact parts catalogue on K-Part

Get the complete PDF catalogue

Komatsu SA6D125-1G3 (JPN) G-SA6D125-1G3-V1 FOR GENERATOR ALASKA DIESEL S/N 21000-UP (JAPANESE)

$89

with PayPal | Store cart: $99

Buy this PDF on Manuals Komatsu

Check the model, serial range and language before payment.

Download instructions are emailed after payment confirmation.

This free sample contains 10 catalogue pages.