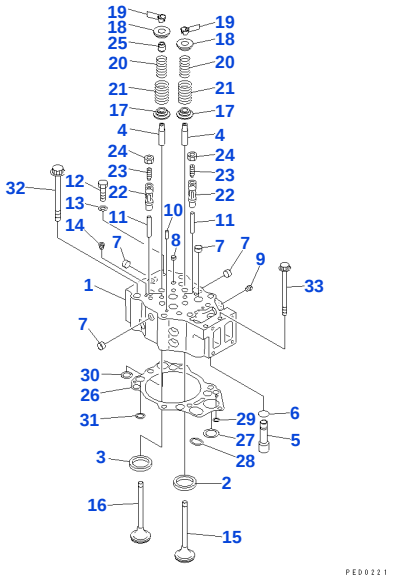

Reference: A1010-A4A3

030010 CYLINDER HEAD (#11000-17145)

Item	Part No.	Part Name	Qty	Options
	6211-11-1101	CYLINDER HEAD ASSEMBLY, WITHOUT VALVE	6	SN: 17056-17145
	6211-11-1100	■ CYLINDER HEAD ASSEMBLY, WITHOUT VALVE (6211-11-1101,01010-51016, 07003-01015)	6	SN: 11000-17055
1		• ☆ HEAD, CYLINDER	1	SN: 17056-17145
1		• ☆ HEAD, CYLINDER	1	SN: 11000-17055
2	6210-11-1330	• INSERT, INTAKE VALVE (STD)	2	SN: 11000-@
2	6210-19-1330	• INSERT, 0.25MM, INTAKE VALVE (OS)	2	SN: 11000-@
2	6210-18-1330	• INSERT, 0.50MM, INTAKE VALVE (OS)	2	SN: 11000-@
2	6210-17-1330	• INSERT, 0.75MM, INTAKE VALVE (OS)	2	SN: 11000-@
2	6210-16-1330	• INSERT, 1.00MM, INTAKE VALVE (OS)	2	SN: 11000-@
3	6210-11-1321	• INSERT, EXHAUST VALVE (STD)	2	SN: 16029-@
3	6210-11-1320	• □ INSERT, EXHAUST VALVE (STD)	2	SN: 11000-16028
3	6210-19-1321	• INSERT, 0.25MM, EXHAUST VALVE (OS)	2	SN: 16029-@
3	6210-19-1320	• □ INSERT, 0.25MM, EXHAUST VALVE (OS)	2	SN: 11000-16028
3	6210-18-1321	• INSERT, 0.50MM, EXHAUST VALVE (OS)	2	SN: 16029-@
3	6210-18-1320	• □ INSERT, 0.50MM, EXHAUST VALVE (OS)	2	SN: 11000-16028
3	6210-17-1321	• INSERT, 0.75MM, EXHAUST VALVE (OS)	2	SN: 16029-@
3	6210-17-1320	• □ INSERT, 0.75MM, EXHAUST VALVE (OS)	2	SN: 11000-16028
3	6210-16-1321	• INSERT, 1.00MM, EXHAUST VALVE (OS)	2	SN: 16029-@
3	6210-16-1320	• □ INSERT, 1.00MM, EXHAUST VALVE (OS)	2	SN: 11000-16028
4	6210-16-1340	• GUIDE, VALVE	4	SN: 11000-17145
5	6210-11-1150	• PIPE	1	SN: 11000-@
6	07000-63025	• O RING	1	SN: 11000-@
7	6162-13-1150	• PLUG, EXPANSION	12	SN: 11000-@
8	07046-41810	• PLUG, EXPANSION	1	SN: 11000-@
9	07043-50108	• PLUG	1	SN: 11000-@
10	04020-00820	• PIN, DOWEL	2	SN: 11000-@
11	6210-11-1140	• GUIDE, CROSSHEAD	2	SN: 11000-@
12	01010-51016	• BOLT	1	SN: 17056-17145
13	07003-01015	• GASKET	1	SN: 17056-17145
14	02720-40104	PLUG	6	SN: 17056-17145
15	6215-41-4110	VALVE, INTAKE	12	SN: 13540-@
15	6210-41-4110	VALVE, INTAKE	12	SN: 11000-13539
16	6215-41-4212	VALVE, EXHAUST	12	SN: 16029-@
16	6215-41-4211	□ VALVE, EXHAUST	12	SN: 14158-16028
16	6215-41-4210	□ VALVE, EXHAUST	12	SN: 13540-14157
16	6210-41-4210	VALVE, EXHAUST	12	SN: 11000-13539
17	6210-41-4530	SEAT, LOWER	24	SN: 11000-@
18	6210-41-4510	SEAT, UPPER	24	SN: 11000-@
19	6136-41-4520	COTTER	48	SN: 11000-@
20	6210-41-4440	SPRING, INNER	24	SN: 14110-@
20	6210-41-4410	□ SPRING, INNER	24	SN: 11000-14109
21	6210-41-4430	SPRING, OUTER	24	SN: 14110-@
21	6210-41-4420	□ SPRING, OUTER	24	SN: 11000-14109
22	6210-41-5620	CROSSHEAD	12	SN: 11000-@

Open this exact parts catalogue on K-Part

Item	Part No.	Part Name	Qty	Options
23	6210-41-5640	SCREW	12	SN: 11000-@
24	6127-41-5630	NAT	12	SN: 11000-17145
25	6210-41-4541	SEAL, VALVE STEM	12	SN: 16859-17145
25	6210-41-4540	☐ SEAL, VALVE STEM	12	SN: 11000-16858
26	6210-17-1813	GASKET, HEAD	6	SN: 16859-@
26	6210-17-1812	◆ GASKET, HEAD	6	SN: 13540-16858
26	6210-17-1811	◆ GASKET, HEAD	6	SN: 11000-13539
27	6210-11-1820	• GROMMET, OIL	1	SN: 11000-@
28	6210-11-1830	• GROMMET, OIL	1	SN: 11000-@
29	6210-11-1840	• GROMMET, OIL	1	SN: 11000-@
30	6210-11-1962	• GROMMET, WATER	1	SN: 16859-@
30	6210-11-1961	• ◆ GROMMET, WATER	1	SN: 13540-16858
30	6210-11-1850	• ◆ GROMMET, WATER	1	SN: 11000-13539
31	6210-11-1952	• GROMMET, WATER	4	SN: 16859-@
31	6210-11-1951	• ◆ GROMMET, WATER	4	SN: 13540-16858
31	6210-11-1860	• ◆ GROMMET, WATER	4	SN: 11000-13539
32	6210-11-1610	BOLT, HEAD	36	SN: 11000-@
33	6150-81-9160	BOLT, HEAD	6	SN: 11000-@

Catalog signs: ■ may be used instead of described part ☆ not supplied separately: assembly only ☐ part above may be used instead ◆ interchangeable with part above

Reference: A1010-A4A3

Open this exact parts catalogue on K-Part

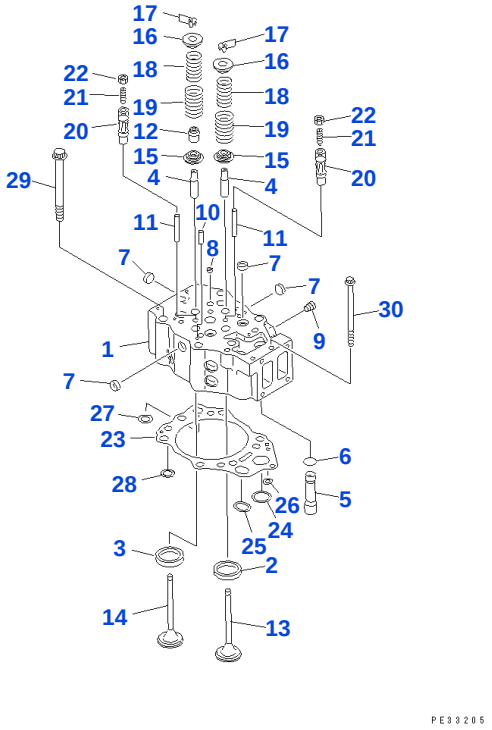

Reference: A1010-A4A3A

030020 CYLINDER HEAD (#17146-)

Item	Part No.	Part Name	Qty	Options
	6211-11-1103	CYLINDER HEAD ASSEMBLY, WITHOUT VALVE	6	SN: 17146-UP
1		• ☆ HEAD, CYLINDER	1	SN: 17146-UP
2	6210-11-1330	• INSERT, INTAKE VALVE (STD)	2	SN: 11000-UP
2	6210-19-1330	• INSERT, 0.25MM, INTAKE VALVE (OS)	2	SN: 11000-UP
2	6210-18-1330	• INSERT, 0.50MM, INTAKE VALVE (OS)	2	SN: 11000-UP
2	6210-17-1330	• INSERT, 0.75MM, INTAKE VALVE (OS)	2	SN: 11000-UP
2	6210-16-1330	• INSERT, 1.00MM, INTAKE VALVE (OS)	2	SN: 11000-UP
3	6210-11-1321	• INSERT, EXHAUST VALVE (STD)	2	SN: 16029-UP
3	6210-19-1321	• INSERT, 0.25MM, EXHAUST VALVE (OS)	2	SN: 16029-UP
3	6210-18-1321	• INSERT, 0.50MM, EXHAUST VALVE (OS)	2	SN: 16029-UP
3	6210-17-1321	• INSERT, 0.75MM, EXHAUST VALVE (OS)	2	SN: 16029-UP
3	6210-16-1321	• INSERT, 1.00MM, EXHAUST VALVE (OS)	2	SN: 16029-UP
4	6212-16-1440	• GUIDE, VALVE	4	SN: 17146-UP

Open this exact parts catalogue on K-Part

Item	Part No.	Part Name	Qty	Options
5	6210-11-1150	• PIPE	1	SN: 11000-UP
6	07000-63025	• O RING	1	SN: 11000-UP
7	6162-13-1150	• PLUG, EXPANSION	12	SN: 11000-UP
8	07046-41810	• PLUG, EXPANSION	1	SN: 11000-UP
9	07043-50108	• PLUG	1	SN: 11000-UP
10	04020-00820	• PIN, DOWEL	2	SN: 11000-UP
11	6210-11-1140	• GUIDE, CROSSHEAD	2	SN: 11000-UP
12	6212-41-4540	SEAL, VALVE	12	SN: 17146-UP
13	6215-41-4110	VALVE, INTAKE	12	SN: 13540-UP
14	6215-41-4212	VALVE, EXHAUST	12	SN: 16029-UP
15	6210-41-4530	SEAT, LOWER	24	SN: 11000-UP
16	6210-41-4510	SEAT, UPPER	24	SN: 11000-UP
17	6136-41-4520	COTTER	48	SN: 11000-UP
18	6210-41-4440	SPRING, INNER	24	SN: 14110-UP
19	6210-41-4430	SPRING, OUTER	24	SN: 14110-UP
20	6210-41-5620	CROSSHEAD	12	SN: 11000-UP
21	6210-41-5640	SCREW	12	SN: 11000-UP
22	6162-43-5630	NAT	12	SN: 17146-UP
23	6210-17-1813	GASKET, HEAD	6	SN: 16859-UP
24	6210-11-1820	• GROMMET, OIL	1	SN: 11000-UP
25	6210-11-1830	• GROMMET, OIL	1	SN: 11000-UP
26	6210-11-1840	• GROMMET, OIL	1	SN: 11000-UP
27	6210-11-1962	• GROMMET, WATER	1	SN: 16859-UP
28	6210-11-1952	• GROMMET, WATER	4	SN: 16859-UP
29	6210-11-1610	BOLT, HEAD	36	SN: 11000-UP
30	01438-01020	BOLT	6	SN: 17146-UP

Catalog signs: ☆ not supplied separately: assembly only

Reference: A1010-A4A3A

Open this exact parts catalogue on K-Part

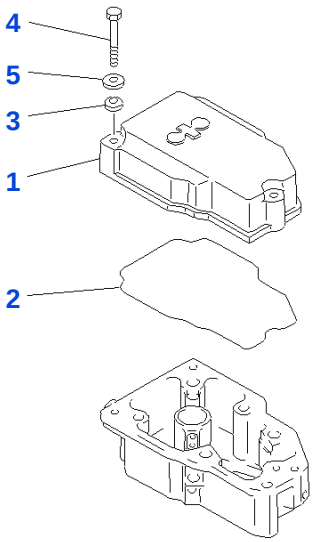

PE38034

Reference: A1110-A4A1

030030 HEAD COVER (#11000-17145)

Item	Part No.	Part Name	Qty	Options
1	6210-11-8110	COVER, ROCKER ARM HOUSING	6	SN: 11000-17145
2	6210-11-8811	GASKET	6	SN: 15473-17145
2	6210-11-8810	◆ GASKET	6	SN: 11000-15472
3	6210-11-8141	RUBBER	18	SN: 16684-17145
3	6210-11-8140	◆ RUBBER	18	SN: 11000-16683
4	01010-50865	BOLT	18	SN: 11000-17145
5	6210-11-8120	WASHER	18	SN: 11000-17145

Catalog signs: ◆ interchangeable with part above

Reference: A1110-A4A1

Open this exact parts catalogue on K-Part

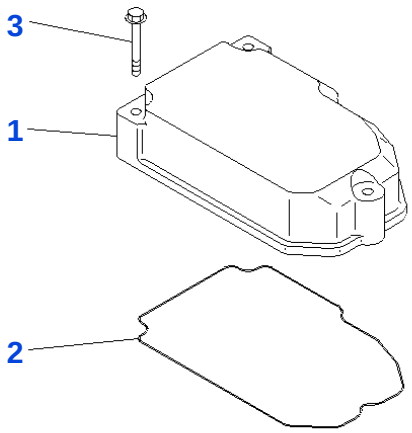

PD30137

Reference: A1110-A4A1A

030040 HEAD COVER (#17146-)

Item	Part No.	Part Name	Qty	Options
1	6210-11-8111	COVER, ROCKER ARM HOUSING	6	SN: 17146-UP
2	6210-11-8820	GASKET	6	SN: 17146-UP
3	01435-00855	BOLT	18	SN: 17146-UP

Reference: A1110-A4A1A

Open this exact parts catalogue on K-Part

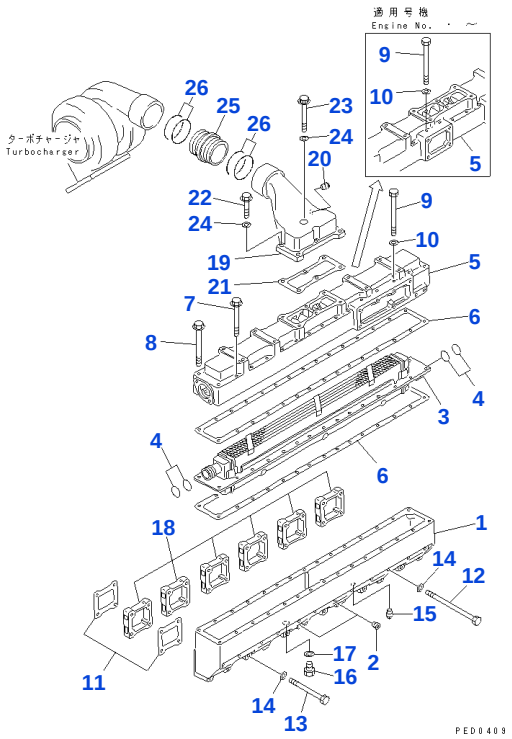

Reference: A1310-A4B1

030050 AIR INTAKE MANIFOLD AND AFTER COOLER

Item	Part No.	Part Name	Qty	Options
1	6212-11-4110	MANIFOLD, AIR INTAKE	1	SN: 11000-UP
2	07043-50108	PLUG	2	SN: 11000-UP
3	6212-61-6121	CORE, AFTER COOLER	1	SN: 16029-UP
3	6212-61-6120	◆ CORE, AFTER COOLER	1	SN: 11000-16028
4	6212-61-6431	O RING	4	SN: 16029-UP
4	6212-61-6430	□ O RING	4	SN: 11000-16028
5	6212-11-4210	COVER	1	SN: 11000-UP
6	6215-15-4710	GASKET	2	SN: 17618-UP
6	6212-11-4710	□ GASKET	2	SN: 11000-17617
7	01435-00895	BOLT	20	SN: .-UP
7	01435-00890	BOLT	22	SN: 11000-.
8	01436-01000	BOLT	4	SN: 11000-UP
9	6132-11-4690	BOLT	6	SN: .-UP
9	6132-11-4690	BOLT	4	SN: 11000-.
10	01640-20816	WASHER	6	SN: .-UP
10	01640-20816	WASHER	4	SN: 11000-.
11	6210-11-4811	GASKET	12	SN: 17618-UP
11	6210-11-4810	□ GASKET	12	SN: 11000-17617
12	01011-51055	BOLT	12	SN: 11000-UP
13	01011-51000	BOLT	12	SN: 11000-UP
14	01640-21016	WASHER	24	SN: 11000-UP
15	07042-00108	PLUG	1	SN: 11000-UP
16	07040-12414	PLUG	1	SN: 11000-UP
17	07005-02416	SEAL, WASHER	1	SN: 11000-UP
18	6212-11-4810	SPACER	6	SN: 11000-UP
19	6212-11-4320	CONNECTOR,AIR	1	SN: 11000-UP
20	07042-00108	PLUG	1	SN: 11000-UP
21	6212-11-4721	GASKET	1	SN: 17618-UP
21	6212-11-4720	□ GASKET	1	SN: 11000-17617
22	6150-81-9130	BOLT	5	SN: 11000-UP
23	01437-11075	BOLT	1	SN: 17618-UP
23	6150-81-9140	◆ BOLT	1	SN: 11000-17617
24	01641-21016	WASHER	6	SN: 11000-UP
25	6211-11-4410	CONNECTOR	1	SN: 11000-UP

Open this exact parts catalogue on K-Part

Item	Part No.	Part Name	Qty	Options
26	02895-67075	O RING	4	SN: 11000-UP

Catalog signs: ◆ interchangeable with part above ☐ part above may be used instead

Reference: A1310-A4B1

Open this exact parts catalogue on K-Part

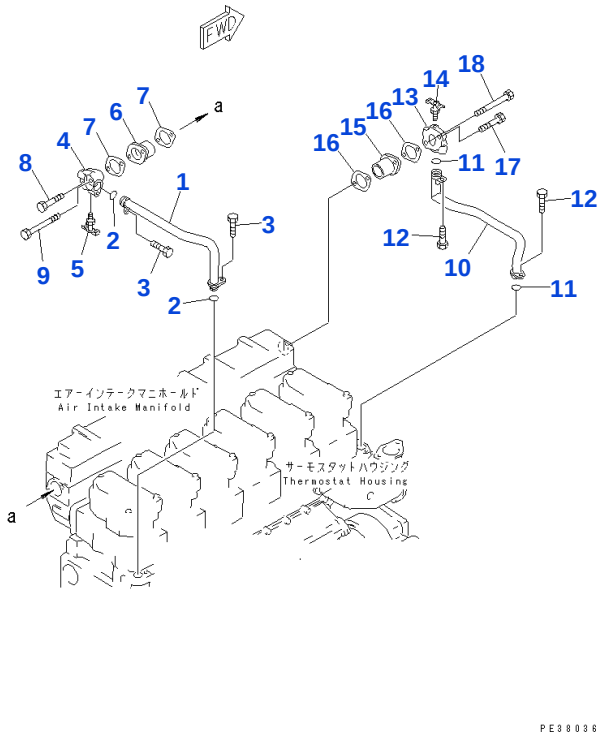

Reference: A1310-B4B1

030060 AFTER COOLER WATER PIPING

Item	Part No.	Part Name	Qty	Options
1	6212-61-6410	TUBE	1	SN: 11000-UP
2	6215-61-6630	O RING	2	SN: 17618-UP
2	07000-03025	◆ O RING	2	SN: 11000-17617
3	01010-51016	BOLT	2	SN: 11000-UP
4	6212-61-6640	CONNECTOR	1	SN: 11000-UP
5	07062-00000	VALVE	1	SN: 11000-UP
6	6212-61-6650	CONNECTOR	1	SN: 11000-UP
7	6212-61-6661	GASKET	2	SN: 17618-UP
7	6212-61-6660	◆ GASKET	2	SN: 11000-17617
8	01010-51040	BOLT	1	SN: 11000-UP
9	01010-51065	BOLT	1	SN: 11000-UP
10	6212-61-6510	TUBE	1	SN: 11000-UP
11	6215-61-6630	O RING	2	SN: 17618-UP
11	07000-03025	◆ O RING	2	SN: 11000-17617
12	01010-51016	BOLT	2	SN: 11000-UP
13	6212-61-6620	CONNECTOR	1	SN: 11000-UP
14	07062-00000	VALVE	1	SN: 11000-UP
15	6212-61-6650	CONNECTOR	1	SN: 11000-UP
16	6212-61-6661	GASKET	2	SN: 17618-UP
16	6212-61-6660	◆ GASKET	2	SN: 11000-17617
17	01010-51040	BOLT	1	SN: 11000-UP
18	01010-51065	BOLT	1	SN: 11000-UP

Catalog signs: ◆ interchangeable with part above

Reference: A1310-B4B1

Open this exact parts catalogue on K-Part

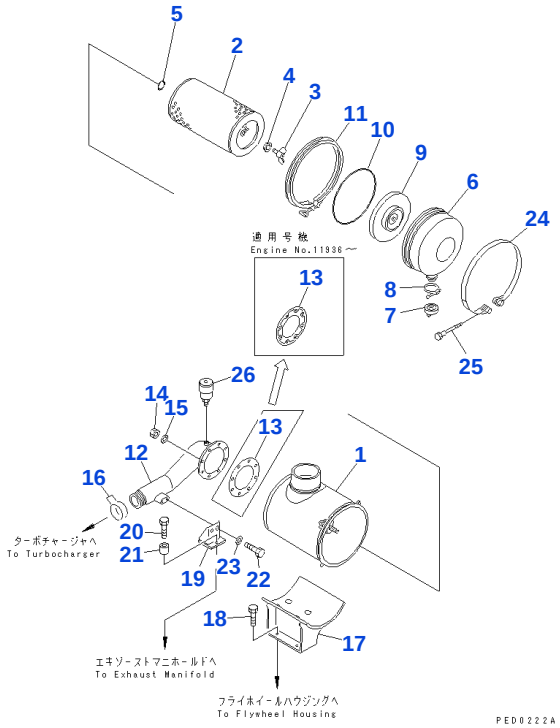

Reference: A1410-A4C2

030070 AIR CLEANER (SINGLE ELEMENT TYPE)

Item	Part No.	Part Name	Qty	Options
	6128-81-7700	AIR CLEANER ASSEMBLY	1	SN: 11000-UP
1	6128-81-7410	• BODY, AIR CLEANER	1	SN: 11000-UP
	600-181-4200	• • ELEMENT ASSEMBLY	1	SN: 11000-UP
2		• • • ☆ ELEMENT	1	SN: 11000-UP
3	600-181-1990	• • • NUT, WING	1	SN: 11000-UP
4	600-181-4591	• • • WASHER, SEAL	1	SN: 11000-UP
5	04064-01510	• • • RING, SNAP	1	SN: 11000-UP
6	6127-82-7520	• COVER	1	SN: 11000-UP
7	6112-81-7810	• VALVE	1	SN: 11000-UP
8	6112-81-7820	• CLAMP	1	SN: 11000-UP
9	6127-82-7530	• BAFFLE	1	SN: 11000-UP
10	6127-82-7550	• O RING	1	SN: 11000-UP
11	6127-82-7540	• CLAMP	1	SN: 11000-UP
12	6212-11-4510	CONNECTOR,AIR	1	SN: 11000-UP
13	6127-81-4824	GASKET	1	SN: 19902-UP
13	6127-81-4822	☐ GASKET	1	SN: 11936-19901
13	6127-81-4821	☐ GASKET	1	SN: 11000-11935
14	01580-11008	NAT	8	SN: 11000-UP
15	01640-21016	WASHER	8	SN: 11000-UP
16	02895-67081	O RING	2	SN: 11000-UP
17	6212-11-4520	BRACKET	1	SN: 11000-UP
18	01010-31225	BOLT	4	SN: 11000-UP
19	6211-11-4710	BRACKET	1	SN: 11000-UP
20	01010-31040	BOLT	2	SN: 11000-UP
21	6631-11-5630	SPACER	2	SN: 11000-UP
22	01010-31030	BOLT	2	SN: 11000-UP
23	01642-01016	WASHER	2	SN: 11000-UP
24	6128-11-4380	BAND ASSEMBLY	1	SN: 11000-UP
24	6691-21-6550	• PIN	1	SN: 11000-UP
24	6691-21-6560	• PIN, WITH THREAD	1	SN: 11000-UP
25	6643-11-4641	BOLT	1	SN: 11000-UP
26	08670-02001	INJECTOR, DUST	1	SN: 11000-UP

Catalog signs: ☆ not supplied separately: assembly only ☐ part above may be used instead

Open this exact parts catalogue on K-Part

Get the complete PDF catalogue

Komatsu SA6D140A-1G2 (JPN) G-SA6D140A-1G2-D4 FOR GENERATOR TOKYO ELECTRIC RADIATOR S/N 11000-UP (JAPANESE)

$89

with PayPal | Store cart: $99

Buy this PDF on Manuals Komatsu

Check the model, serial range and language before payment.

Download instructions are emailed after payment confirmation.

This free sample contains 10 catalogue pages.