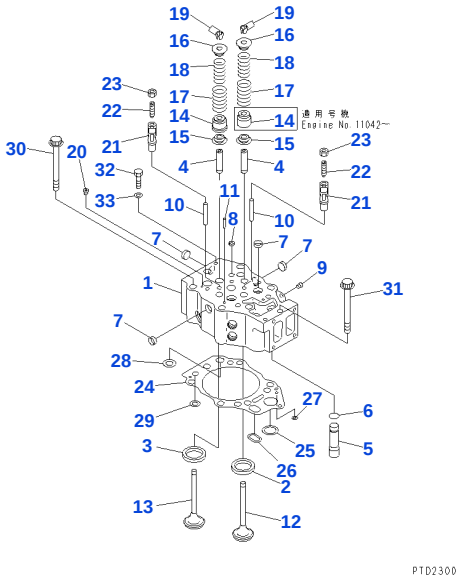

Reference: A1010-A7A1

030010 CYLINDER HEAD(#10001-11194)

Item	Part No.	Part Name	Qty	Options
	6212-11-1101	CYLINDER HEAD ASSEMBLY, WITHOUT VALVE	12	SN: 10375-11194
	6212-11-1100	■ CYLINDER HEAD ASSEMBLY, WITHOUT VALVE (6212-11-1101,01010-51016, 07003-01015)	12	SN: 10001-10374
1		• ☆ HEAD, CYLINDER	1	SN: 10375-11194
1		• ☆ HEAD, CYLINDER	1	SN: 10001-10374
2	6212-11-1330	• INSERT, INTAKE VALVE (STD)	2	SN: 10001-@
2	6212-19-1330	• INSERT, 0.25MM, INTAKE VALVE (OS)	2	SN: 10001-@
2	6212-18-1330	• INSERT, 0.50MM, INTAKE VALVE (OS)	2	SN: 10001-@
2	6212-17-1330	• INSERT, 0.75MM, INTAKE VALVE (OS)	2	SN: 10001-@
2	6212-16-1330	• INSERT, 1.00MM, INTAKE VALVE (OS)	2	SN: 10001-@
3	6210-11-1321	• INSERT, EXHAUST VALVE (STD)	2	SN: 10375-@
3	6210-11-1320	• □ INSERT, EXHAUST VALVE (STD)	2	SN: 10001-10374
3	6210-19-1321	• INSERT, 0.25MM, EXHAUST VALVE (OS)	2	SN: 10375-@
3	6210-19-1320	• □ INSERT, 0.25MM, EXHAUST VALVE (OS)	2	SN: 10001-10374
3	6210-18-1321	• INSERT, 0.50MM, EXHAUST VALVE (OS)	2	SN: 10375-@
3	6210-18-1320	• □ INSERT, 0.50MM, EXHAUST VALVE (OS)	2	SN: 10001-10374
3	6210-17-1321	• INSERT, 0.75MM, EXHAUST VALVE (OS)	2	SN: 10375-@
3	6210-17-1320	• □ INSERT, 0.75MM, EXHAUST VALVE (OS)	2	SN: 10001-10374
3	6210-16-1321	• INSERT, 1.00MM, EXHAUST VALVE (OS)	2	SN: 10375-@
3	6210-16-1320	• □ INSERT, 1.00MM, EXHAUST VALVE (OS)	2	SN: 10001-10374
4	6212-16-1440	• GUIDE, VALVE	4	SN: 11042-@
4	6210-16-1340	• ■ GUIDE, VALVE (6212-16-1440(4),6212-41-4540(4))	4	SN: 10001-11041
5	6210-11-1150	• PIPE	1	SN: 10001-@
6	07000-63025	• O RING	1	SN: 10001-@
7	6162-13-1150	• PLUG, EXPANSION	12	SN: 10001-@
8	07046-41810	• PLUG, EXPANSION	1	SN: 10001-@
9	07043-50108	• PLUG	1	SN: 10001-@
10	6210-11-1140	• GUIDE, CROSSHEAD	2	SN: 10001-@
11	04020-00820	• PIN, DOWEL	2	SN: 10001-@
12	6215-41-4110	VALVE, INTAKE	24	SN: 10001-@
13	6215-41-4212	VALVE, EXHAUST	24	SN: 10395-@
13	6215-42-4210	◆ VALVE, EXHAUST	24	SN: 10365-10394
13	6215-41-4211	□ VALVE, EXHAUST	24	SN: 10263-10364
13	6215-41-4210	□ VALVE, EXHAUST	24	SN: 10001-10262
14	6212-41-4540	SEAL, VALVE STEM	48	SN: 11042-UP
14	6210-41-4541	■ SEAL, VALVE STEM (6212-41-4540(48),6212-16-1440(48))	24	SN: 10001-11041
15	6210-41-4530	SEAT,LOWER	48	SN: 10001-@
16	6210-41-4510	SEAT, UPPER	48	SN: 10001-@
17	6210-41-4430	SPRING, OUTER	48	SN: 10001-@
18	6210-41-4440	SPRING, INNER	48	SN: 10001-@
19	6136-41-4520	COTTER	96	SN: 10001-@
20	02720-40104	PLUG	12	SN: 10375-@
21	6210-41-5620	CROSSHEAD	24	SN: 10001-@

Open this exact parts catalogue on K-Part

Item	Part No.	Part Name	Qty	Options
22	6210-41-5640	SCREW	24	SN: 10001-@
23	6127-41-5630	NAT	24	SN: 10001-11194
		STANDARD		
24	6210-17-1813	GASKET, HEAD	12	SN: 10347-@
24	6210-17-1812	◆ GASKET, HEAD	12	SN: 10047-10346
24	6210-17-1811	□ GASKET, HEAD	12	SN: 10001-10046
25	6210-11-1820	• GROMMET, OIL	1	SN: 10001-@
26	6210-11-1830	• GROMMET, OIL	1	SN: 10001-@
27	6210-11-1840	• GROMMET, OIL	1	SN: 10001-@
28	6210-11-1962	• GROMMET, WATER	1	SN: 10347-@
28	6210-11-1961	• ◆ GROMMET, WATER	1	SN: 10199-10346
28	6210-11-1960	• ◆ GROMMET, WATER	1	SN: 10047-10198
28	6210-11-1850	• ◆ GROMMET, WATER	1	SN: 10001-10046
29	6210-11-1952	• GROMMET, WATER	4	SN: 10347-@
29	6210-11-1951	• ◆ GROMMET, WATER	4	SN: 10199-10346
29	6210-11-1950	• ◆ GROMMET, WATER	4	SN: 10047-10198
29	6210-11-1860	• ◆ GROMMET, WATER	4	SN: 10001-10046
		OVERSIZE 0.40MM		
24	6210-19-1813	GASKET, HEAD	12	SN: 10347-@
24	6210-19-1812	◆ GASKET, HEAD	12	SN: 10047-10346
24	6210-19-1811	□ GASKET, HEAD	12	SN: 10001-10046
25	6210-19-1820	• GROMMET, OIL	1	SN: 10001-@
26	6210-19-1830	• GROMMET, OIL	1	SN: 10001-@
27	6210-19-1840	• GROMMET, OIL	1	SN: 10001-@
28	6210-19-1962	• GROMMET, WATER	1	SN: 10347-@
28	6210-19-1961	• ◆ GROMMET, WATER	1	SN: 10199-10346
28	6210-19-1960	• ◆ GROMMET, WATER	1	SN: 10047-10198
28	6210-19-1850	• ◆ GROMMET, WATER	1	SN: 10001-10046
29	6210-19-1952	• GROMMET, WATER	4	SN: 10347-@
29	6210-19-1951	• ◆ GROMMET, WATER	4	SN: 10199-10346
29	6210-19-1950	• ◆ GROMMET, WATER	4	SN: 10047-10198
29	6210-19-1860	• ◆ GROMMET, WATER	4	SN: 10001-10046
30	6210-11-1610	BOLT, HEAD	72	SN: 10001-@
31	01438-01020	BOLT, HEAD	12	SN: 10001-@
32	01010-81016	BOLT	12	SN: 10375-@
33	07003-01015	GASKET	12	SN: 10375-@

Catalog signs: ■ may be used instead of described part ☆ not supplied separately: assembly only □ part above may be used instead ◆ interchangeable with part above

Reference: A1010-A7A1

Open this exact parts catalogue on K-Part

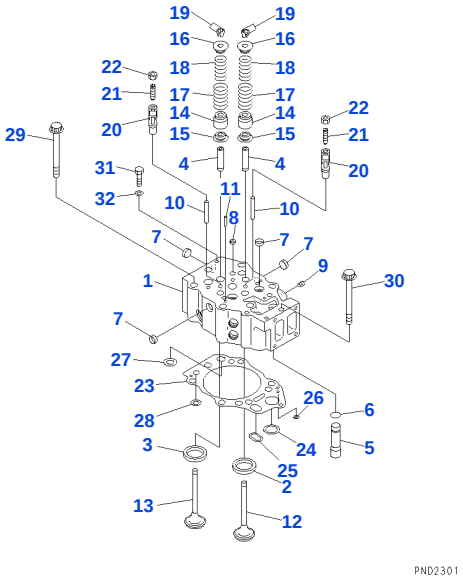

Reference: A1010-A7A1A

030020 CYLINDER HEAD(#11195-)

Item	Part No.	Part Name	Qty	Options
	6215-11-1100	CYLINDER HEAD ASSEMBLY	12	SN: 12982-UP
	6212-11-1103	□ CYLINDER HEAD ASSEMBLY	12	SN: 11195-12981
1		• ☆ HEAD, CYLINDER	1	SN: 12982-UP
1		• ☆ HEAD, CYLINDER	1	SN: 11195-12981
2	6216-11-1330	• INSERT, INTAKE VALVE (STD)	2	SN: 11417-UP
2	6212-11-1330	• □ INSERT, INTAKE VALVE (STD)	2	SN: 10001-11416
2	6216-19-1330	• INSERT, 0.25MM, INTAKE VALVE (OS)	2	SN: 11417-UP
2	6212-19-1330	• □ INSERT, 0.25MM, INTAKE VALVE (OS)	2	SN: 10001-11416
2	6216-18-1330	• INSERT, 0.50MM, INTAKE VALVE (OS)	2	SN: 11417-UP
2	6212-18-1330	• □ INSERT, 0.50MM, INTAKE VALVE (OS)	2	SN: 10001-11416
2	6216-17-1330	• INSERT, 0.75MM, INTAKE VALVE (OS)	2	SN: 11417-UP
2	6212-17-1330	• □ INSERT, 0.75MM, INTAKE VALVE (OS)	2	SN: 10001-11416
2	6216-16-1330	• INSERT, 1.00MM, INTAKE VALVE (OS)	2	SN: 11417-UP
2	6212-16-1330	• □ INSERT, 1.00MM, INTAKE VALVE (OS)	2	SN: 10001-11416
3	6210-11-1321	• INSERT, EXHAUST VALVE (STD)	2	SN: 10375-UP
3	6210-19-1321	• INSERT, 0.25MM, EXHAUST VALVE (OS)	2	SN: 10375-UP
3	6210-18-1321	• INSERT, 0.50MM, EXHAUST VALVE (OS)	2	SN: 10375-UP
3	6210-17-1321	• INSERT, 0.75MM, EXHAUST VALVE (OS)	2	SN: 10375-UP
3	6210-16-1321	• INSERT, 1.00MM, EXHAUST VALVE (OS)	2	SN: 10375-UP
4	6212-16-1440	• GUIDE, VALVE	4	SN: 11042-UP
5	6210-11-1150	• PIPE	1	SN: 10001-UP
6	07000-73025	• O RING	1	SN: 12455-UP
6	07000-63025	• ◆ O RING	1	SN: 10001-12454
7	6162-13-1150	• PLUG, EXPANSION	12	SN: 10001-UP
8	07046-41810	• PLUG, EXPANSION	1	SN: 10001-UP
9	6215-81-9510	• PLUG	1	SN: 12982-UP
9	07043-50108	• PLUG	1	SN: 10001-12981
9A	6215-81-9710	• O RING	1	SN: 12982-UP
10	6210-11-1140	• GUIDE, CROSSHEAD	2	SN: 10001-UP
11	04020-00820	• PIN, DOWEL	2	SN: 10001-UP
12	6215-41-4110	VALVE, INTAKE	24	SN: 10001-UP
13	6215-41-4212	VALVE, EXHAUST	24	SN: 10395-UP
14	6212-41-4540	SEAL, VALVE STEM	48	SN: 11042-UP
15	6210-41-4530	SEAT, SPRING, LOWER	48	SN: 10001-UP
16	6210-41-4510	SEAT, SPRING, UPPER	48	SN: 10001-UP
17	6210-41-4430	SPRING, OUTER	48	SN: 10001-UP
18	6210-41-4440	SPRING, INNER	48	SN: 10001-UP
19	6136-41-4520	COTTER, VALVE	96	SN: 10001-UP
20	6210-41-5620	CROSSHEAD	24	SN: 10001-UP
21	6210-41-5641	SCREW	24	SN: 12734-UP
21	6210-41-5640	□ SCREW	24	SN: 10001-12733
22	6162-43-5630	NAT STANDARD	24	SN: 11195-UP
23	6210-17-1813	GASKET, HEAD	12	SN: 10347-UP
24	6210-11-1820	• GROMMET, OIL	1	SN: 10001-UP
25	6210-11-1830	• GROMMET, OIL	1	SN: 10001-UP

Open this exact parts catalogue on K-Part

Item	Part No.	Part Name	Qty	Options
26	6210-11-1840	• GROMMET, OIL	1	SN: 10001-UP
27	6210-11-1962	• GROMMET, WATER	1	SN: 10347-UP
28	6210-11-1952	• GROMMET, WATER OVERSIZE 0.40MM	4	SN: 10347-UP
23	6210-19-1813	GASKET, HEAD	12	SN: 10347-UP
24	6210-19-1820	• GROMMET, OIL	1	SN: 10001-UP
25	6210-19-1830	• GROMMET, OIL	1	SN: 10001-UP
26	6210-19-1840	• GROMMET, OIL	1	SN: 10001-UP
27	6210-19-1962	• GROMMET, WATER	1	SN: 10347-UP
28	6210-19-1952	• GROMMET, WATER	4	SN: 10347-UP
29	6210-11-1610	BOLT, HEAD	72	SN: 10001-UP
30	01438-01020	BOLT, HEAD	12	SN: 10001-UP
31	01010-81016	BOLT, (TRANSPORT PART)	12	SN: 10375-UP
32	07003-01015	GASKET, (TRANSPORTATION PART)	12	SN: 10375-UP

Catalog signs: ☐ part above may be used instead ☆ not supplied separately: assembly only ◆ interchangeable with part above

Reference: A1010-A7A1A

Open this exact parts catalogue on K-Part

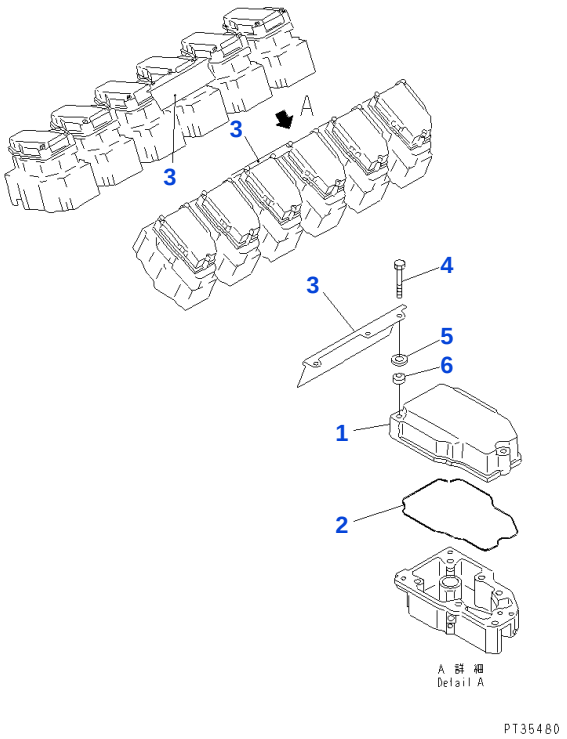

Reference: A1110-A7A3

030030 HEAD COVER (#10001-10908)

Item	Part No.	Part Name	Qty	Options
1	6210-11-8110	COVER, ROCKER ARM HOUSING	12	SN: 10001-10908
2	6210-11-8811	GASKET	12	SN: 10167-10908
2	6210-11-8810	◆ GASKET	12	SN: 10001-10166
3	6215-11-9110	PLATE, HEAT SHIELD	2	SN: 10001-10908
4	01010-80865	BOLT	36	SN: 10001-10908
5	6210-11-8120	WASHER	36	SN: 10001-10908
6	6210-11-8141	RUBBER	36	SN: 10330-10908
6	6210-11-8140	□ RUBBER	36	SN: 10001-10329

Catalog signs: ◆ interchangeable with part above □ part above may be used instead

Reference: A1110-A7A3

Open this exact parts catalogue on K-Part

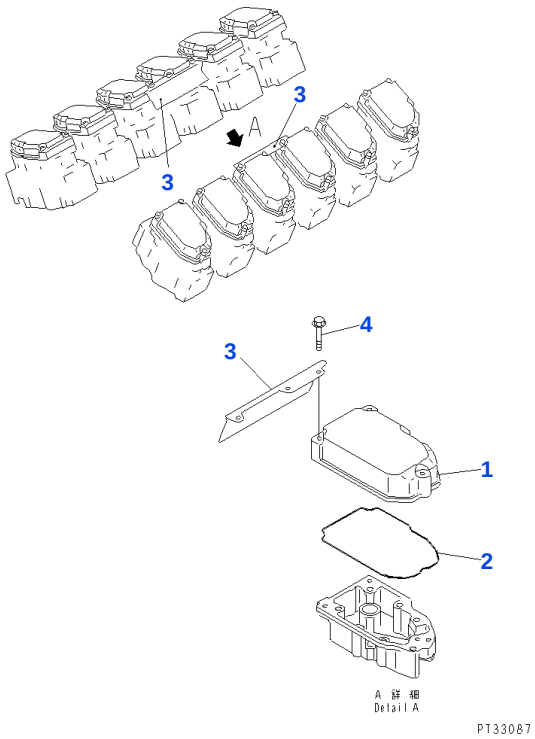

Reference: A1110-A7A3A

030040 HEAD COVER (#10909-)

Item	Part No.	Part Name	Qty	Options
1	6210-11-8111	COVER, ROCKER ARM HOUSING	12	SN: 10909-UP
2	6210-11-8820	GASKET	12	SN: 10909-UP
3	6215-11-9110	PLATE, HEAT SHIELD	2	SN: 10909-UP
4	01435-00855	BOLT	36	SN: 10909-UP

Reference: A1110-A7A3A

Open this exact parts catalogue on K-Part

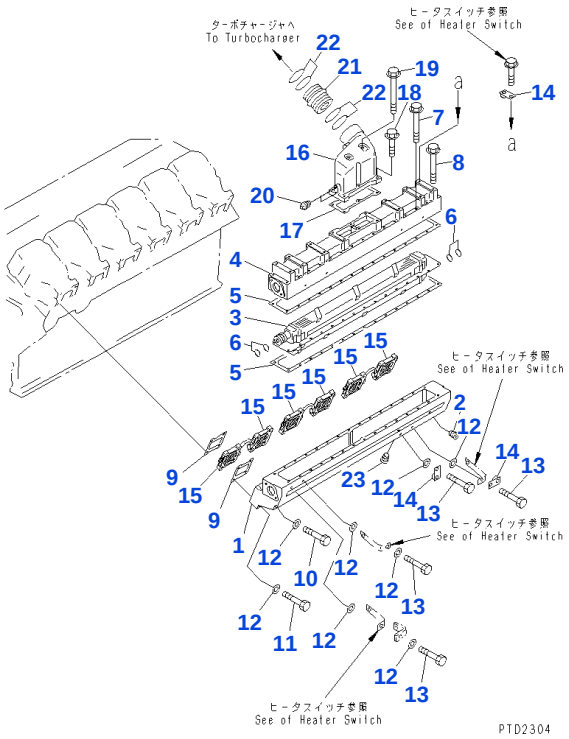

Reference: A1310-A7A2

030050 AIR INTAKE MANIFOLD AND AFTER COOLER (LEFT)(#10001-10712)

Item	Part No.	Part Name	Qty	Options
1	6215-11-4110	MANIFOLD, AIR INTAKE, LEFT	1	SN: 10001-@
2	07043-50108	PLUG	2	SN: 10001-@
3	6212-61-6121	CORE	1	SN: 10001-@
4	6215-11-4210	COVER	1	SN: 10001-@
5	6215-15-4710	GASKET	2	SN: 10449-@
5	6212-11-4710	☐ GASKET	2	SN: 10001-10448
6	6212-61-6430	O RING	4	SN: 10001-@
7	01435-00890	BOLT	26	SN: 10001-@
8	01436-01000	BOLT	4	SN: 10001-@
9	6210-11-4811	GASKET	12	SN: 10449-@
9	6210-11-4810	☐ GASKET	12	SN: 10001-10448
10	01011-81060	BOLT	12	SN: 10001-@
11	01011-81000	BOLT	7	SN: 10001-@
12	01643-31032	WASHER	26	SN: 10001-@
13	01011-81005	BOLT	5	SN: 10001-10712
14	426-01-11310	BRACKET	4	SN: 10001-@
15	600-815-4290	HEATER, RIBBON	6	SN: 10001-10712
16	6215-11-4320	CONNECTOR, AIR	1	SN: 10001-@
17	6212-11-4721	GASKET	1	SN: 10449-@
17	6212-11-4720	☐ GASKET	1	SN: 10001-10448
18	01435-01035	BOLT	4	SN: 10001-@
19	01436-01080	BOLT	2	SN: 10001-@
20	07042-70108	PLUG	2	SN: 10001-@
21	6211-11-4410	CONNECTOR	1	SN: 10001-@
22	02895-77075	O RING	4	SN: 10449-@
22	6161-11-4720	O RING	4	SN: 10001-10448
23	07043-70108	PLUG	1	SN: 10001-@

Catalog signs: ☐ part above may be used instead

Reference: A1310-A7A2

Open this exact parts catalogue on K-Part

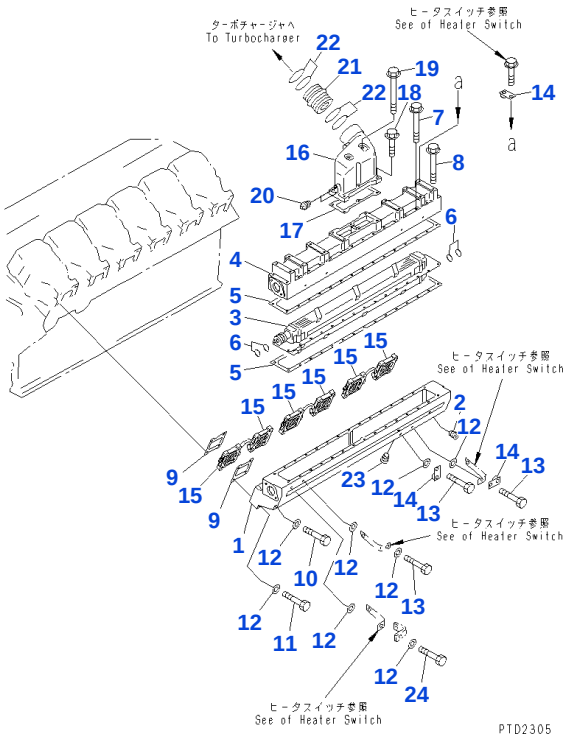

Reference: A1310-A7A2A

030060 AIR INTAKE MANIFOLD AND AFTER COOLER (LEFT)(#10713-)

Item	Part No.	Part Name	Qty	Options
1	6215-11-4110	MANIFOLD, AIR INTAKE, LEFT	1	SN: 10001-UP
2	07043-50108	PLUG	2	SN: 10001-UP
3	6212-61-6121	CORE	1	SN: 10001-UP
4	6215-11-4210	COVER	1	SN: 10001-UP
5	6215-15-4710	GASKET	2	SN: 10449-UP
6	6212-61-6430	O RING	4	SN: 10001-UP
7	01435-00890	BOLT	26	SN: 10001-UP
8	01436-01000	BOLT	4	SN: 10001-UP
9	6210-11-4811	GASKET	12	SN: 10449-UP
10	01011-81060	BOLT	12	SN: 10001-UP
11	01011-81000	BOLT	7	SN: 10001-UP
12	01643-31032	WASHER	26	SN: 10001-UP
13	01011-81005	BOLT	4	SN: 10713-UP
14	426-01-11310	BRACKET	4	SN: 10001-UP
15	600-815-4291	HEATER, RIBBON	6	SN: 10713-UP
16	6215-11-4320	CONNECTOR, AIR	1	SN: 10001-UP
17	6212-11-4721	GASKET	1	SN: 10449-UP
18	01435-01035	BOLT	4	SN: 10001-UP
19	01436-01080	BOLT	2	SN: 10001-UP
20	07042-70108	PLUG	2	SN: 10001-UP
21	6211-11-4410	CONNECTOR	1	SN: 10001-UP
22	02895-77075	O RING	4	SN: 10449-UP
23	07043-70108	PLUG	1	SN: 10001-UP
24	01011-81015	BOLT	1	SN: 10713-UP

Reference: A1310-A7A2A

Open this exact parts catalogue on K-Part

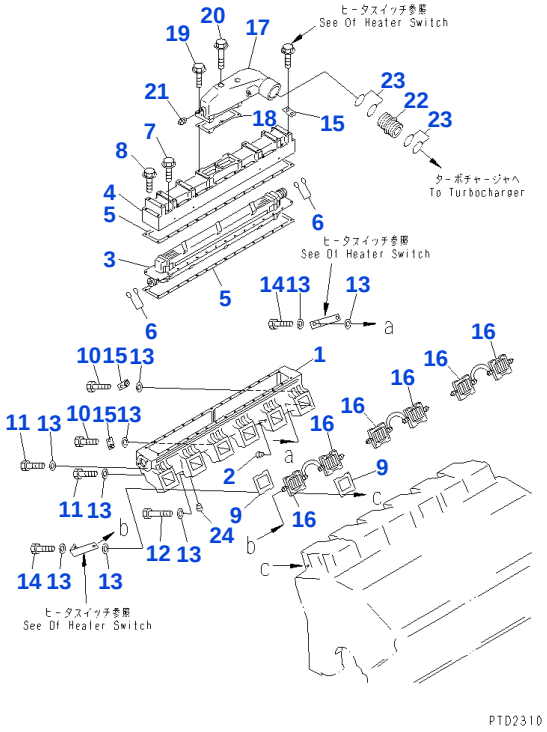

Reference: A1310-B7A2

030070 AIR INTAKE MANIFOLD AND AFTER COOLER (RIGHT)(#10001-10712)

Item	Part No.	Part Name	Qty	Options
1	6215-11-4110	MANIFOLD, AIR INTAKE, RIGHT	1	SN: 10001-@
2	07043-50108	PLUG	2	SN: 10001-@
3	6212-61-6121	CORE	1	SN: 10001-@
4	6215-11-4210	COVER	1	SN: 10001-@
5	6215-15-4710	GASKET	2	SN: 10449-@
5	6212-11-4710	☐ GASKET	2	SN: 10001-10448
6	6212-61-6430	O RING	4	SN: 10001-@
7	01435-00890	BOLT	26	SN: 10001-@
8	01436-01000	BOLT	4	SN: 10001-@
9	6210-11-4811	GASKET	12	SN: 10449-@
9	6210-11-4810	☐ GASKET	12	SN: 10001-10448
10	01011-81065	BOLT	3	SN: 10001-@
11	01011-81060	BOLT	9	SN: 10001-@
12	01011-81000	BOLT	9	SN: 10001-@
13	01643-31032	WASHER	27	SN: 10001-@
14	01011-81005	BOLT	3	SN: 10001-@
15	426-01-11310	BRACKET	4	SN: 10001-@
16	600-815-4290	HEATER, RIBBON	6	SN: 10001-10712
17	6215-11-4330	CONNECTOR, AIR	1	SN: 10001-@
18	6212-11-4721	GASKET	1	SN: 10449-@
18	6212-11-4720	☐ GASKET	1	SN: 10001-10448
19	01435-01035	BOLT	4	SN: 10001-@
20	01436-01080	BOLT	2	SN: 10001-@
21	07042-70108	PLUG	2	SN: 10001-@
22	6211-11-4410	CONNECTOR	1	SN: 10001-@
23	02895-77075	O RING	4	SN: 10449-@
23	6161-11-4720	O RING	4	SN: 10001-10448
24	07043-70108	PLUG	1	SN: 10001-@

Catalog signs: ☐ part above may be used instead

Reference: A1310-B7A2

Open this exact parts catalogue on K-Part

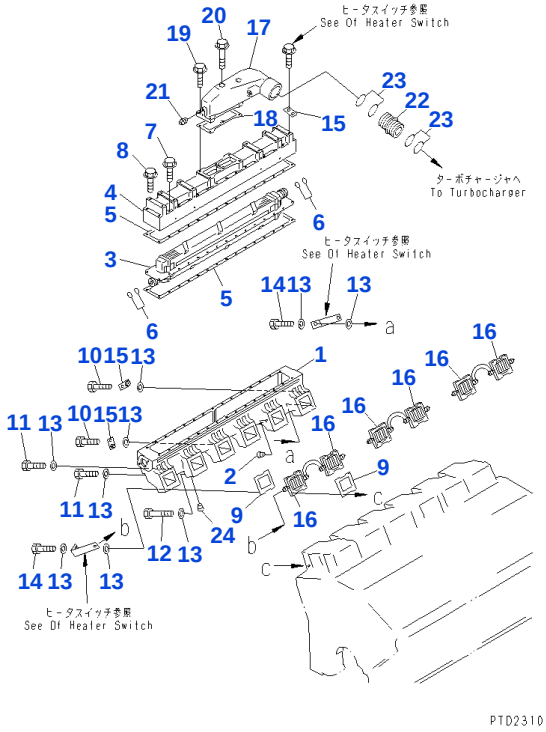

Reference: A1310-B7A2A

030080 AIR INTAKE MANIFOLD AND AFTER COOLER (RIGHT)(#10713-)

Item	Part No.	Part Name	Qty	Options
1	6215-11-4110	MANIFOLD, AIR INTAKE, RIGHT	1	SN: 10001-UP
2	07043-50108	PLUG	2	SN: 10001-UP
3	6212-61-6121	CORE	1	SN: 10001-UP
4	6215-11-4210	COVER	1	SN: 10001-UP
5	6215-15-4710	GASKET	2	SN: 10449-UP
6	6212-61-6430	O RING	4	SN: 10001-UP
7	01435-00890	BOLT	26	SN: 10001-UP
8	01436-01000	BOLT	4	SN: 10001-UP
9	6210-11-4811	GASKET	12	SN: 10449-UP
10	01011-81065	BOLT	3	SN: 10001-UP
11	01011-81060	BOLT	9	SN: 10001-UP
12	01011-81000	BOLT	9	SN: 10001-UP
13	01643-31032	WASHER	27	SN: 10001-UP
14	01011-81005	BOLT	3	SN: 10001-UP
15	426-01-11310	BRACKET	4	SN: 10001-UP
16	600-815-4291	HEATER, RIBBON	6	SN: 10713-UP
17	6215-11-4330	CONNECTOR, AIR	1	SN: 10001-UP
18	6212-11-4721	GASKET	1	SN: 10449-UP
19	01435-01035	BOLT	4	SN: 10001-UP
20	01436-01080	BOLT	2	SN: 10001-UP
21	07042-70108	PLUG	2	SN: 10001-UP
22	6211-11-4410	CONNECTOR	1	SN: 10001-UP
23	02895-77075	O RING	4	SN: 10449-UP
24	07043-70108	PLUG	1	SN: 10001-UP

Reference: A1310-B7A2A

Get the complete PDF catalogue

Komatsu SA12V140-1GD (JPN) G-SA12V140-1GD-A1 FOR GENERATOR DENYO DCA800PK S/N 10001-UP (JAPANESE)

$89

with PayPal | Store cart: $99

Buy this PDF on Manuals Komatsu

Check the model, serial range and language before payment.

Download instructions are emailed after payment confirmation.

This free sample contains 10 catalogue pages.