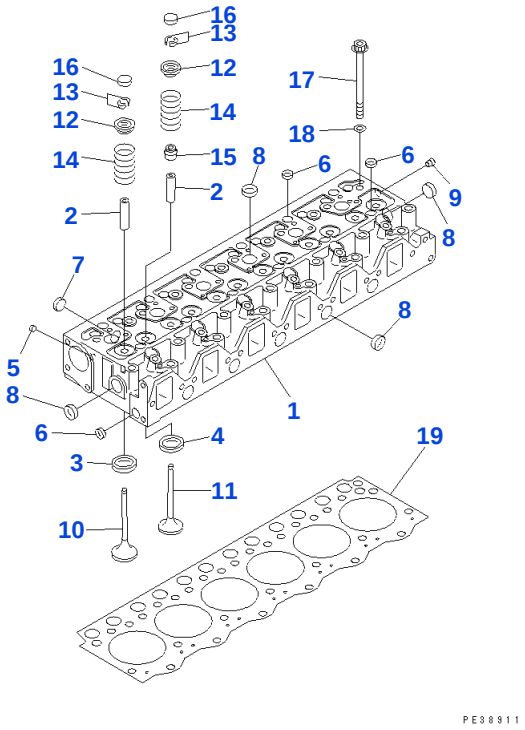

Reference: A1010-A0B5

030010 CYLINDER HEAD

Item	Part No.	Part Name	Qty	Options
	6209-11-1100	CYLINDER HEAD ASSEMBLY, WITHOUT VALVE	1	SN: 63305-UP
1		• ☆ HEAD, CYLINDER	1	SN: 63305-UP
2	6204-19-1310	• GUIDE, VALVE	12	SN: 63305-UP
3	6209-11-1430	• SEAT, INTAKE VALVE (STD)	6	SN: 63305-UP
3	6209-19-1430	• SEAT, 0.25MM, INTAKE VALVE (OS)	6	SN: 63305-UP
3	6209-18-1430	• SEAT, 0.50MM, INTAKE VALVE (OS)	6	SN: 63305-UP
4	6207-11-1440	• SEAT, EXHAUST VALVE (STD)	6	SN: 63305-UP
4	6207-19-1440	• SEAT, EXHAUST VALVE (OS)	6	SN: 63305-UP
4	6207-18-1440	• SEAT, 0.50MM, EXHAUST VALVE (OS)	6	SN: 63305-UP
5	07046-41008	• PLUG	6	SN: 63305-UP
6	07046-41810	• PLUG	13	SN: 63305-UP
7	07046-42216	• PLUG	5	SN: 63305-UP
8	07046-42516	• PLUG	15	SN: 63305-UP
9	02720-40104	• PLUG	1	SN: 63305-UP
10	6209-41-4110	VALVE,INTAKE	6	SN: 63305-UP
11	6209-41-4210	VALVE, EXHAUST	6	SN: 63305-UP
12	6204-41-4510	SEAT, SPRING	12	SN: 63305-UP
13	6204-41-4520	COTTER	24	SN: 63305-UP
14	6204-41-4431	SPRING, VALVE	12	SN: 63305-UP
15	6204-41-4540	SEAL, VALVE	6	SN: 63305-UP
16	6204-41-4550	CAP,VALVE STEM	12	SN: 63305-UP
17	6204-13-1610	BOLT	25	SN: 63305-UP
18	01643-51232	WASHER	25	SN: 63305-UP
19	6206-11-1830	GASKET, HEAD	1	SN: 63305-UP

Catalog signs: ☆ not supplied separately: assembly only

Reference: A1010-A0B5

Open this exact parts catalogue on K-Part

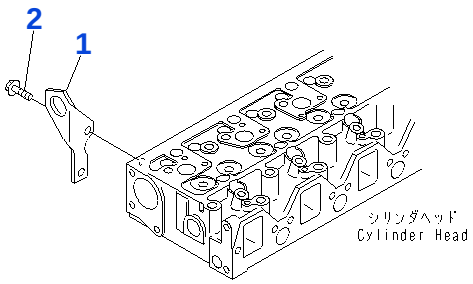

PD38198

Reference: A1030-A0A2

030020 FRONT HANGER

Item	Part No.	Part Name	Qty	Options
1	6206-11-1930	HANGER, FRONT	1	SN: 26000-UP
2	01435-01020	BOLT	2	SN: 26000-UP

Reference: A1030-A0A2

Open this exact parts catalogue on K-Part

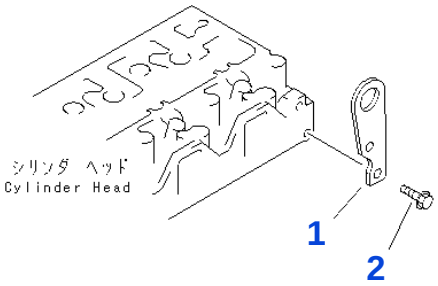

PD38331

Reference: A1050-A0A7

030030 REAR HANGER

Item	Part No.	Part Name	Qty	Options
1	6206-11-1960	HANGER, REAR	1	SN: 39268-UP
1	6206-11-1910	☐ HANGER, REAR	1	SN: 26000-39267
2	01435-01020	BOLT	2	SN: 26000-UP

Catalog signs: ☐ part above may be used instead

Reference: A1050-A0A7

Open this exact parts catalogue on K-Part

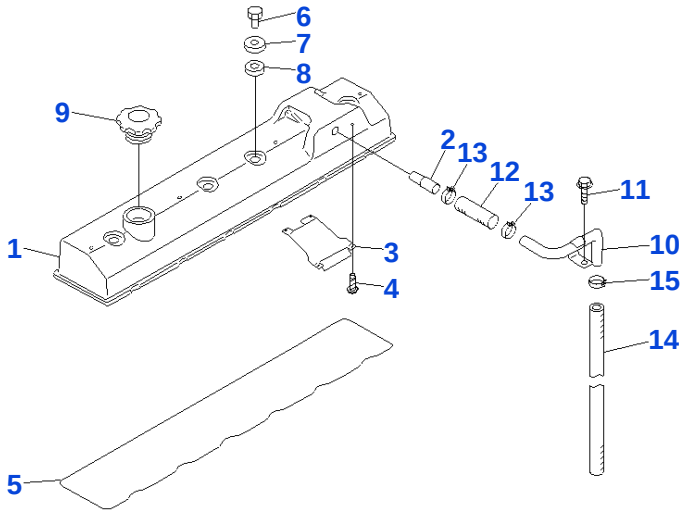

Reference: A1110-A0B3

030040 HEAD COVER

Item	Part No.	Part Name	Qty	Options
	6207-11-8100	HEAD COVER ASSEMBLY	1	SN: 26000-UP
1	6207-11-8110	• COVER, HEAD	1	SN: 26000-UP
2	6207-11-8170	• TUBE	1	SN: 26000-UP
3	6207-11-8140	• PLATE	1	SN: 26000-UP
4	04418-02550	• SCREW	4	SN: 26000-UP
5	6206-11-8810	O RING	1	SN: 26000-UP
6	6136-11-8120	NAT	4	SN: 26000-UP
7	6136-11-8130	WASHER	4	SN: 26000-UP
8	6136-11-8142	PACKING	4	SN: 26000-UP
9	6130-12-8610	CAP	1	SN: 26000-UP
10	6207-11-8910	TUBE, BREATHER	1	SN: 26000-UP
11	01435-21020	BOLT	1	SN: 26000-UP
12	07286-01606	HOSE	1	SN: 26000-UP
13	07285-00180	CLIP	2	SN: 26000-UP
14	07286-01670	HOSE	1	SN: 26000-UP
15	07285-00180	CLIP	1	SN: 26000-UP

Reference: A1110-A0B3

Open this exact parts catalogue on K-Part

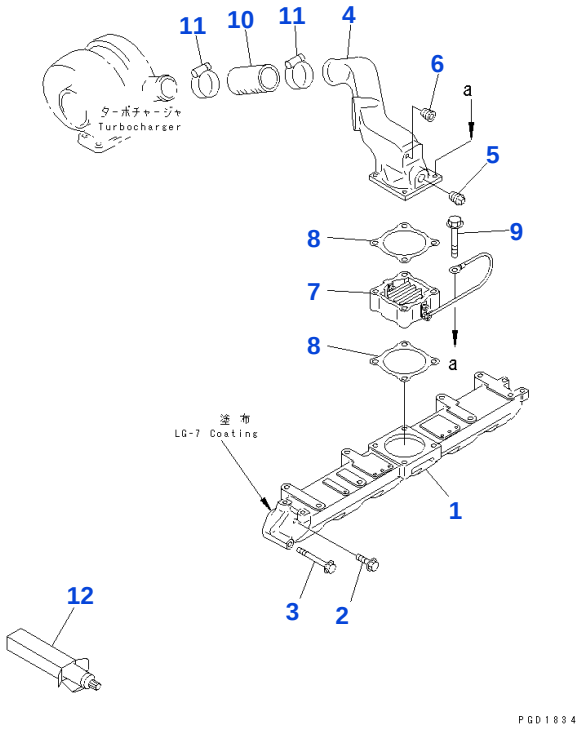

Reference: A131A-A0C8

030050 AIR INTAKE MANIFOLD (WITH RIBBON HEATER)(#26000-41612)

Item	Part No.	Part Name	Qty	Options
1	6206-11-4110	MANIFOLD, AIR INTAKE	1	SN: 26000-41612
2	01435-21030	BOLT	11	SN: 26000-41612
3	01435-21085	BOLT	1	SN: 26000-41612
4	6207-11-4380	CONNECTOR, AIR	1	SN: 26000-@
5	07042-70415	PLUG	1	SN: 26000-@
6	07043-50108	PLUG	1	SN: 26000-@
7	600-815-2341	HEATER, RIBBON	1	SN: 26000-@
8	6136-11-4820	GASKET	2	SN: 26000-@
9	01435-21070	BOLT	4	SN: 26000-@
10	6207-11-4370	HOSE	1	SN: 26000-@
11	07281-00709	CLAMP	2	SN: 26000-@
12	09920-00150	EXHAUST GASKET, LG-7, 150G	-2	SN: 26000-@

Reference: A131A-A0C8

Open this exact parts catalogue on K-Part

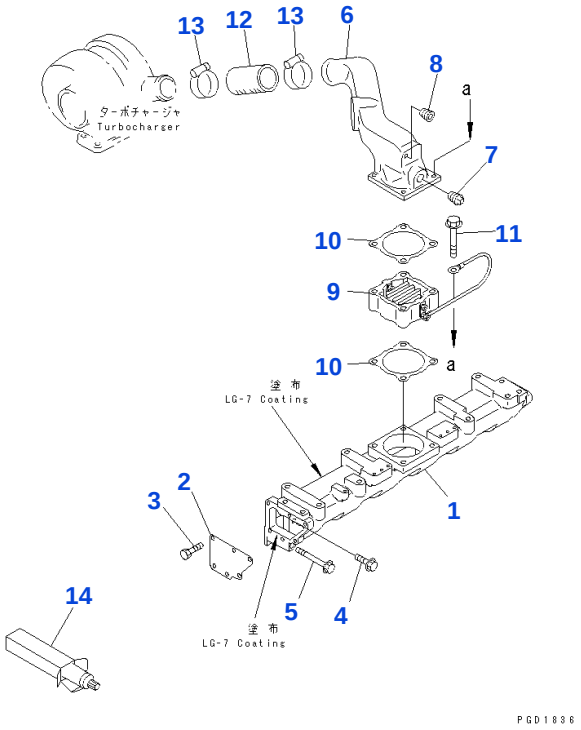

Reference: A1310-A0C8

030060 AIR INTAKE MANIFOLD (WITH RIBBON HEATER)(#41613-)

Item	Part No.	Part Name	Qty	Options
	6206-11-4170	INTAKE MANIFOLD ASSEMBLY	1	SN: 41613-UP
1	6206-11-4140	• MANIFOLD, AIR INTAKE	1	SN: 41613-UP
2	6206-11-4150	• PLATE	2	SN: 41613-UP
3	6206-11-4160	• BOLT	12	SN: 41613-UP
4	01435-21030	BOLT	10	SN: 41613-UP
5	01435-21085	BOLT	2	SN: 41613-UP
6	6207-11-4380	CONNECTOR, AIR	1	SN: 26000-UP
7	07042-70415	PLUG	1	SN: 26000-UP
8	07043-50108	PLUG	1	SN: 26000-UP
9	600-815-2341	HEATER, RIBBON	1	SN: 26000-UP
10	6136-11-4850	GASKET	2	SN: 100025-UP
10	6136-11-4820	☐ GASKET	2	SN: 26000-100024
11	01435-21070	BOLT	4	SN: 26000-UP
12	6207-11-4370	HOSE	1	SN: 26000-UP
13	07281-00709	CLAMP	2	SN: 26000-UP
14	09920-00150	EXHAUST GASKET, LG-7, 150G	-2	SN: 26000-UP

Catalog signs: ☐ part above may be used instead

Reference: A1310-A0C8

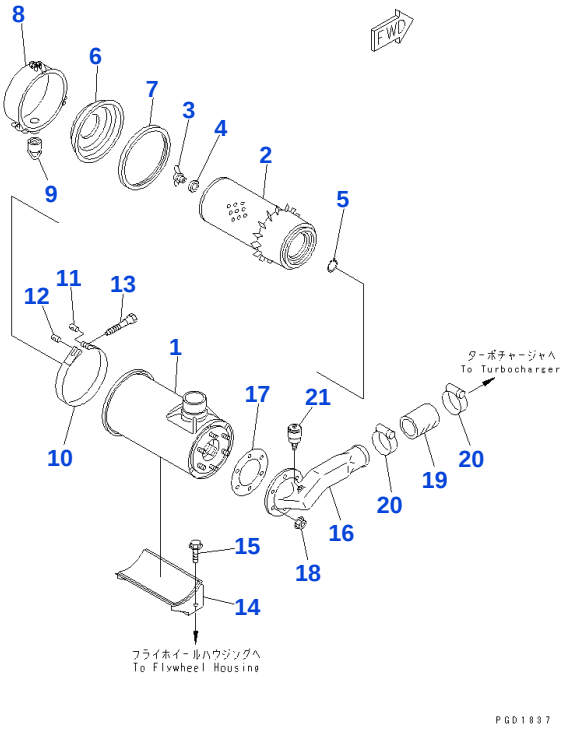

Reference: A1410-A0C5

030070 AIR CLEANER (SINGLE ELEMENT TYPE) (WITH MECHANICAL DUST INDICATOR)

Item	Part No.	Part Name	Qty	Options
	6206-81-1100	AIR CLEANER ASSEMBLY	1	SN: 26000-UP
1	6134-81-7210	• BODY	1	SN: 26000-UP
	600-181-9200	• ELEMENT ASSEMBLY	1	SN: 26000-UP
2		• • ☆ ELEMENT	1	SN: 26000-UP
3	600-181-8640	• • NUT,WING	1	SN: 26000-UP
4	600-181-7511	• • WASHER, SEAL	1	SN: 26000-UP
5	04064-01510	• • RING, SNAP	1	SN: 26000-UP
6	600-181-9551	• DIVIDER	1	SN: 26000-UP
7	600-181-9430	• GASKET	1	SN: 26000-UP
8	600-181-9541	• PAN, DUST	1	SN: 26000-UP
9	600-181-7680	• VALVE	1	SN: 26000-UP
10	6134-11-4610	BAND	1	SN: 26000-UP
11	6110-21-6530	PIN	1	SN: 26000-UP
12	6110-21-6540	PIN, WITH NUT	1	SN: 26000-UP
13	6110-23-6520	BOLT	1	SN: 26000-UP
14	6206-11-4420	BRACKET	1	SN: 26000-UP
15	01435-21020	BOLT	4	SN: 26000-UP
16	6207-11-4220	CONNECTOR, AIR	1	SN: 26000-UP
17	6110-11-4431	GASKET	1	SN: 91616-UP
17	6110-11-4430	☐ GASKET	1	SN: 26000-91615
18	01584-00806	NAT	6	SN: 26000-UP
19	6207-11-4611	HOSE	1	SN: 91616-UP
19	6207-11-4610	☐ HOSE	1	SN: 26000-91615
20	07289-00070	CLAMP	2	SN: 91616-UP
20	07281-00809	☐ CLAMP	2	SN: 32536-91615
20	07281-00709	☐ CLAMP	2	SN: 26000-32535
21	08670-02001	INDICATOR, DUST	1	SN: 26000-UP

Catalog signs: ☆ not supplied separately: assembly only ☐ part above may be used instead

Reference: A1410-A0C5

Open this exact parts catalogue on K-Part

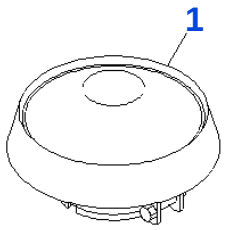

PFD1727

Reference: A1470-A0A2

030080 AIR CLEANER CAP (RAIN CAP)

Item	Part No.	Part Name	Qty	Options
1	600-181-3840	CAP, RAIN	1	SN: 26000-UP

Reference: A1470-A0A2

Open this exact parts catalogue on K-Part

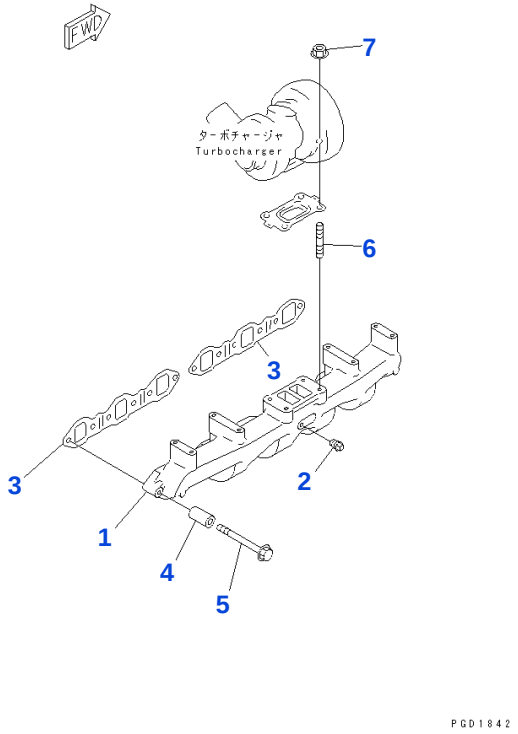

Reference: A1510-A0C1

030090 EXHAUST MANIFOLD

Item	Part No.	Part Name	Qty	Options
1	6207-11-5170	MANIFOLD, EXHAUST	1	SN: 93371-UP
1	6207-11-5120	◆ MANIFOLD, EXHAUST	1	SN: 26000-93370
2	07042-20108	PLUG	1	SN: 27819-UP
2	07042-20108	PLUG	2	SN: 26000-27818
3	6207-11-5810	GASKET	2	SN: 26000-UP
4	6134-11-5120	SPACER	12	SN: 26000-UP
5	01435-01090	BOLT	12	SN: 26000-UP
6	01140-61025	STUD	4	SN: 26000-UP
7	6142-12-5850	NAT	4	SN: 26000-UP

Catalog signs: ◆ interchangeable with part above

Reference: A1510-A0C1

Open this exact parts catalogue on K-Part

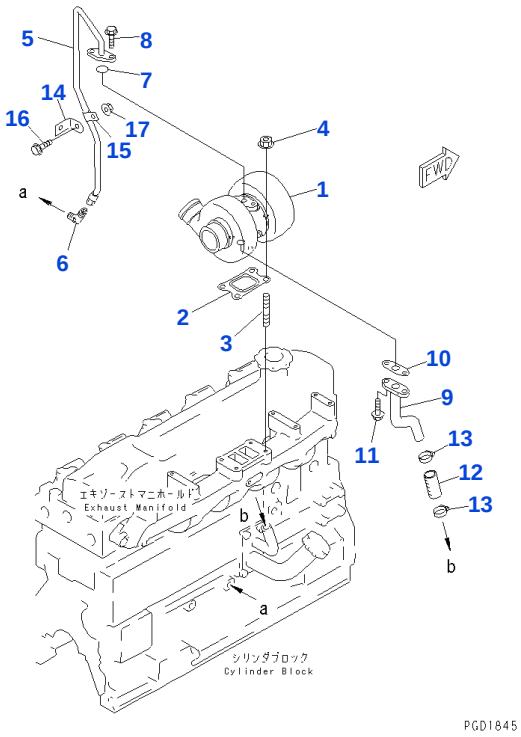

Reference: A1530-A0A4

030100 TURBOCHARGER AND OIL PIPING

Item	Part No.	Part Name	Qty	Options
1	6207-81-8230	TURBOCHARGER ASSEMBLY	1	SN: 26000-UP
2	6207-11-5580	GASKET	1	SN: 26000-UP
3	01140-61025	STUD, (EXHAUST MANIFOLD REFERENCE)	4	SN: 26000-UP
4	6142-12-5850	NUT, (EXHAUST MANIFOLD REFERENCE)	4	SN: 26000-UP
5	6207-51-8110	PIPE	1	SN: 26000-UP
6	6207-51-8150	ERBO	1	SN: 26000-UP
7	07000-62018	O RING	1	SN: 26000-UP
8	01435-20820	BOLT	2	SN: 26000-UP
9	6207-51-8310	PIPE	1	SN: 26000-UP
10	6207-51-7690	GASKET	1	SN: 93371-UP
10	6131-51-7681	◆ GASKET	1	SN: 26000-93370
11	01435-20820	BOLT	2	SN: 26000-UP
12	6207-51-8350	HOSE	1	SN: 26000-UP
13	07281-00289	CLAMP	2	SN: 35328-UP
13	07281-00359	□ CLAMP	2	SN: 26000-35327
14	6207-51-8180	BRACKET	1	SN: 26000-UP
15	6207-51-8190	CLIP	1	SN: 26000-UP
16	01435-20816	BOLT	1	SN: 26000-UP
17	01584-20806	NAT	1	SN: 26000-UP

Catalog signs: ◆ interchangeable with part above □ part above may be used instead

Reference: A1530-A0A4

Open this exact parts catalogue on K-Part

Get the complete PDF catalogue

Komatsu S6D95L-1G1 (JPN) G-S6D95L-1G1-D4 FOR GENERATOR TOKYO DENKI S/N 26000-UP (JAPANESE)

$89

with PayPal | Store cart: $99

Buy this PDF on Manuals Komatsu

Check the model, serial range and language before payment.

Download instructions are emailed after payment confirmation.

This free sample contains 10 catalogue pages.