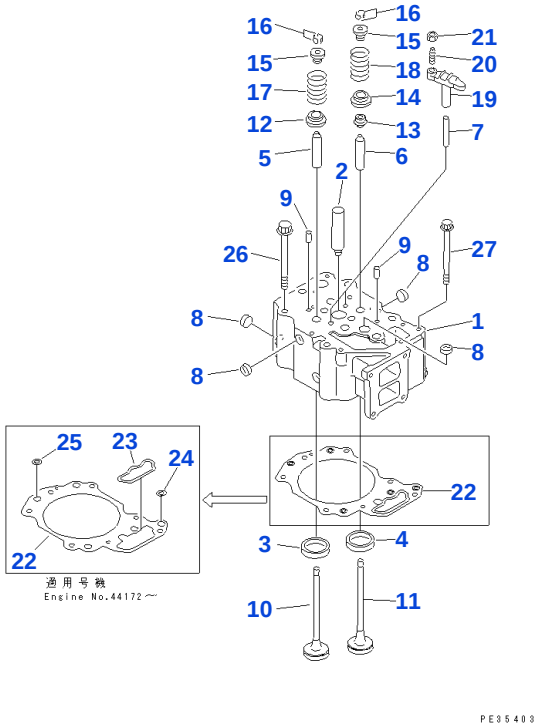

Reference: A1010-A3A1

030010 CYLINDER HEAD(#21000-68086)

Item	Part No.	Part Name	Qty	Options
	6151-11-1100	CYLINDER HEAD ASSEMBLY, WITHOUT VALVE	6	SN: 21000-68086
1		• ☆ HEAD, CYLINDER	1	SN: 21000-68086
2	6136-11-1130	• SLEEVE	1	SN: 21000-@
3	6150-11-1331	• INSERT, INTAKE VALVE (STD)	2	SN: 21000-68086
3	6150-19-1331	• INSERT, 0.25MM, INTAKE VALVE (OS)	2	SN: 21000-68086
3	6150-18-1331	• INSERT, 0.50MM, INTAKE VALVE (OS)	2	SN: 21000-68086
3	6150-17-1331	• INSERT, 0.75MM, INTAKE VALVE (OS)	2	SN: 21000-68086
3	6150-16-1331	• INSERT, 1.00MM, INTAKE VALVE (OS)	2	SN: 21000-68086
4	6150-11-1320	• INSERT, EXHAUST VALVE (STD)	2	SN: 21000-@
4	6150-19-1320	• INSERT, 0.25MM, EXHAUST VALVE (OS)	2	SN: 21000-@
4	6150-18-1320	• INSERT, 0.50MM, EXHAUST VALVE (OS)	2	SN: 21000-@
4	6150-17-1320	• INSERT, 0.75MM, EXHAUST VALVE (OS)	2	SN: 21000-@
4	6150-16-1320	• INSERT, 1.00MM, EXHAUST VALVE (OS)	2	SN: 21000-@
5	6150-12-1341	• GUIDE, INTAKE VALVE	2	SN: 21000-@
6	6150-12-1351	• GUIDE, EXHAUST VALVE	2	SN: 21000-@
7	6150-11-1140	• GUIDE	2	SN: 21000-@
8	6162-13-1150	• PLUG	8	SN: 21000-@
9	04020-00820	• PIN, DOWEL	2	SN: 21000-@
10	6150-41-4111	VALVE, INTAKE	12	SN: 21000-@
11	6150-41-4210	VALVE, EXHAUST	12	SN: 21000-@
12	6150-41-4540	ROTATOR, INTAKE VALVE	12	SN: 21000-@
13	6150-41-4560	SEAL, EXHAUST VALVE	12	SN: 42035-@
13	6140-41-4540	□ SEAL	12	SN: 21000-42034
14	6150-41-4430	SEAT, LOWER	12	SN: 21000-@
15	6150-41-4510	SEAT, UPPER	24	SN: 21000-@
16	6136-42-4520	COTTER	48	SN: 21000-@
17	6150-41-4420	SPRING, INTAKE	12	SN: 21000-@
18	6150-41-4411	SPRING, EXHAUST	12	SN: 21000-@
	6150-41-5600	CROSSHEAD ASSEMBLY	12	SN: 21000-@
19	6150-41-5611	• CROSSHEAD	1	SN: 21000-@
20	6150-41-5620	• SCREW	1	SN: 21000-@
21	6150-41-5630	• NAT	1	SN: 21000-@
22	6150-17-1813	GASKET, HEAD	6	SN: 48544-@

Open this exact parts catalogue on K-Part

Item	Part No.	Part Name	Qty	Options
22	6150-17-1812	☐ GASKET, HEAD	6	SN: 44172-48543
22	6150-11-1812	☐ GASKET, HEAD	6	SN: 25415-44171
22	6150-11-1811	☐ GASKET, HEAD	6	SN: 21000-25414
23	6150-11-1920	• GROMMET, OIL	1	SN: 44172-@
24	6150-11-1930	• GROMMET, OIL	1	SN: 44172-@
25		• ☆ GROMMET, WATER	4	SN: 48544-@
25		• ☆ GROMMET, WATER	4	SN: 44172-48543
26	6150-11-1610	BOLT	36	SN: 21000-@
27	01438-01020	BOLT	6	SN: 48544-68086
27	6150-81-9160	◆ BOLT	6	SN: 21000-48543

Catalog signs: ☆ not supplied separately: assembly only ☐ part above may be used instead ◆ interchangeable with part above

Reference: A1010-A3A1

Open this exact parts catalogue on K-Part

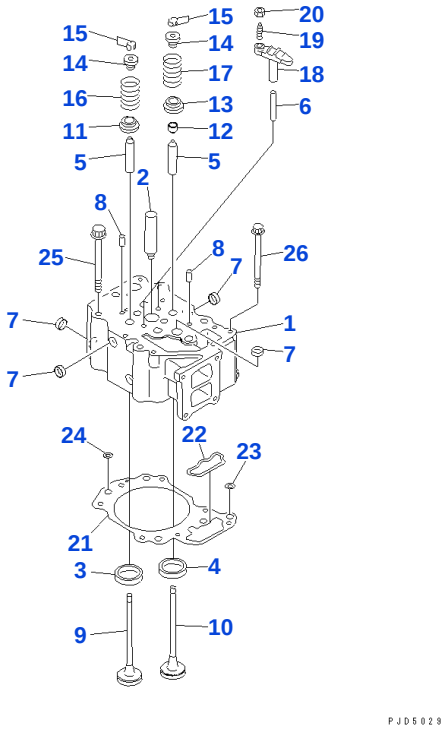

Reference: A1010-A3A1A

030020 CYLINDER HEAD (#68067-)

Item	Part No.	Part Name	Qty	Options
	6151-11-1102	CYLINDER HEAD ASSEMBLY, WITHOUT VALVE	6	SN: 68067-UP
1		• ☆ HEAD, CYLINDER	1	SN: 21000-UP
2	6136-11-1130	• SLEEVE	1	SN: 21000-UP
3	6151-11-1330	• INSERT, INTAKE VALVE (STD)	2	SN: 68067-UP
3	6151-19-1330	• INSERT, 0.25MM, INTAKE VALVE (OS)	2	SN: 68067-UP
3	6151-18-1330	• INSERT, 0.50MM, INTAKE VALVE (OS)	2	SN: 68067-UP
3	6151-17-1330	• INSERT, 0.75MM, INTAKE VALVE (OS)	2	SN: 68067-UP
3	6151-16-1330	• INSERT, 1.00MM, INTAKE VALVE (OS)	2	SN: 68067-UP
4	6150-11-1320	• INSERT, EXHAUST VALVE (STD)	2	SN: 21000-UP
4	6150-19-1320	• INSERT, 0.25MM, EXHAUST VALVE (OS)	2	SN: 21000-UP
4	6150-18-1320	• INSERT, 0.50MM, EXHAUST VALVE (OS)	2	SN: 21000-UP
4	6150-17-1320	• INSERT, 0.75MM, EXHAUST VALVE (OS)	2	SN: 21000-UP
4	6150-16-1320	• INSERT, 1.00MM, EXHAUST VALVE (OS)	2	SN: 21000-UP
5	6150-12-1341	• GUIDE, VALVE	4	SN: 21000-UP
6	6150-11-1140	• GUIDE	2	SN: 21000-UP
7	6162-13-1150	• PLUG	8	SN: 21000-UP
8	04020-00820	• PIN, DOWEL	2	SN: 21000-UP
9	6150-41-4111	VALVE, INTAKE	12	SN: 21000-UP
10	6150-41-4210	VALVE, EXHAUST	12	SN: 21000-UP
11	6150-41-4540	ROTATOR, INTAKE VALVE	12	SN: 21000-UP
12	6150-41-4570	SEAL, EXHAUST VALVE	12	SN: 42035-UP
13	6150-41-4430	SEAT, LOWER	12	SN: 21000-UP
14	6150-41-4510	SEAT, UPPER	24	SN: 21000-UP
15	6136-42-4520	COTTER	48	SN: 21000-UP
16	6150-41-4420	SPRING, INTAKE	12	SN: 21000-UP
17	6150-41-4411	SPRING, EXHAUST	12	SN: 21000-UP
	6150-41-5600	CROSSHEAD ASSEMBLY	12	SN: 21000-UP
18	6150-41-5611	• CROSSHEAD	1	SN: 21000-UP
19	6150-41-5621	• SCREW	1	SN: .-UP
19	6150-41-5620	• □ SCREW	1	SN: 21000-.
20	6150-41-5630	• NAT	1	SN: 21000-UP
21	6150-17-1813	GASKET, HEAD	6	SN: 48544-UP
22	6150-11-1920	• GROMMET, OIL	1	SN: 21000-UP

Open this exact parts catalogue on K-Part

Item	Part No.	Part Name	Qty	Options
23	6150-11-1930	• GROMMET, OIL	1	SN: 21000-UP
24		• ☆ GROMMET, WATER	4	SN: 48544-UP
25	6150-11-1610	BOLT	36	SN: 21000-UP
26	01438-01020	BOLT	6	SN: 48544-UP

Catalog signs: ☆ not supplied separately: assembly only ☐ part above may be used instead

Reference: A1010-A3A1A

Open this exact parts catalogue on K-Part

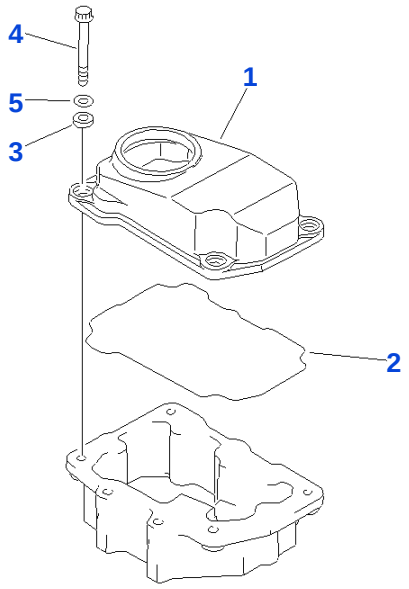

PE38392

Reference: A1110-A3A1

030030 HEAD COVER

Item	Part No.	Part Name	Qty	Options
1	6150-11-8111	COVER, HEAD	6	SN: 21000-UP
2	6150-11-8810	GASKET	6	SN: 21000-UP
3	6150-11-8820	RUBBER	24	SN: 21000-UP
4	6150-81-9370	BOLT	24	SN: 21000-UP
5	01640-21016	WASHER	24	SN: 21000-UP

Reference: A1110-A3A1

Open this exact parts catalogue on K-Part

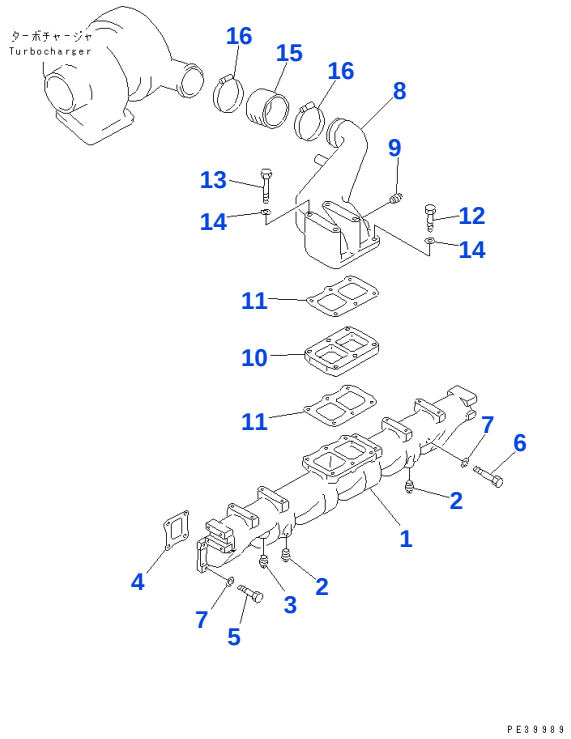

Reference: A1310-A3C8

030040 AIR INTAKE

Item	Part No.	Part Name	Qty	Options
	6151-11-4910	INTAKE MANIFOLD ASSEMBLY	1	SN: 21000-UP
1		• ☆ MANIFOLD, AIR INTAKE	1	SN: 21000-UP
2	07042-00108	• PLUG	2	SN: 21000-UP
3	07042-00415	• PLUG	1	SN: 21000-UP
4	6150-13-4810	GASKET	6	SN: 21000-UP
5	01010-51030	BOLT	16	SN: 21000-UP
6	01011-51010	BOLT	8	SN: 21000-UP
7	01640-21016	WASHER	24	SN: 21000-UP
8	6151-11-4311	CONNECTOR, AIR	1	SN: 21000-UP
9	07042-00108	PLUG	1	SN: 21000-UP
10	6150-11-4990	SPACER	1	SN: 21000-UP
11	6150-11-4821	GASKET	2	SN: 22880-UP
11	6150-11-4820	☐ GASKET	2	SN: 21000-22879
12	01010-51055	BOLT	2	SN: 21000-UP
13	01011-51065	BOLT	4	SN: 21000-UP
14	01641-21016	WASHER	6	SN: 21000-UP
15	6151-11-4410	HOSE	1	SN: 21000-UP
16	07281-01029	CLAMP	2	SN: 21000-UP

Catalog signs: ☆ not supplied separately: assembly only ☐ part above may be used instead

Reference: A1310-A3C8

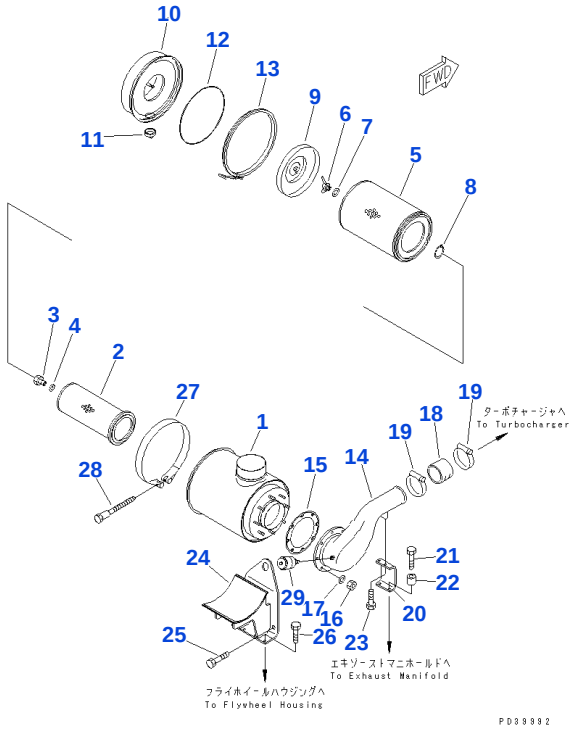

Reference: A1410-A3E1

030050 AIR CLEANER(#21000-72914)

Item	Part No.	Part Name	Qty	Options
	6711-81-7100	AIR CLEANER ASSEMBLY	1	SN: 21000-@
1	6711-81-7110	• BODY	1	SN: 21000-@
	6125-81-7032	• ELEMENT ASSEMBLY	1	SN: 21000-@
2		• • ☆ ELEMENT, INNER	1	SN: 21000-@
3	600-181-9671	• • NAT	1	SN: 21000-@
4	600-181-7511	• • WASHER, SEAL	1	SN: 21000-@
	600-181-4300	• • ELEMENT ASSEMBLY, OUTER	1	SN: 21000-@
5		• • • ☆ ELEMENT, OUTER	1	SN: 21000-@
6	600-181-1990	• • • NUT, WING	1	SN: 21000-@
7	600-181-4591	• • • WASHER, SEAL	1	SN: 21000-@
8	04064-01510	• • • RING, SNAP	1	SN: 21000-@
9	6710-82-7130	• BAFFLE	1	SN: 21000-@
10	6710-82-7121	• CUP	1	SN: 21000-@
11	600-181-1590	• VALVE	1	SN: 21000-@
12	6127-81-7190	• O-RING	1	SN: 21000-@
13	600-181-1480	• CLAMP	1	SN: 21000-@
14	6151-11-4250	CONNECTOR	1	SN: 21000-@
15	6127-81-4824	GASKET	1	SN: 27785-@
15	6127-81-4821	□ GASKET	1	SN: 21000-27784
16	01580-11008	NAT	8	SN: 21000-@
17	01640-21016	WASHER	8	SN: 21000-@
18	6151-11-4450	HOSE	1	SN: 21000-72914
19	07281-01159	CLAMP	2	SN: 21000-@
20	6151-11-4620	BRACKET	1	SN: 21000-72914
21	01010-31040	BOLT	2	SN: 21000-@
22	6631-11-5630	SPACER	2	SN: 21000-@
23	01010-51025	BOLT	2	SN: 21000-@
24	6151-11-4550	BRACKET	1	SN: 21000-@
25	01010-51665	BOLT	2	SN: 21000-@
26	01010-51025	BOLT	4	SN: 21000-@
27	6691-13-4610	BAND ASSEMBLY	1	SN: 21000-@
27	6691-21-6560	• PIN, WITH THREAD	1	SN: 21000-@
27	6691-21-6550	• PIN	1	SN: 21000-@

Open this exact parts catalogue on K-Part

Item	Part No.	Part Name	Qty	Options
28	6643-11-4641	BOLT	1	SN: 21000-@
29	08670-02001	INJECTOR, DUST	1	SN: 21000-@

Catalog signs: ☆ not supplied separately: assembly only ☐ part above may be used instead

Reference: A1410-A3E1

Open this exact parts catalogue on K-Part

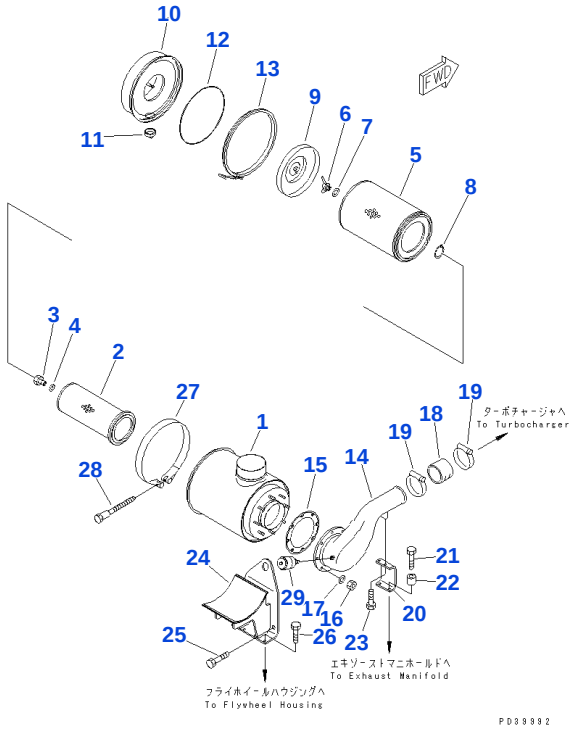

Reference: A1410-A3E1A

030060 AIR CLEANER (#72915-)

Item	Part No.	Part Name	Qty	Options
	6711-81-7100	AIR CLEANER ASSEMBLY	1	SN: 21000-UP
1	6711-81-7110	• BODY	1	SN: 21000-UP
	6125-81-7032	• ELEMENT ASSEMBLY	1	SN: 21000-UP
2		• • ☆ ELEMENT, INNER	1	SN: 21000-UP
3	600-181-9671	• • NAT	1	SN: 21000-UP
4	600-181-7511	• • WASHER, SEAL	1	SN: 21000-UP
	600-181-4300	• • ELEMENT ASSEMBLY, OUTER	1	SN: 21000-UP
5		• • • ☆ ELEMENT, OUTER	1	SN: 21000-UP
6	600-181-1990	• • • NUT, WING	1	SN: 21000-UP
7	600-181-4591	• • • WASHER, SEAL	1	SN: 21000-UP
8	04064-01510	• • • RING, SNAP	1	SN: 21000-UP
9	6710-82-7130	• BAFFLE	1	SN: 21000-UP
10	6710-82-7121	• CUP	1	SN: 21000-UP
11	600-181-1590	• VALVE	1	SN: 21000-UP
12	6127-81-7190	• O-RING	1	SN: 21000-UP
13	600-181-1480	• CLAMP	1	SN: 21000-UP
14	6151-11-4250	CONNECTOR	1	SN: 21000-UP
15	6127-81-4824	GASKET	1	SN: 27785-UP
16	01580-11008	NAT	8	SN: 21000-UP
17	01640-21016	WASHER	8	SN: 21000-UP
18	6151-11-4450	HOSE	1	SN: 21000-UP
19	07289-00105	CLAMP	2	SN: 72915-UP
20	6151-11-4620	BRACKET	1	SN: 21000-UP
21	01010-E1040	BOLT	2	SN: 72915-UP
22	6631-11-5630	SPACER	2	SN: 21000-UP
23	01010-81025	BOLT	2	SN: 72915-UP
24	6151-11-4550	BRACKET	1	SN: 21000-UP
25	01010-51665	BOLT	2	SN: 21000-UP
26	01010-81025	BOLT	4	SN: 21000-UP
27	6691-13-4610	BAND ASSEMBLY	1	SN: 21000-UP
27	6691-21-6560	• PIN, WITH THREAD	1	SN: 21000-UP
27	6691-21-6550	• PIN	1	SN: 21000-UP
28	6643-11-4641	BOLT	1	SN: 21000-UP

Open this exact parts catalogue on K-Part

Item	Part No.	Part Name	Qty	Options
29	08670-02001	INJECTOR, DUST	1	SN: 21000-UP

Catalog signs: ☆ not supplied separately: assembly only

Reference: A1410-A3E1A

Open this exact parts catalogue on K-Part

Get the complete PDF catalogue

Komatsu S6D125-1G2 (JPN) G-S6D125-1G2-E4 FOR GENERATOR STATIONARY EMERGENCY TOKYO ELECTRIC RADIATOR S/N 21000-UP (JAPANESE)

$89

with PayPal | Store cart: $99

Buy this PDF on Manuals Komatsu

Check the model, serial range and language before payment.

Download instructions are emailed after payment confirmation.

This free sample contains 10 catalogue pages.