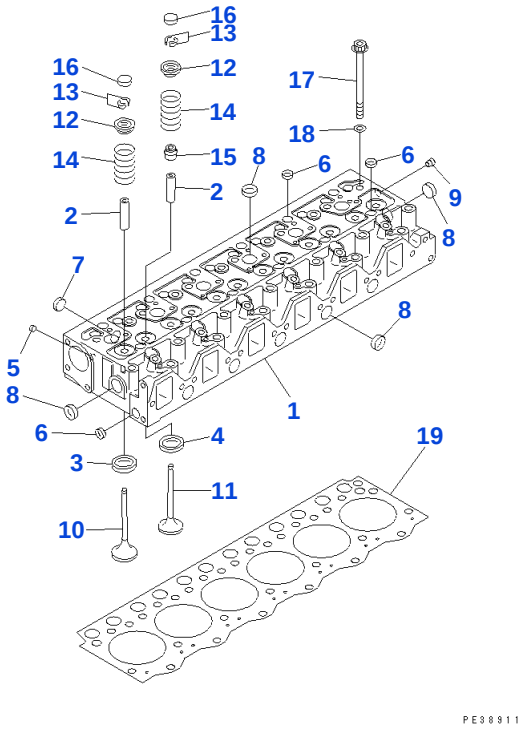

Reference: A1010-A0B5

030010 CYLINDER HEAD

Item	Part No.	Part Name	Qty	Options
	6209-11-1100	CYLINDER HEAD ASSEMBLY, WITHOUT VALVE	1	SN: 100001-UP
1		• ☆ HEAD, CYLINDER	1	SN: 100001-UP
2	6204-19-1310	• GUIDE, VALVE	12	SN: 100001-UP
3	6209-11-1430	• SEAT, INTAKE VALVE (STD)	6	SN: 100001-UP
3	6209-19-1430	• SEAT, 0.25MM, INTAKE VALVE (OS)	6	SN: 100001-UP
3	6209-18-1430	• SEAT, 0.50MM, INTAKE VALVE (OS)	6	SN: 100001-UP
4	6207-11-1440	• SEAT, EXHAUST VALVE (STD)	6	SN: 100001-UP
4	6207-19-1440	• SEAT, EXHAUST VALVE (OS)	6	SN: 100001-UP
4	6207-18-1440	• SEAT, 0.50MM, EXHAUST VALVE (OS)	6	SN: 100001-UP
5	07046-41008	• PLUG	6	SN: 100001-UP
6	07046-41810	• PLUG	13	SN: 100001-UP
7	07046-42216	• PLUG	5	SN: 100001-UP
8	07046-42516	• PLUG	15	SN: 100001-UP
9	02720-40104	• PLUG	1	SN: 100001-UP
10	6209-41-4110	VALVE, INTAKE	6	SN: 100001-UP
11	6209-41-4210	VALVE, EXHAUST	6	SN: 100001-UP
12	6204-41-4510	SEAT, SPRING	12	SN: 100001-UP
13	6204-41-4520	COTTER	24	SN: 100001-UP
14	6204-41-4431	SPRING, VALVE	12	SN: 100001-UP
15	6204-41-4540	SEAL, VALVE	6	SN: 100001-UP
16	6204-41-4550	CAP, VALVE STEM	12	SN: 100001-UP
17	6204-13-1610	BOLT	25	SN: 100001-UP
18	01643-51232	WASHER	25	SN: 100001-UP
19	6206-11-1830	GASKET, HEAD	1	SN: 100001-UP

Catalog signs: ☆ not supplied separately: assembly only

Reference: A1010-A0B5

Open this exact parts catalogue on K-Part

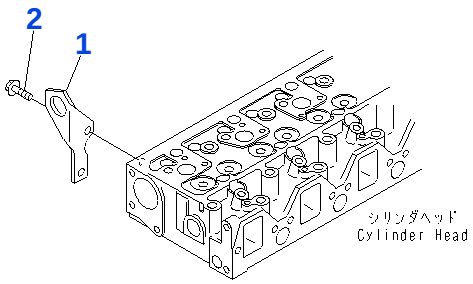

PD38198

Reference: A1030-A0A2

030020 FRONT HANGER

Item	Part No.	Part Name	Qty	Options
1	6206-11-1930	HANGER, FRONT	1	SN: 26000-UP
2	01435-01020	BOLT	2	SN: 26000-UP

Reference: A1030-A0A2

Open this exact parts catalogue on K-Part

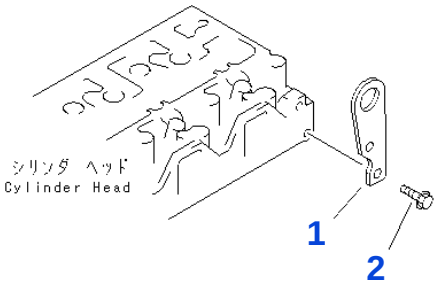

PD38331

Reference: A1050-A0A7

030030 REAR HANGER

Item	Part No.	Part Name	Qty	Options
1	6206-11-1960	HANGER, REAR	1	SN: 39268-UP
1	6206-11-1910	☐ HANGER, REAR	1	SN: 26000-39267
2	01435-01020	BOLT	2	SN: 26000-UP

Catalog signs: ☐ part above may be used instead

Reference: A1050-A0A7

Open this exact parts catalogue on K-Part

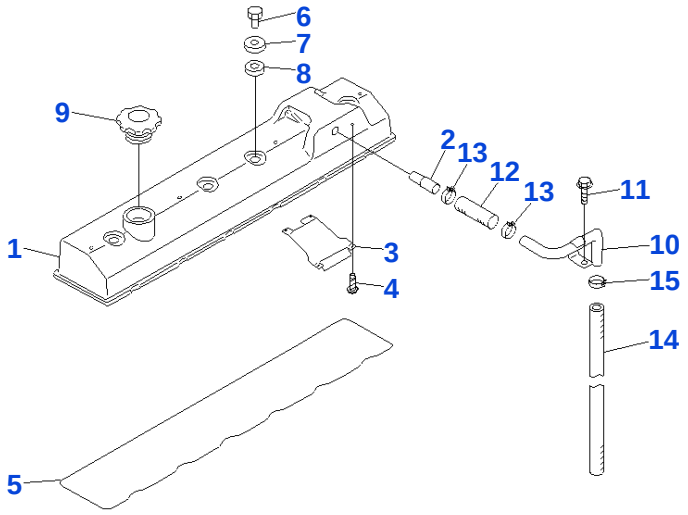

Reference: A1110-A0B3

030040 HEAD COVER

Item	Part No.	Part Name	Qty	Options
	6207-11-8100	HEAD COVER ASSEMBLY	1	SN: 100001-UP
1	6207-11-8110	• COVER, HEAD	1	SN: 100001-UP
2	6207-11-8170	• TUBE	1	SN: 100001-UP
3	6207-11-8140	• PLATE	1	SN: 100001-UP
4	04418-02550	• SCREW	4	SN: 100001-UP
5	6206-11-8810	O RING	1	SN: 100001-UP
6	6136-11-8120	NAT	4	SN: 100001-UP
7	6136-11-8130	WASHER	4	SN: 100001-UP
8	6136-11-8142	PACKING	4	SN: 100001-UP
9	6130-12-8610	CAP	1	SN: 100001-UP
10	6207-11-8910	TUBE, BREATHER	1	SN: 100001-UP
11	01435-21020	BOLT	1	SN: 100001-UP
12	07286-01606	HOSE	1	SN: 100001-UP
13	07285-00180	CLIP	2	SN: 100001-UP
14	07286-01670	HOSE	1	SN: 100001-UP
15	07285-00180	CLIP	1	SN: 100001-UP

Reference: A1110-A0B3

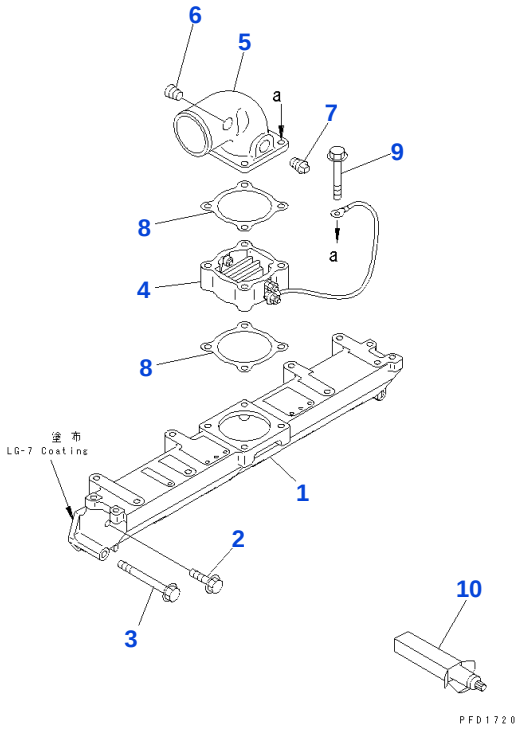

Reference: A131A-A0B6

030050 AIR INTAKE MANIFOLD (WITH RIBBON HEATER)(#26000-39267)

Item	Part No.	Part Name	Qty	Options
1	6206-11-4110	MANIFOLD, AIR INTAKE	1	SN: 26000-39267
2	01435-21030	BOLT	11	SN: 26000-39267
3	01435-21085	BOLT	1	SN: 26000-39267
4	600-815-2341	HEATER, RIBBON	1	SN: 26000-@
5	6206-11-4250	CONNECTOR, AIR	1	SN: 26000-@
6	02720-20204	PLUG	1	SN: 26000-@
7	07042-70415	PLUG	1	SN: 26000-@
8	6136-11-4820	GASKET	2	SN: 26000-@
9	01435-21070	BOLT	4	SN: 26000-@
10	09920-00150	EXHAUST GASKET, LG-7, 150G	-2	SN: 26000-@

Reference: A131A-A0B6

Open this exact parts catalogue on K-Part

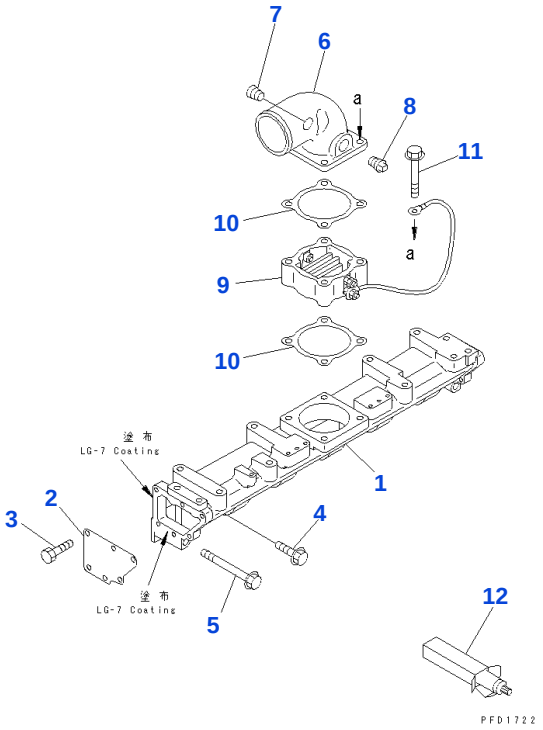

Reference: A1310-A0B6

030060 AIR INTAKE MANIFOLD (WITH RIBBON HEATER)(#39268-)

Item	Part No.	Part Name	Qty	Options
	6206-11-4170	INTAKE MANIFOLD ASSEMBLY	1	SN: 39268-UP
1	6206-11-4140	• MANIFOLD, AIR INTAKE	1	SN: 39268-UP
2	6206-11-4150	• PLATE	2	SN: 39268-UP
3	6206-11-4160	• BOLT	12	SN: 39268-UP
4	01435-21030	BOLT	10	SN: 39268-UP
5	01435-21085	BOLT	2	SN: 39268-UP
6	6206-11-4250	CONNECTOR, AIR	1	SN: 26000-UP
7	02720-20204	PLUG	1	SN: 26000-UP
8	07042-70415	PLUG	1	SN: 26000-UP
9	600-815-2341	HEATER, RIBBON	1	SN: 26000-UP
10	6136-11-4850	GASKET	2	SN: 93158-UP
10	6136-11-4820	☐ GASKET	2	SN: 26000-93157
11	01435-21070	BOLT	4	SN: 26000-UP
12	09920-00150	EXHAUST GASKET, LG-7, 150G	-2	SN: 26000-UP

Catalog signs: ☐ part above may be used instead

Reference: A1310-A0B6

Open this exact parts catalogue on K-Part

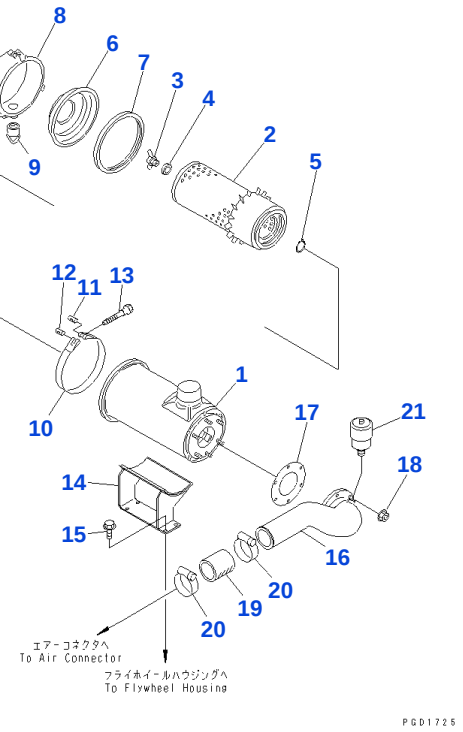

Reference: A1410-A0B4

030070 AIR CLEANER (SINGLE ELEMENT TYPE)

Item	Part No.	Part Name	Qty	Options
	6206-81-1100	AIR CLEANER ASSEMBLY	1	SN: 26000-UP
1	6134-81-7210	• BODY	1	SN: 26000-UP
	600-181-9200	• ELEMENT ASSEMBLY	1	SN: 26000-UP
2		• • ☆ ELEMENT	1	SN: 26000-UP
3	600-181-8640	• • NUT, WING	1	SN: 26000-UP
4	600-181-7511	• • WASHER, SEAL	1	SN: 26000-UP
5	04064-01510	• • RING, SNAP	1	SN: 26000-UP
6	600-181-9551	• DIVIDER	1	SN: 26000-UP
7	600-181-9430	• GASKET	1	SN: 26000-UP
8	600-181-9541	• PAN, DUST	1	SN: 26000-UP
9	600-181-7680	• VALVE	1	SN: 26000-UP
10	6134-11-4610	BAND	1	SN: 26000-UP
11	6110-21-6530	PIN	1	SN: 26000-UP
12	6110-21-6540	PIN, WITH NUT	1	SN: 26000-UP
13	6110-23-6520	BOLT	1	SN: 26000-UP
14	6206-11-4420	BRACKET	1	SN: 26000-UP
15	01435-21020	BOLT	4	SN: 26000-UP
16	6992-13-4210	CONNECTOR	1	SN: 26000-UP
17	6110-11-4431	GASKET	1	SN: 93158-UP
17	6110-11-4430	☐ GASKET	1	SN: 26000-93157
18	01584-00806	NAT	6	SN: 26000-UP
19	6131-11-4611	HOSE	1	SN: 93158-UP
19	6131-11-4610	☐ HOSE	1	SN: 26000-93157
20	07281-00909	CLAMP	2	SN: 26000-UP
21	08670-02001	INDICATOR, DUST	1	SN: 26000-UP

Catalog signs: ☆ not supplied separately: assembly only ☐ part above may be used instead

Reference: A1410-A0B4

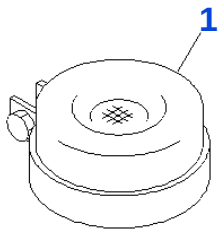

PFD1728

Reference: A1470-A0A3

030080 AIR CLEANER CAP (SCREEN)

Item	Part No.	Part Name	Qty	Options
1	600-181-9960	SCREEN, DUST	1	SN: 26000-UP

Reference: A1470-A0A3

Open this exact parts catalogue on K-Part

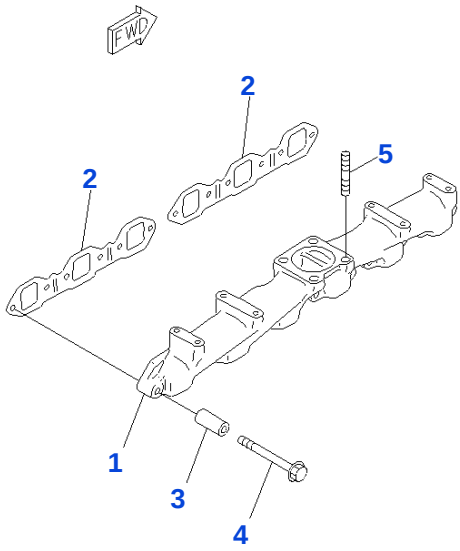

PGD1731

Reference: A1510-A0B7

030090 EXHAUST MANIFOLD

Item	Part No.	Part Name	Qty	Options
1	6206-11-5110	MANIFOLD, EXHAUST	1	SN: 26000-UP
2	6207-11-5810	GASKET	2	SN: 65631-UP
2	6206-11-5811	☐ GASKET	2	SN: 26000-65630
3	6134-11-5120	SPACER	12	SN: 26000-UP
4	01435-01090	BOLT	12	SN: 26000-UP
5	01140-61040	STUD	4	SN: 26000-UP

Catalog signs: ☐ part above may be used instead

Reference: A1510-A0B7

Open this exact parts catalogue on K-Part

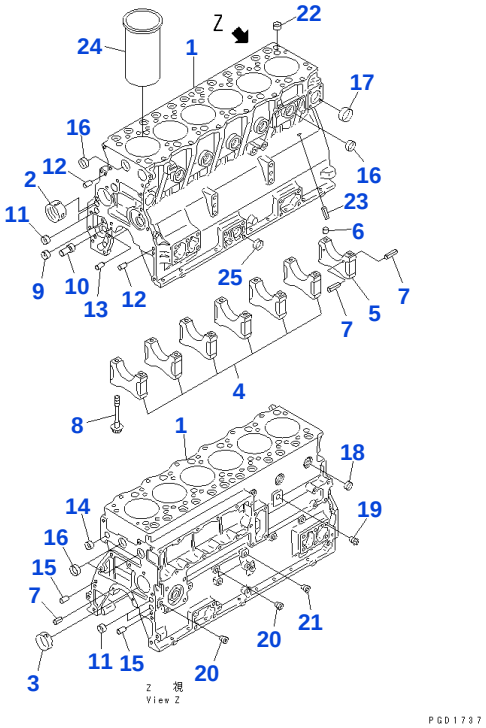

Reference: A2010-A0B6

030100 CYLINDER BLOCK (WITH CYLINDER LINER)

Item	Part No.	Part Name	Qty	Options
	6207-21-1040	CYLINDER BLOCK ASSEMBLY	1	SN: 26000-UP
1		• ☆ BLOCK, CYLINDER	1	SN: 26000-UP
2	6206-21-1430	• BUSHING, CAMSHAFT	1	SN: 116536-UP
2	6204-21-1410	• □ BUSHING, CAMSHAFT	1	SN: 26000-116535
3	6206-21-1420	• BUSHING, CAMSHAFT	3	SN: 26000-UP
4	6204-29-1210	• △ CAP, MAIN METAL, NO.1,2,3,4,5,6	6	SN: 26000-UP
5	6204-29-1220	• △ CAP, MAIN METAL, NO.7	1	SN: 26000-UP
6	6141-21-1530	• RING, DOWEL	2	SN: 26000-UP
7	04025-00408	• PIN, SPRING	6	SN: 26000-UP
8	6204-21-1610	• BOLT, MAIN CAP	14	SN: 26000-UP
9	6204-51-1711	• BUSHING, OIL PUMP	1	SN: 41579-UP
9	6204-51-1710	• □ BUSHING, OIL PUMP	1	SN: 26000-41578
10	6204-51-1620	• SHAFT, OIL PUMP	1	SN: 26000-UP
11	07046-41810	• PLUG	4	SN: 26000-UP
12	04020-00820	• PIN, DOWEL	2	SN: 26000-UP
13	6136-52-1620	• PIN	1	SN: 41579-UP
14	07046-42216	• PLUG	1	SN: 26000-UP
15	04020-01228	• PIN, DOWEL	2	SN: 26000-UP
16	07046-43016	• PLUG	9	SN: 41579-UP
16	07046-43016	• PLUG	7	SN: 26000-41578
17	07046-44016	• PLUG	1	SN: 26000-UP
18	07046-42516	• PLUG	7	SN: 41579-UP
18	07046-42516	• PLUG	6	SN: 26000-41578
19	07042-10312	• PLUG	1	SN: 26000-UP
20	07043-50108	• PLUG	5	SN: 26000-UP
21	07043-50211	• PLUG	1	SN: 26000-UP
22	6140-21-1130	• BUSHING, DOWEL	2	SN: 26000-UP
23	6207-21-1190	• PIN	6	SN: 26000-UP
24	6354-21-2210	• LINER, CYLINDER (MARK A)	-2	SN: 26000-UP
24	6354-21-2220	• LINER, CYLINDER (MARK B)	-2	SN: 26000-UP
25	07046-23016	PLUG	1	SN: 26000-UP

Catalog signs: ☆ not supplied separately: assembly only □ part above may be used instead △ semi-finished: additional work required

Open this exact parts catalogue on K-Part

Get the complete PDF catalogue

Komatsu 6D95L-1G1 (JPN) G-6D95L-1G1-D3 FOR GENERATOR OLYMPIA COGENERATION S/N 26000-UP (JAPANESE)

$89

with PayPal | Store cart: $99

Buy this PDF on Manuals Komatsu

Check the model, serial range and language before payment.

Download instructions are emailed after payment confirmation.

This free sample contains 10 catalogue pages.