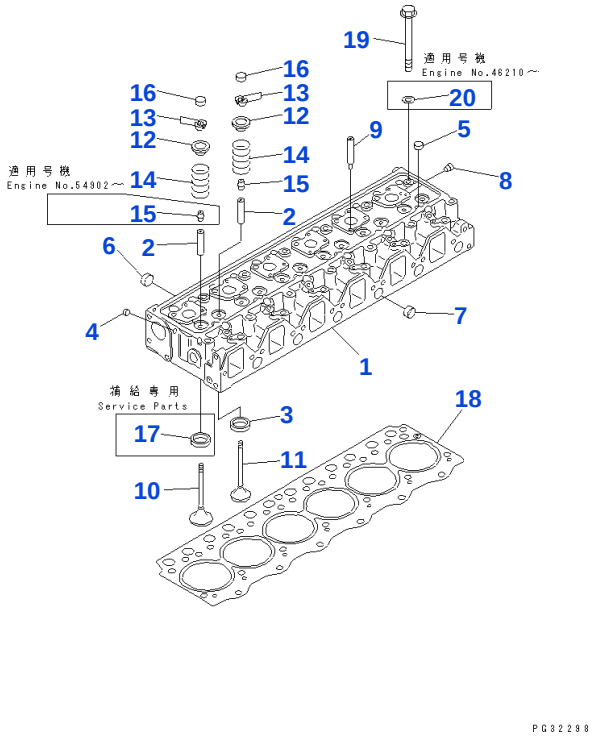

Reference: A1010-A0A9

030010 CYLINDER HEAD

Item	Part No.	Part Name	Qty	Options
	6206-11-1100	CYLINDER HEAD ASSEMBLY, WITHOUT VALVE	1	SN: 26000-UP
1		• ☆ HEAD, CYLINDER	1	SN: 26000-UP
2	6204-19-1310	• △ GUIDE, VALVE	12	SN: 26000-UP
3	6204-11-1440	• SEAT, EXHAUST VALVE (STD)	6	SN: 26000-UP
3	6204-19-1440	• SEAT, 0.25MM, EXHAUST VALVE (OS)	6	SN: 26000-UP
3	6204-18-1440	• SEAT, 0.50MM, EXHAUST VALVE (OS)	6	SN: 26000-UP
4	07046-41008	• PLUG	6	SN: 26000-UP
5	07046-41810	• PLUG	13	SN: 88472-UP
5	07046-41810	• PLUG	7	SN: 26000-88471
6	07046-42216	• PLUG	5	SN: 26000-UP
7	07046-42516	• PLUG	15	SN: 88472-UP
7	07046-42516	• PLUG	16	SN: 26000-88471
8	02720-40104	• PLUG	1	SN: 26000-UP
9	6204-11-8910	• PIPE, BREATHER	3	SN: 26000-UP
10	6207-41-4110	VALVE, INTAKE	6	SN: 46210-UP
10	6204-41-4110	□ VALVE, INTAKE	6	SN: 26000-46209
11	6204-41-4210	VALVE, EXHAUST	6	SN: 26000-UP
12	6204-41-4510	SEAT, SPRING	12	SN: 26000-UP
13	6204-41-4520	COTTER	24	SN: 26000-UP
14	6204-41-4431	SPRING, VALVE	12	SN: 26000-UP
15	6204-41-4540	SEAL, VALVE STEM	12	SN: 54902-UP
15	6204-41-4540	SEAL, VALVE STEM	6	SN: 26000-54901
16	6204-41-4550	CAP	12	SN: 80601-UP
17	6207-11-1430	SEAT, INTAKE VALVE (REPAIR ONLY) (STD)	6	SN: 26000-UP
17	6207-19-1430	SEAT, 0.25MM, INTAKE VALVE (OVERHAUL ONLY) (OS)	6	SN: 26000-UP
17	6207-18-1430	SEAT, 0.50MM, INTAKE VALVE (EXHAUST VALVE ONLY) (OS)	6	SN: 26000-UP
18	6206-11-1830	GASKET, HEAD	1	SN: 93158-UP
18	6206-11-1812	□ GASKET, HEAD	1	SN: 61731-93157
18	6206-11-1811	□ GASKET, HEAD	1	SN: 45796-61730
18	6206-11-1810	□ GASKET, HEAD	1	SN: 26000-45795
19	6204-13-1610	BOLT	25	SN: 46210-UP
19	6142-11-1611	■ BOLT	25	SN: 26000-46209

Open this exact parts catalogue on K-Part

Item	Part No.	Part Name	Qty	Options
		(6204-13-1610,01643-31232)		
20	01643-51232	WASHER	25	SN: 88472-UP
20	01643-31232	☐ WASHER	25	SN: 46210-88471

Catalog signs: ☆ not supplied separately: assembly only △ semi-finished: additional work required ☐ part above may be used instead ■ may be used instead of described part

Reference: A1010-A0A9

Open this exact parts catalogue on K-Part

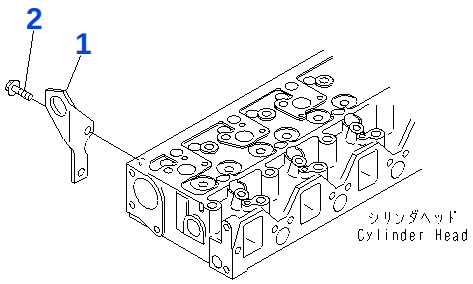

PD38198

Reference: A1030-A0A2

030020 FRONT HANGER

Item	Part No.	Part Name	Qty	Options
1	6206-11-1930	HANGER, FRONT	1	SN: 26000-UP
2	01435-01020	BOLT	2	SN: 26000-UP

Reference: A1030-A0A2

Open this exact parts catalogue on K-Part

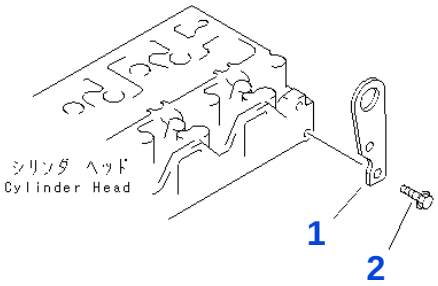

PD38331

Reference: A1050-A0A7

030030 REAR HANGER

Item	Part No.	Part Name	Qty	Options
1	6206-11-1960	HANGER, REAR	1	SN: 39268-UP
1	6206-11-1910	☐ HANGER, REAR	1	SN: 26000-39267
2	01435-01020	BOLT	2	SN: 26000-UP

Catalog signs: ☐ part above may be used instead

Reference: A1050-A0A7

Open this exact parts catalogue on K-Part

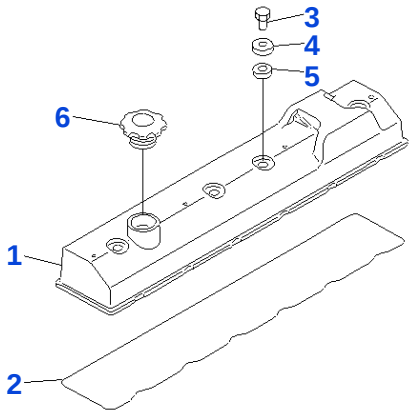

PG32301

Reference: A1110-A0A9

030040 HEAD COVER

Item	Part No.	Part Name	Qty	Options
1	6206-11-8510	COVER, HEAD	1	SN: 67567-UP
1	6206-11-8110	◆ COVER, HEAD	1	SN: 26000-67566
2	6206-11-8810	O RING	1	SN: 26000-UP
3	6136-11-8120	NAT	4	SN: 26000-UP
4	6136-11-8130	WASHER	4	SN: 26000-UP
5	6136-11-8142	PACKING	4	SN: 26000-UP
6	6130-12-8610	CAP, OIL FILLER	1	SN: 26000-UP

Catalog signs: ◆ interchangeable with part above

Reference: A1110-A0A9

Open this exact parts catalogue on K-Part

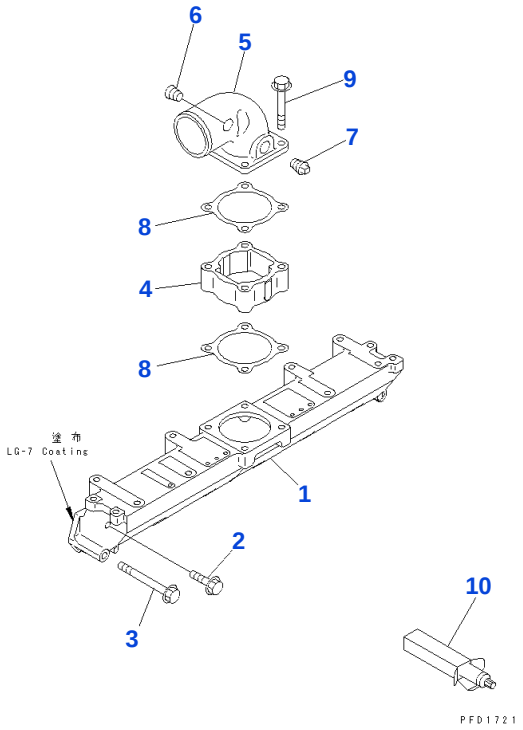

Reference: A131A-A0C6

030050 AIR INTAKE MANIFOLD(#26000-39267)

Item	Part No.	Part Name	Qty	Options
1	6206-11-4110	MANIFOLD, AIR INTAKE	1	SN: 26000-39267
2	01435-21030	BOLT	11	SN: 26000-39267
3	01435-21085	BOLT	1	SN: 26000-39267
4	6207-81-5210	SPACER	1	SN: 26000-@
5	6206-11-4250	CONNECTOR, AIR	1	SN: 26000-@
6	02720-20204	PLUG	1	SN: 26000-@
7	07042-70415	PLUG	1	SN: 26000-@
8	6136-11-4820	GASKET	2	SN: 26000-@
9	01435-21070	BOLT	4	SN: 26000-@
10	09920-00150	EXHAUST GASKET, LG-7, 150G	-2	SN: 26000-@

Reference: A131A-A0C6

Open this exact parts catalogue on K-Part

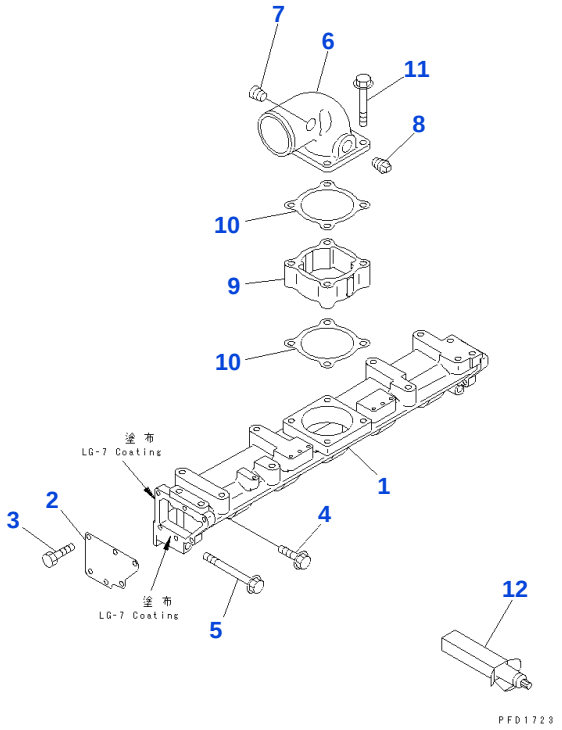

Reference: A1310-A0C6

030060 AIR INTAKE MANIFOLD (#39268-)

Item	Part No.	Part Name	Qty	Options
	6206-11-4170	INTAKE MANIFOLD ASSEMBLY	1	SN: 39268-UP
1	6206-11-4140	• MANIFOLD, AIR INTAKE	1	SN: 39268-UP
2	6206-11-4150	• PLATE	2	SN: 39268-UP
3	6206-11-4160	• BOLT	12	SN: 39268-UP
4	01435-21030	BOLT	10	SN: 39268-UP
5	01435-21085	BOLT	2	SN: 39268-UP
6	6206-11-4250	CONNECTOR, AIR	1	SN: 26000-UP
7	02720-20204	PLUG	1	SN: 26000-UP
8	07042-70415	PLUG	1	SN: 26000-UP
9	6207-81-5210	SPACER	1	SN: 26000-UP
10	6136-11-4850	GASKET	2	SN: 93158-UP
10	6136-11-4820	☐ GASKET	2	SN: 26000-93157
11	01435-21070	BOLT	4	SN: 26000-UP
12	09920-00150	EXHAUST GASKET, LG-7, 150G	-2	SN: 26000-UP

Catalog signs: ☐ part above may be used instead

Reference: A1310-A0C6

Open this exact parts catalogue on K-Part

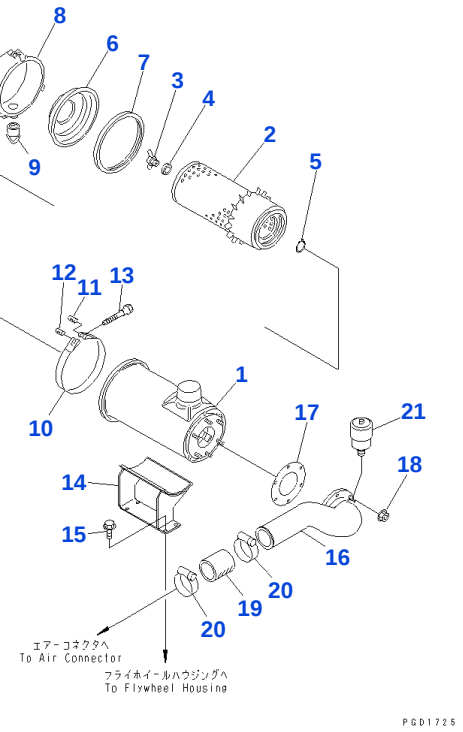

Reference: A1410-A0B4

030070 AIR CLEANER (SINGLE ELEMENT TYPE)

Item	Part No.	Part Name	Qty	Options
	6206-81-1100	AIR CLEANER ASSEMBLY	1	SN: 26000-UP
1	6134-81-7210	• BODY	1	SN: 26000-UP
	600-181-9200	• ELEMENT ASSEMBLY	1	SN: 26000-UP
2		• • ☆ ELEMENT	1	SN: 26000-UP
3	600-181-8640	• • NUT, WING	1	SN: 26000-UP
4	600-181-7511	• • WASHER, SEAL	1	SN: 26000-UP
5	04064-01510	• • RING, SNAP	1	SN: 26000-UP
6	600-181-9551	• DIVIDER	1	SN: 26000-UP
7	600-181-9430	• GASKET	1	SN: 26000-UP
8	600-181-9541	• PAN, DUST	1	SN: 26000-UP
9	600-181-7680	• VALVE	1	SN: 26000-UP
10	6134-11-4610	BAND	1	SN: 26000-UP
11	6110-21-6530	PIN	1	SN: 26000-UP
12	6110-21-6540	PIN, WITH NUT	1	SN: 26000-UP
13	6110-23-6520	BOLT	1	SN: 26000-UP
14	6206-11-4420	BRACKET	1	SN: 26000-UP
15	01435-21020	BOLT	4	SN: 26000-UP
16	6992-13-4210	CONNECTOR	1	SN: 26000-UP
17	6110-11-4431	GASKET	1	SN: 93158-UP
17	6110-11-4430	☐ GASKET	1	SN: 26000-93157
18	01584-00806	NAT	6	SN: 26000-UP
19	6131-11-4611	HOSE	1	SN: 93158-UP
19	6131-11-4610	☐ HOSE	1	SN: 26000-93157
20	07281-00909	CLAMP	2	SN: 26000-UP
21	08670-02001	INDICATOR, DUST	1	SN: 26000-UP

Catalog signs: ☆ not supplied separately: assembly only ☐ part above may be used instead

Reference: A1410-A0B4

Open this exact parts catalogue on K-Part

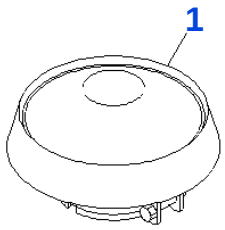

PFD1727

Reference: A1470-A0A2

030080 AIR CLEANER CAP (RAIN CAP)

Item	Part No.	Part Name	Qty	Options
1	600-181-3840	CAP, RAIN	1	SN: 26000-UP

Reference: A1470-A0A2

Open this exact parts catalogue on K-Part

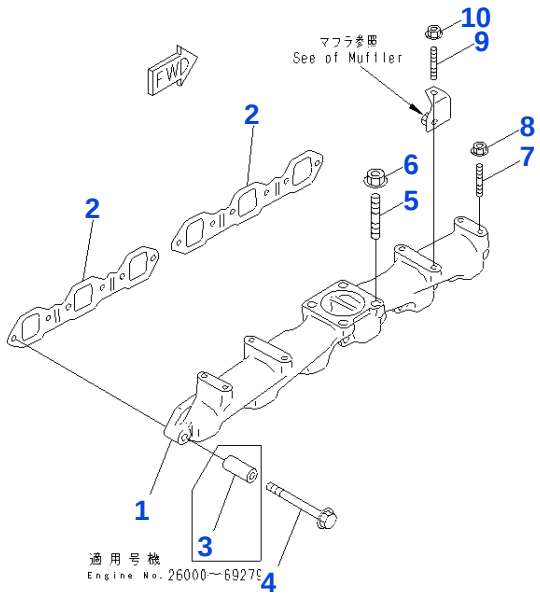

PGD1732

Reference: A1510-A0B8

030090 EXHAUST MANIFOLD

Item	Part No.	Part Name	Qty	Options
1	6206-11-5110	MANIFOLD, EXHAUST	1	SN: 26000-UP
2	6207-11-5810	GASKET	2	SN: 65631-UP
2	6206-11-5811	☐ GASKET	2	SN: 26000-65630
3	6134-11-5120	SPACER	12	SN: 26000-69279
4	01435-01045	BOLT	12	SN: 69280-UP
4	01435-01090	BOLT	12	SN: 26000-69279
5	01140-61025	STUD	4	SN: 26000-UP
6	6142-12-5850	NAT	4	SN: 26000-UP
7	01140-61025	STUD	2	SN: 69280-UP
7	01140-61030	STUD	2	SN: 26000-69279
8	6142-12-5850	NAT	2	SN: 26000-UP
9	01140-61025	STUD	1	SN: 69280-UP
9	01140-61030	STUD	1	SN: 26000-69279
10	6142-12-5850	NAT	1	SN: 26000-UP

Catalog signs: ☐ part above may be used instead

Reference: A1510-A0B8

Open this exact parts catalogue on K-Part

Get the complete PDF catalogue

Komatsu 6D95L-1GD (JPN) G-6D95L-1GD-D5 FOR GENERATOR DENYO DCA70AKT S/N 26000-UP (JAPANESE)

$89

with PayPal | Store cart: $99

Buy this PDF on Manuals Komatsu

Check the model, serial range and language before payment.

Download instructions are emailed after payment confirmation.

This free sample contains 10 catalogue pages.