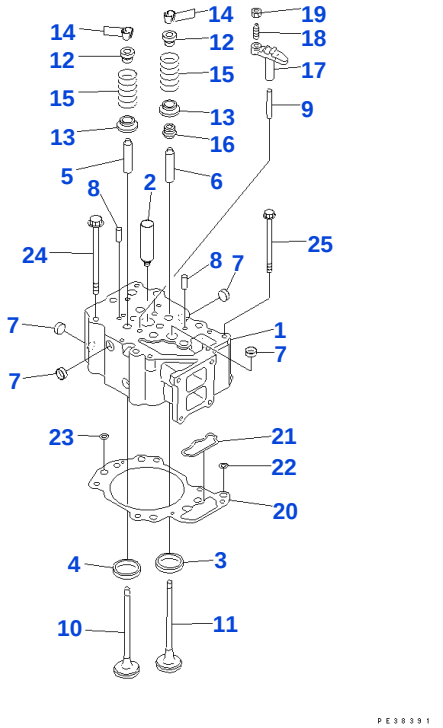

Reference: A1010-A3A7

030010 CYLINDER HEAD

Item	Part No.	Part Name	Qty	Options
	6150-11-1101	CYLINDER HEAD ASSEMBLY, WITHOUT VALVE	6	SN: 27124-UP
	6150-11-1100	◆ CYLINDER HEAD ASSEMBLY, WITHOUT VALVE	6	SN: 21000-27123
1		• ☆ HEAD, CYLINDER	1	SN: 21000-UP
2	6136-11-1130	• SLEEVE	1	SN: 21000-UP
3	6150-11-1320	• INSERT, EXHAUST VALVE (STD)	2	SN: 21000-UP
3	6150-19-1320	• INSERT, 0.25MM, EXHAUST VALVE (OS)	2	SN: 21000-UP
3	6150-18-1320	• INSERT, 0.50MM, EXHAUST VALVE (OS)	2	SN: 21000-UP
3	6150-17-1320	• INSERT, 0.75MM, EXHAUST VALVE (OS)	2	SN: 21000-UP
3	6150-16-1320	• INSERT, 1.00MM, EXHAUST VALVE (OS)	2	SN: 21000-UP
4	6150-11-1331	• INSERT, INTAKE VALVE (STD)	2	SN: 21000-UP
4	6150-19-1331	• INSERT, 0.25MM, INTAKE VALVE (OS)	2	SN: 21000-UP
4	6150-18-1331	• INSERT, 0.50MM, INTAKE VALVE (OS)	2	SN: 21000-UP
4	6150-17-1331	• INSERT, 0.75MM, INTAKE VALVE (OS)	2	SN: 21000-UP
4	6150-16-1331	• INSERT, 1.00MM, INTAKE VALVE (OS)	2	SN: 21000-UP
5	6150-12-1341	• GUIDE, INTAKE VALVE	2	SN: 21000-UP
6	6150-12-1341	• GUIDE, EXHAUST VALVE	2	SN: 27124-UP
6	6150-12-1351	• GUIDE, EXHAUST VALVE	2	SN: 21000-27123
7	6162-13-1150	• PLUG, EXPANSION	8	SN: 21000-UP
8	04020-00820	• PIN, DOWEL	2	SN: 21000-UP
9	6150-11-1140	• GUIDE	2	SN: 21000-UP
10	6150-41-4111	VALVE, INTAKE	12	SN: 22965-UP
10	6150-41-4120	◆ VALVE, INTAKE	12	SN: 21000-22964
11	6150-41-4210	VALVE, EXHAUST	12	SN: 21000-UP
12	6150-41-4510	SEAT, UPPER	24	SN: 21000-UP
13	6150-41-4430	SEAT, LOWER	24	SN: 21000-UP
14	6136-42-4520	COTTER, VALVE	48	SN: 21000-UP
15	6150-41-4411	SPRING, VALVE	24	SN: 21000-UP
16	6150-41-4570	SEAL, EXHAUST VALVE	12	SN: 27124-UP
16	6140-41-4540	SEAL, EXHAUST VALVE	12	SN: 21000-27123
17	6150-41-5611	CROSSHEAD	12	SN: 21000-UP
18	6150-41-5620	SCREW	12	SN: 21000-UP
19	6150-41-5630	NAT	12	SN: 21000-UP
20	6150-17-1813	GASKET	6	SN: 27124-UP

Open this exact parts catalogue on K-Part

Item	Part No.	Part Name	Qty	Options
20	6150-17-1812	◆ GASKET	6	SN: 21000-27123
21	6150-11-1920	• GROMMET, OIL	1	SN: 21000-UP
22	6150-11-1930	• GROMMET, OIL	1	SN: 21000-UP
23		• ☆ GROMMET, WATER	4	SN: 27124-UP
23		• ☆ GROMMET, WATER	4	SN: 21000-27123
24	6150-11-1610	BOLT	36	SN: 21000-UP
25	6150-81-9160	BOLT	6	SN: 21000-UP

Catalog signs: ◆ interchangeable with part above ☆ not supplied separately: assembly only

Reference: A1010-A3A7

Open this exact parts catalogue on K-Part

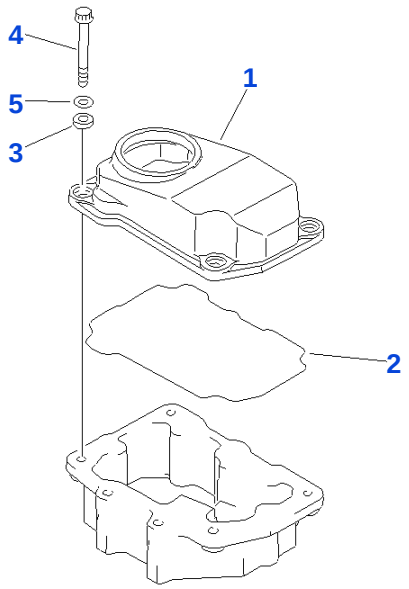

PE38392

Reference: A1110-A3A1

030020 HEAD COVER

Item	Part No.	Part Name	Qty	Options
1	6150-11-8111	COVER, HEAD	6	SN: 21000-UP
2	6150-11-8810	GASKET	6	SN: 21000-UP
3	6150-11-8820	RUBBER	24	SN: 21000-UP
4	6150-81-9370	BOLT	24	SN: 21000-UP
5	01640-21016	WASHER	24	SN: 21000-UP

Reference: A1110-A3A1

Open this exact parts catalogue on K-Part

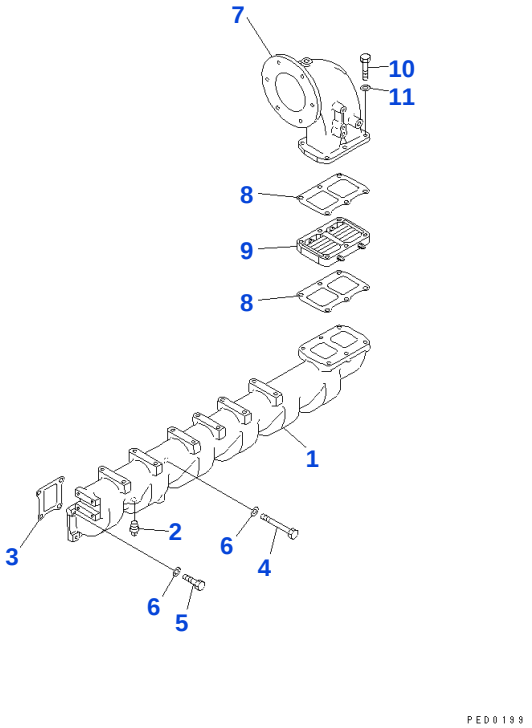

Reference: A1310-A3D2

030030 AIR INTAKE

Item	Part No.	Part Name	Qty	Options
	6150-11-4910	INTAKE MANIFOLD ASSEMBLY	1	SN: 21000-UP
1		• ☆ MANIFOLD, AIR INTAKE	1	SN: 21000-UP
2	07042-00415	• PLUG	1	SN: 21000-UP
3	6150-13-4810	GASKET	6	SN: 27124-UP
3	6150-11-4810	□ GASKET	6	SN: 21000-27123
4	01011-51010	BOLT	8	SN: 21000-UP
5	01010-51030	BOLT	16	SN: 21000-UP
6	01640-21016	WASHER	24	SN: 21000-UP
7	6150-11-4210	CONNECTOR	1	SN: 21000-UP
8	6150-11-4821	GASKET	2	SN: 27124-UP
8	6150-11-4820	□ GASKET	2	SN: 21000-27123
9	600-815-3811	HEATER, RIBBON	1	SN: 27124-UP
9	600-815-3810	◆ HEATER, RIBBON	1	SN: 21000-27123
10	01010-51055	BOLT	6	SN: 21000-UP
11	01640-21016	WASHER	6	SN: 21000-UP

Catalog signs: ☆ not supplied separately: assembly only □ part above may be used instead ◆ interchangeable with part above

Reference: A1310-A3D2

Open this exact parts catalogue on K-Part

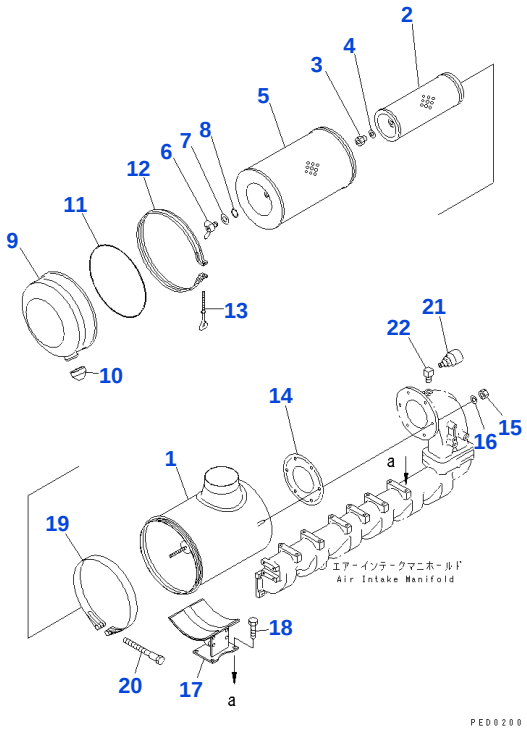

Reference: A1410-A3F1

030040 AIR CLEANER

Item	Part No.	Part Name	Qty	Options
	6631-81-7603	AIR CLEANER ASSEMBLY	1	SN: 21000-UP
1	6631-81-7610	• BODY	1	SN: 21000-UP
	600-182-2500	• ELEMENT ASSEMBLY	1	SN: 27124-UP
	6115-81-7602	• ◆ ELEMENT ASSEMBLY	1	SN: 21000-27123
2		• • ☆ ELEMENT, INNER	1	SN: 21000-UP
3	600-181-7910	• • NAT	1	SN: 21000-UP
4	600-181-7511	• • WASHER, SEAL	1	SN: 21000-UP
	600-182-2510	• • ELEMENT ASSEMBLY, OUTER	1	SN: 27124-UP
	600-181-2300	• • ◆ ELEMENT ASSEMBLY, OUTER	1	SN: 21000-27123
5		• • • ☆ ELEMENT, OUTER	1	SN: 27124-UP
5		• • • ☆ ELEMENT, OUTER	1	SN: 21000-27123
6	600-181-2990	• • • NUT, WING	1	SN: 21000-UP
7	600-181-4591	• • • WASHER, SEAL	1	SN: 21000-UP
8	04064-01510	• • • RING, SNAP	1	SN: 21000-UP
9	600-181-3280	• PAN	1	SN: 21000-UP
10	600-181-2550	• VALVE	1	SN: 21000-UP
11	6692-81-7130	• O RING	1	SN: 21000-UP
12	600-181-3260	• BAND	1	SN: 21000-UP
13	6692-81-7180	• BOLT	1	SN: 21000-UP
14	6136-11-4841	GASKET	1	SN: 27124-UP
14	6136-11-4840	◆ GASKET	1	SN: 22968-27123
14	6631-11-4381	□ GASKET	1	SN: 21000-22967
15	01582-11008	NAT	6	SN: 21000-UP
16	01640-21016	WASHER	6	SN: 21000-UP
17	6150-11-4510	BRACKET	1	SN: 21000-UP
18	01010-51025	BOLT	4	SN: 21000-UP
19	6691-11-4610	BAND ASSEMBLY	1	SN: 21000-UP
19	6110-11-4520	• PIN	1	SN: 21000-UP
19	6110-11-4530	• PIN, WITH THREAD	1	SN: 21000-UP
20	6643-11-4641	BOLT	1	SN: 21000-UP
21	08670-02001	INDICATOR, DUST	1	SN: 21000-UP
22	6693-62-1930	ERBO	1	SN: 21000-UP

Catalog signs: ◆ interchangeable with part above ☆ not supplied separately: assembly only □ part above may be used instead

Open this exact parts catalogue on K-Part

Open this exact parts catalogue on K-Part

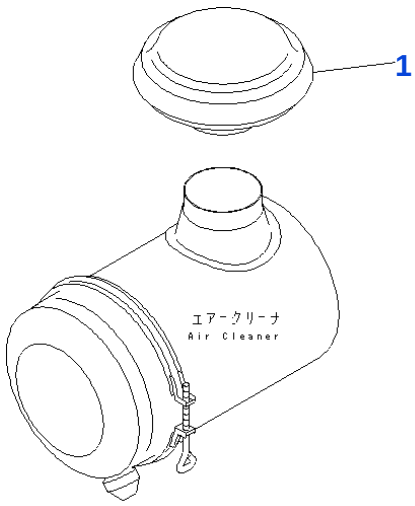

Reference: A1470-A3C7

030050 AIR CLEANER CAP

Item	Part No.	Part Name	Qty	Options
1	600-181-3860	CAP, AIR CLEANER	1	SN: 21000-UP

Reference: A1470-A3C7

Open this exact parts catalogue on K-Part

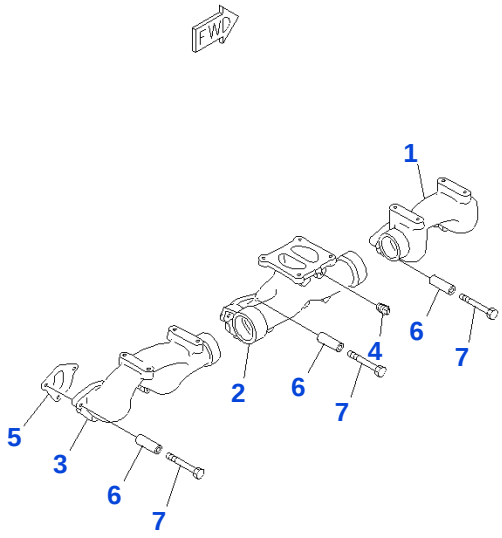

Reference: A1510-A3A1

030060 EXHAUST MANIFOLD

Item	Part No.	Part Name	Qty	Options
1	6151-11-5110	MANIFOLD, EXHAUST, FRONT	1	SN: 21000-UP
2	6150-11-5140	MANIFOLD, EXHAUST, CENTER	1	SN: 21000-UP
3	6151-11-5130	MANIFOLD, EXHAUST, REAR	1	SN: 21000-UP
4	07042-00108	PLUG	1	SN: 21000-UP
5	6150-11-5810	GASKET (K1)	6	SN: 21000-UP
6	6134-11-5120	SPACER	18	SN: 21000-UP
7	01010-31080	BOLT	18	SN: 21000-UP

Reference: A1510-A3A1

Open this exact parts catalogue on K-Part

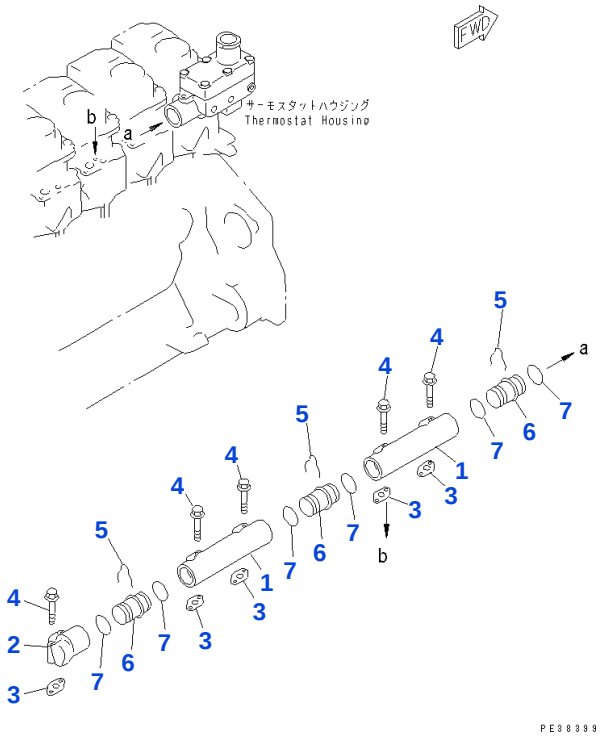

Reference: A1710-A3A1

030070 WATER MANIFOLD

Item	Part No.	Part Name	Qty	Options
1	6150-11-6111	MANIFOLD, WATER	2	SN: 21000-UP
2	6150-11-6120	MANIFOLD, WATER	1	SN: 21000-UP
3	6150-11-6311	GASKET	5	SN: 21000-UP
3	6150-11-6310	□ GASKET	5	SN: 21000-UP
4	01437-01065	BOLT	10	SN: 27124-UP
4	6150-81-9190	◆ BOLT	10	SN: 21000-27123
5	6150-11-6280	SPRING	3	SN: 21000-UP
6	6150-11-6210	TUBE	3	SN: 21000-UP
7	02893-05043	O RING	6	SN: 21000-UP

Catalog signs: □ part above may be used instead ◆ interchangeable with part above

Reference: A1710-A3A1

Open this exact parts catalogue on K-Part

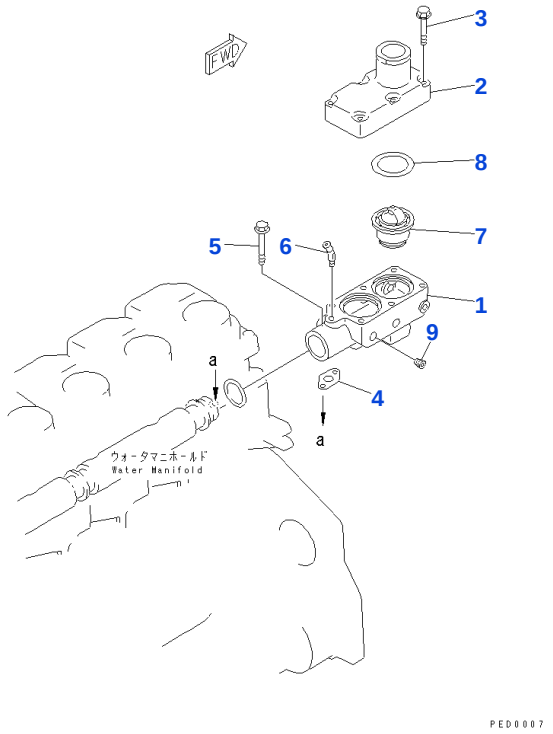

Reference: A1730-A3C5

030080 THERMOSTAT HOUSING

Item	Part No.	Part Name	Qty	Options
1	6150-11-6410	HOUSING, THERMOSTAT	1	SN: 21000-UP
2	6150-11-6510	COVER	1	SN: 21000-UP
3	01437-01050	BOLT	6	SN: 27124-UP
3	6150-81-9180	◆ BOLT	6	SN: 21000-27123
4	6150-11-6311	GASKET	1	SN: 27124-UP
4	6150-11-6310	□ GASKET	1	SN: 21000-27123
5	01437-01065	BOLT	2	SN: 27124-UP
5	6150-81-9190	◆ BOLT	2	SN: 21000-27123
6	6136-61-8640	NIPPLE	1	SN: 21000-UP
7	600-421-6320	THERMOSTAT	2	SN: 21000-UP
8	6138-11-6810	GASKET	2	SN: 21000-UP
9	07043-00108	PLUG	1	SN: 21000-UP

Catalog signs: ◆ interchangeable with part above □ part above may be used instead

Reference: A1730-A3C5

Open this exact parts catalogue on K-Part

Get the complete PDF catalogue

Komatsu 6D125-1GD (JPN) G-6D125-1GD-D1 FOR GENERATOR DIG100SSK S/N 21000-UP (JAPANESE)

$89

with PayPal | Store cart: $99

Buy this PDF on Manuals Komatsu

Check the model, serial range and language before payment.

Download instructions are emailed after payment confirmation.

This free sample contains 10 catalogue pages.