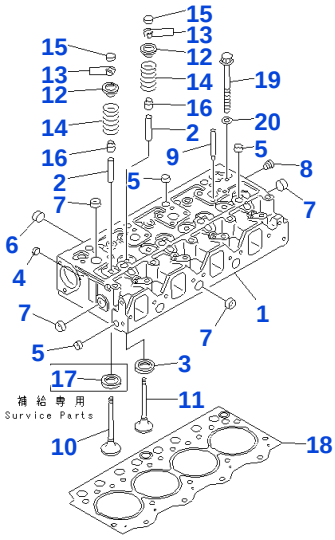

PE39865

Reference: A1010-A0A8

030010 CYLINDER HEAD

Item	Part No.	Part Name	Qty	Options
	6204-11-1100	CYLINDER HEAD ASSEMBLY, WITHOUT VALVE	1	SN: 10001-UP
1		• ☆ HEAD, CYLINDER	1	SN: 10001-UP
2	6204-19-1310	• GUIDE, VALVE	8	SN: 10001-UP
3	6204-11-1440	• SEAT,EXHAUST VALVE (STD)	4	SN: 10001-UP
3	6204-19-1440	• SEAT, 0.25MM, EXHAUST VALVE (OS)	4	SN: 10001-UP
3	6204-18-1440	• SEAT, 0.50MM, EXHAUST VALVE (OS)	4	SN: 10001-UP
4	07046-41008	• PLUG	4	SN: 10001-UP
5	07046-41810	• PLUG	9	SN: 10001-UP
6	07046-42216	• PLUG	3	SN: 10001-UP
7	07046-42516	• PLUG	11	SN: 10001-UP
8	02720-40104	• PLUG	1	SN: 10001-UP
9	6204-11-8910	• PIPE, BREATHER	2	SN: 10001-UP
10	6207-41-4110	VALVE, INTAKE	4	SN: 10001-UP
11	6204-41-4210	VALVE, EXHAUST	4	SN: 10001-UP
12	6204-41-4510	SEAT	8	SN: 10001-UP
13	6204-41-4520	COTTER	16	SN: 10001-UP
14	6204-41-4431	SPRING, VALVE	8	SN: 10001-UP
15	6204-41-4550	CAP	8	SN: 10001-UP
16	6204-41-4540	SEAL,VALVE	8	SN: 10001-UP
17	6207-11-1430	SEAT, INTAKE VALVE (REPAIR ONLY) (STD)	4	SN: 10001-UP
17	6207-19-1430	SEAT, 0.25MM, INTAKE VALVE (SUPPLY ONLY) (OS)	4	SN: 10001-UP
17	6207-18-1430	SEAT, 0.50MM, INTAKE VALVE (EXHAUST VALVE ONLY) (OS)	4	SN: 10001-UP
18	6205-11-1813	GASKET, HEAD	1	SN: 29462-UP
18	6204-11-1812	☐ GASKET, HEAD	1	SN: 10001-29461
19	6204-13-1610	BOLT	17	SN: 10001-UP
20	01643-51232	WASHER	17	SN: 10001-UP

Catalog signs: ☆ not supplied separately: assembly only ☐ part above may be used instead

Reference: A1010-A0A8

Open this exact parts catalogue on K-Part

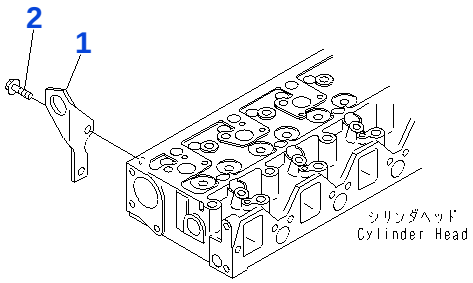

PD38198

Reference: A1030-A0A2

030020 FRONT HANGER

Item	Part No.	Part Name	Qty	Options
1	6206-11-1930	HANGER, FRONT	1	SN: 10001-UP
2	01435-01020	BOLT	2	SN: 10001-UP

Reference: A1030-A0A2

Open this exact parts catalogue on K-Part

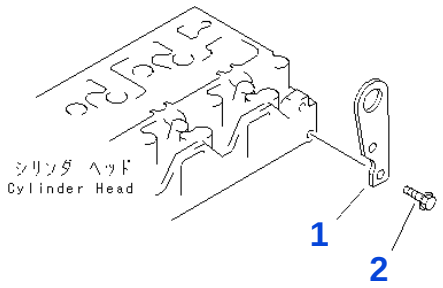

PD38331

Reference: A1050-A0A6

030030 REAR HANGER

Item	Part No.	Part Name	Qty	Options
1	6206-11-1910	HANGER, REAR	1	SN: 10001-UP
2	01435-01020	BOLT	2	SN: 10001-UP

Reference: A1050-A0A6

Open this exact parts catalogue on K-Part

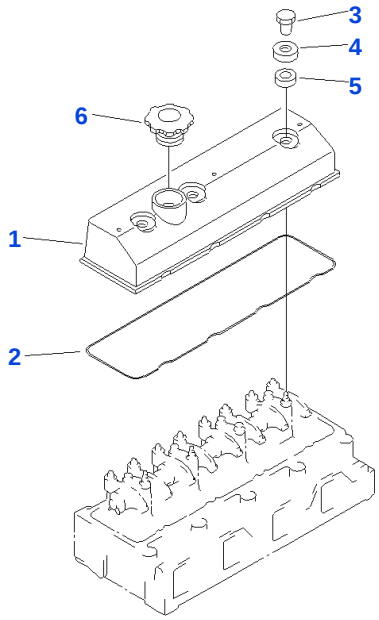

Reference: A1110-A0A8

030040 HEAD COVER

Item	Part No.	Part Name	Qty	Options
1	6204-11-8110	COVER, HEAD	1	SN: 10001-UP
2	6204-11-8810	O RING	1	SN: 10001-UP
3	6136-11-8120	NAT	3	SN: 10001-UP
4	6136-11-8130	WASHER	3	SN: 10001-UP
5	6136-11-8142	PACKING	3	SN: 10001-UP
6	6130-12-8610	CAP	1	SN: 10001-UP

Reference: A1110-A0A8

Open this exact parts catalogue on K-Part

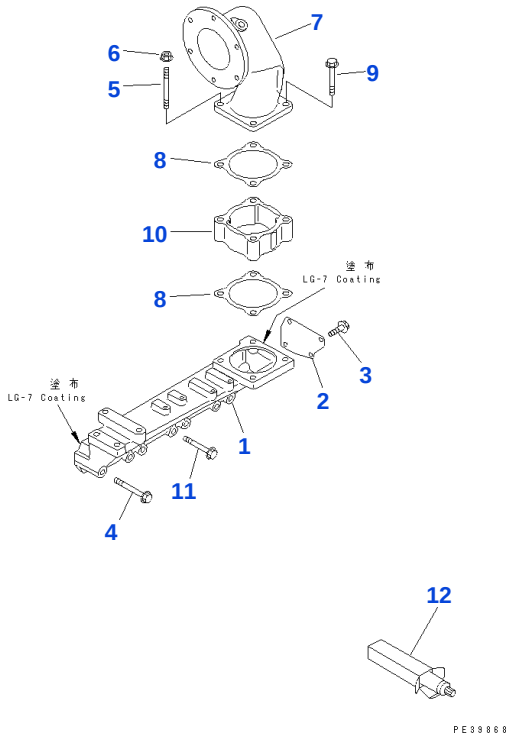

Reference: A1310-A0B8

030050 AIR INTAKE

Item	Part No.	Part Name	Qty	Options
1	6204-11-4131	MANIFOLD, AIR INTAKE	1	SN: 29462-UP
1	6204-11-4130	■ MANIFOLD, AIR INTAKE (6204-11-4131,01435-21065(2))	1	SN: 10001-29461
2	6204-11-4140	PLATE	1	SN: 10001-UP
3	01435-00812	BOLT	4	SN: 10001-UP
4	01435-21075	BOLT	6	SN: 10001-UP
5	01144-31065	STUD	2	SN: 10001-UP
6	01584-01008	NAT	2	SN: 10001-UP
7	6204-11-4260	CONNECTOR,AIR	1	SN: 10001-UP
8	6136-11-4850	GASKET	2	SN: 29462-UP
8	6136-11-4820	□ GASKET	2	SN: 10001-29461
9	01435-21065	BOLT	2	SN: 10001-UP
10	6207-81-5210	SPACER	1	SN: 10001-UP
11	01435-21065	BOLT	2	SN: 29462-UP
11	01435-21075	BOLT	2	SN: 10001-29461
12	09920-00150	EXHAUST GASKET, LG-7, 150G	-2	SN: 10001-UP

Catalog signs: ■ may be used instead of described part □ part above may be used instead

Reference: A1310-A0B8

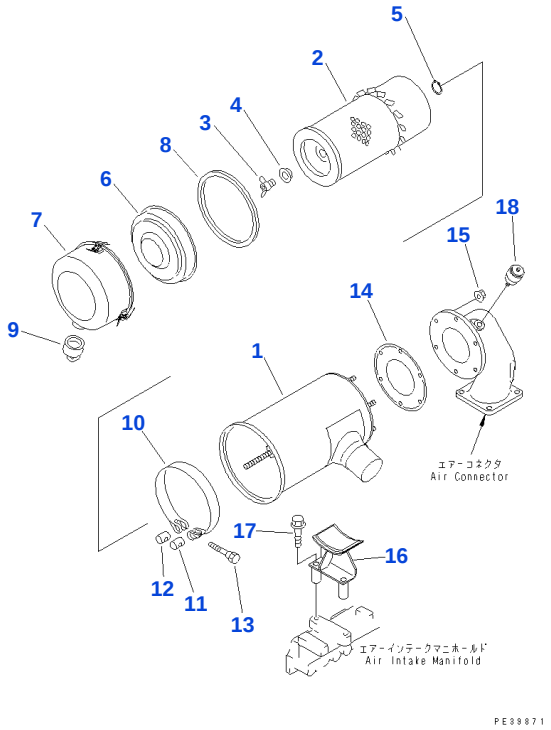

Reference: A1410-A0B3

030060 AIR CLEANER

Item	Part No.	Part Name	Qty	Options
	6204-81-7100	AIR CLEANER ASSEMBLY	1	SN: 10001-UP
1	6144-81-7710	• BODY	1	SN: 10001-UP
	600-181-7300	• ELEMENT ASSEMBLY	1	SN: 10001-UP
2		• • ☆ ELEMENT	1	SN: 10001-UP
3	600-181-7920	• • NUT, WING	1	SN: 10001-UP
4	600-181-7511	• • WASHER, SEAL	1	SN: 10001-UP
5	04064-01510	• • RING, SNAP	1	SN: 10001-UP
6	600-181-7480	• DIVIDER	1	SN: 10001-UP
7	600-181-7540	• PAN, DUST	1	SN: 10001-UP
8	600-181-7460	• GASKET	1	SN: 10001-UP
9	600-181-7680	• VALVE	1	SN: 10001-UP
10	6144-11-4540	BAND	1	SN: 10001-UP
11	6110-21-6530	PIN	1	SN: 10001-UP
12	6110-21-6540	PIN, WITH NUT	1	SN: 10001-UP
13	6110-23-6520	BOLT	1	SN: 10001-UP
14	6110-11-4431	GASKET	1	SN: 29462-UP
14	6110-11-4430	□ GASKET	1	SN: 10001-29461
15	01584-20806	NAT	6	SN: 10001-UP
16	6204-11-4620	BRACKET	1	SN: 10001-UP
17	01435-21060	BOLT	2	SN: 10001-UP
18	08670-02001	INDICATOR, DUST	1	SN: 10001-UP

Catalog signs: ☆ not supplied separately: assembly only □ part above may be used instead

Reference: A1410-A0B3

Open this exact parts catalogue on K-Part

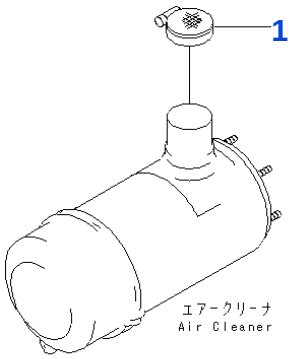

PE33874

Reference: A1470-A0A1

030070 AIR CLEANER CAP

Item	Part No.	Part Name	Qty	Options
1	6202-81-7720	CAP, AIR CLEANER	1	SN: 10001-UP

Reference: A1470-A0A1

Open this exact parts catalogue on K-Part

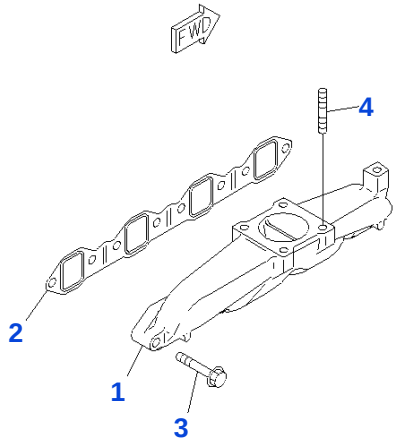

PD39876

Reference: A1510-A0A7

030080 EXHAUST MANIFOLD

Item	Part No.	Part Name	Qty	Options
1	6204-11-5110	MANIFOLD, EXHAUST	1	SN: 10001-UP
2	6205-11-5810	GASKET	1	SN: 10001-UP
3	01435-01045	BOLT	8	SN: 10001-UP
4	01140-61025	STUD	4	SN: 10001-UP

Reference: A1510-A0A7

Open this exact parts catalogue on K-Part

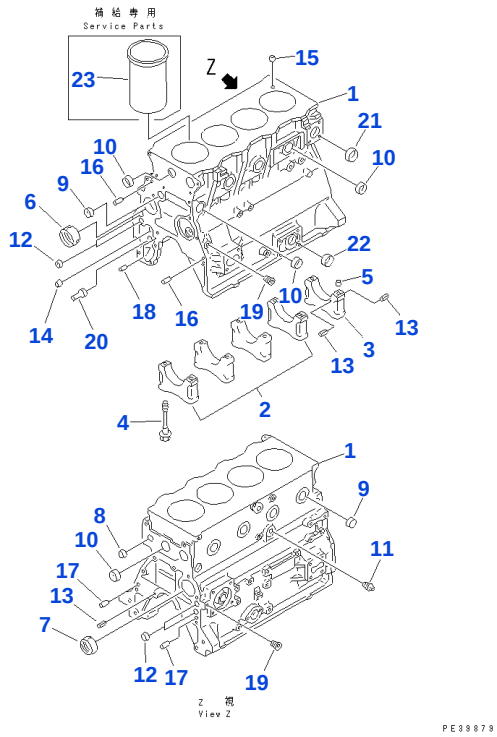

Reference: A2010-A0A8

030090 CYLINDER BLOCK

Item	Part No.	Part Name	Qty	Options
	6204-21-1102	CYLINDER BLOCK ASSEMBLY	1	SN: 10001-UP
1		• ☆ BLOCK, CYLINDER	1	SN: 10001-UP
2	6204-29-1210	• △ CAP, MAIN METAL, NO.1,2,3,4	4	SN: 10001-UP
3	6204-29-1220	• △ CAP, MAIN METAL, NO.5	1	SN: 10001-UP
4	6204-21-1610	• BOLT, MAIN CAP	10	SN: 10001-UP
5	6141-21-1530	• RING, DOWEL	2	SN: 10001-UP
6	6206-21-1430	• BUSHING, CAMSHAFT	1	SN: .-UP
6	6204-21-1410	• BUSHING, CAMSHAFT	1	SN: 10001-.
7	6206-21-1420	• BUSHING, CAMSHAFT	2	SN: 10001-UP
8	07046-42216	• PLUG	1	SN: 10001-UP
9	07046-42516	• PLUG	5	SN: 10001-UP
10	07046-43016	• PLUG	7	SN: 10001-UP
11	07042-10312	• PLUG	1	SN: 10001-UP
12	07046-41810	• PLUG	4	SN: 10001-UP
13	04025-00408	• PIN, SPRING	6	SN: 10001-UP
14	6204-51-1711	• BUSHING, OIL PUMP	1	SN: 10001-UP
15	6140-21-1130	• BUSHING, DOWEL	2	SN: 10001-UP
16	04020-00820	• PIN, DOWEL	2	SN: 10001-UP
17	04020-01228	• PIN, DOWEL	2	SN: 10001-UP
18	6136-52-1620	• PIN, DOWEL, OIL PUMP	1	SN: 10001-UP
19	07043-50108	• PLUG	6	SN: 10001-UP
20	6204-51-1620	• SHAFT, OIL PUMP	1	SN: 10001-UP
21	07046-44016	• PLUG	1	SN: 10001-UP
22	07046-23016	PLUG	1	SN: 10001-UP
23	6207-21-2110	LINER (MARK A), CYLINDER	-2	SN: 10001-UP
23	6207-21-2120	LINER (MARK B), CYLINDER	-2	SN: 10001-UP

Catalog signs: ☆ not supplied separately: assembly only △ semi-finished: additional work required

Reference: A2010-A0A8

Open this exact parts catalogue on K-Part

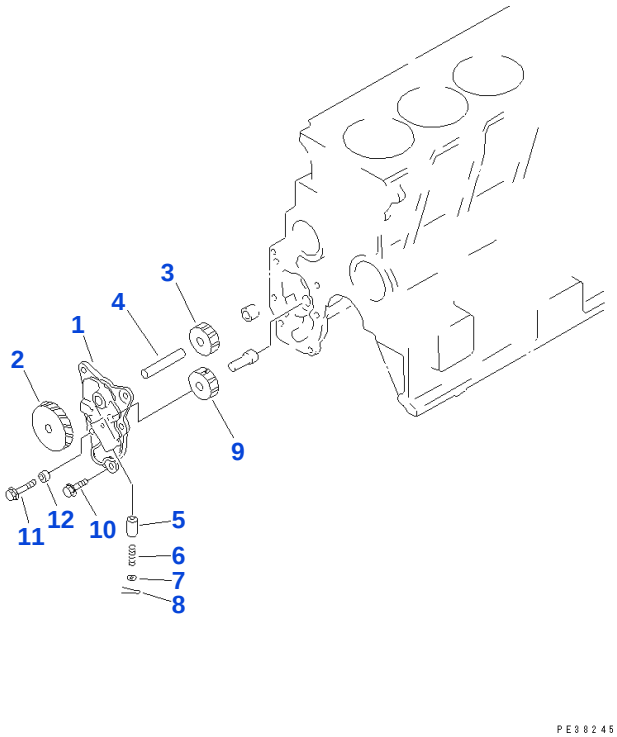

Reference: A2010-B0A8

030100 OIL PUMP

Item	Part No.	Part Name	Qty	Options
	6204-51-1201	COVER ASSEMBLY	1	SN: 10001-UP
1		• ☆ COVER	1	SN: 10001-UP
2	6206-51-1510	• GEAR	1	SN: 10001-UP
	6204-51-1400	• SHAFT ASSEMBLY	1	SN: 10001-UP
3		• • ☆ GEAR, DRIVE	1	SN: 10001-UP
4	6204-51-1420	• • SHAFT	1	SN: 10001-UP
5	6204-51-1310	• VALVE	1	SN: 10001-UP
6	6204-51-1320	• SPRING	1	SN: 10001-UP
7	6204-51-1330	• WASHER	1	SN: 10001-UP
8	6204-51-1340	• PIN, COTTER	1	SN: 10001-UP
9	6204-51-1610	GEAR, DRIVEN	1	SN: 10001-UP
10	01435-20816	BOLT	4	SN: 10001-UP
11	01435-20825	BOLT	1	SN: 10001-UP
12	6691-41-8230	SPACER, 10MM	1	SN: 10001-UP

Catalog signs: ☆ not supplied separately: assembly only

Reference: A2010-B0A8

Get the complete PDF catalogue

Komatsu 4D95L-1G2 (JPN) G-4D95L-1G2-D6 FOR GENERATOR STATIONARY EMERGENCY TOKYO ELECTRIC RADIATOR S/N 10001-UP (JAPANESE)

$89

with PayPal | Store cart: $99

Buy this PDF on Manuals Komatsu

Check the model, serial range and language before payment.

Download instructions are emailed after payment confirmation.

This free sample contains 10 catalogue pages.