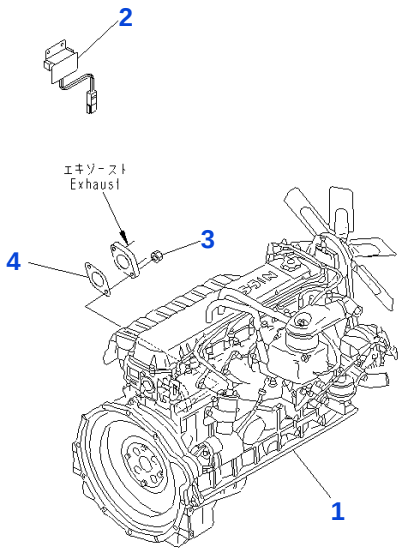

Reference: A4110-01A0

030010 ENGINE UNIT

Item	Part No.	Part Name	Qty	Options
	37C-1DA-3110	ENGINE ASSEMBLY, (FOR TORQUE CONVERTER)	1	SN: 100001-UP
	37C-1DA-3310	ENGINE ASSEMBLY, (FOR WET CLUTCH)	1	SN: 100001-UP
1	37C-1DA-3210	• ENGINE ASSEMBLY, (FOR TORQUE CONVERTER)	1	SN: 100001-UP
	37C-1DA-3410	• ENGINE ASSEMBLY, (FOR WET CLUTCH)	1	SN: 100001-UP
2	3EC-01-31310	• RESISTANCE	1	SN: 100001-UP
3	3EC-01-31320	• NAT	2	SN: 100001-UP
4	3EC-01-31330	• GASKET	1	SN: 100001-UP

Reference: A4110-01A0

Open this exact parts catalogue on K-Part

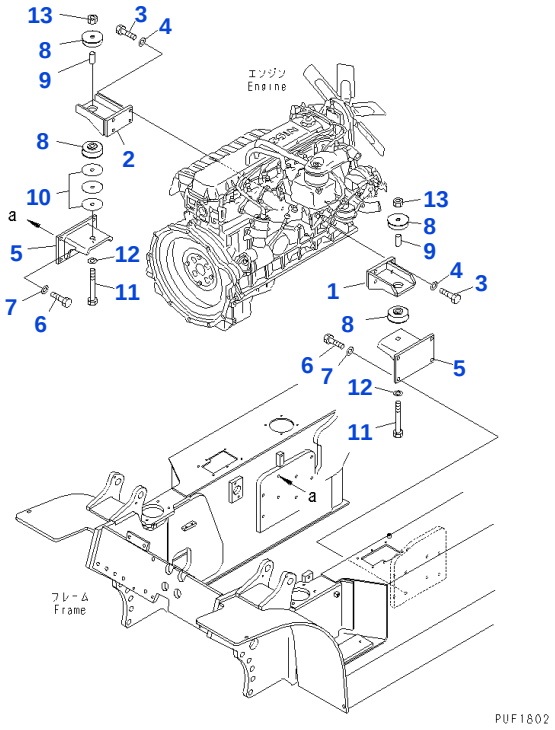

Reference: A4120-01A0

030020 ENGINE MOUNTING PARTS

Item	Part No.	Part Name	Qty	Options
1	3EC-01-32110SA	BRACKET, LEFT	1	SN: 100001-UP
2	3EC-01-32120SA	BRACKET, RIGHT	1	SN: 100001-UP
3	01010-81235	BOLT	8	SN: 100001-UP
4	01643-31232	WASHER	8	SN: 100001-UP
5	3EC-01-32130SA	BRACKET, (FOR FG33N/35N, 35Z/40Z)	2	SN: 100001-101374
	3EC-01-32160SA	BRACKET, (FOR FG35 TO 45)	2	SN: 100001-101374
6	01010-81235	BOLT	8	SN: 100001-101374
7	01643-31232	WASHER	8	SN: 100001-101374
8	3EB-01-31540	RUBBER	4	SN: 100001-UP
9	3EB-01-31550	COLLAR	2	SN: 100001-UP
10	3EB-01-31560	SHIM, 1.0MM	3	SN: 100001-UP
11	01011-81405	BOLT	2	SN: 100001-UP
12	01643-31445	WASHER	2	SN: 101673-UP
	304-01-31180	☐ WASHER	2	SN: 100001-101672
13	3EB-50-13180	U NUT	2	SN: 100001-UP

Catalog signs: ☐ part above may be used instead

Reference: A4120-01A0

Open this exact parts catalogue on K-Part

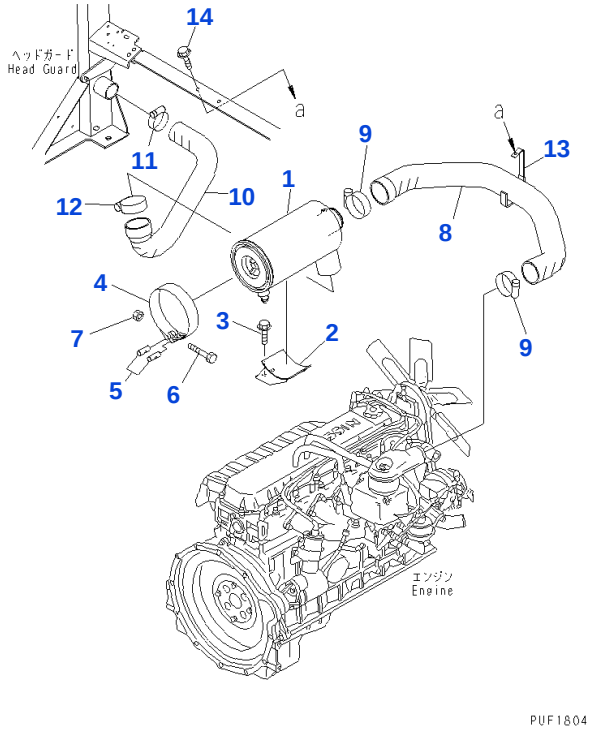

Reference: A4140-01A0

030030 AIR INTAKE CONNECTION

Item	Part No.	Part Name	Qty	Options
1	3EC-01-32210	AIR CLEANER	1	SN: 100001-UP
2	3EC-01-32220YA	BRACKET	1	SN: 100001-UP
3	01435-01020	BOLT	2	SN: 100001-UP
4	3EC-02-21590	BAND	1	SN: 100001-UP
5	3SB-02-14130	BAR	2	SN: 100001-UP
6	01016-50880	BOLT	1	SN: 100001-UP
7	01580-10806	NAT	1	SN: 100001-UP
8	3EC-01-32410	HOSE	1	SN: 100001-UP
9	07281-00909	CLAMP	2	SN: 100001-UP
10	3EC-01-32420	HOSE, (FOR FG33N/35N, 35Z/40Z)	1	SN: 100001-UP
	3EC-01-32520	HOSE, (FOR FG35 TO 45/50A)	1	SN: 100001-UP
11	07281-00809	CLAMP	1	SN: 100001-UP
12	07281-00909	CLAMP	1	SN: 100001-UP
13	3EC-01-32430	CLAMP,(FOR FG33N/35N, 35Z/40Z)	1	SN: 100001-UP
	3EC-01-32530	CLAMP, (FOR FG35 TO 45/50A)	1	SN: 100001-UP
14	01435-20820	BOLT	1	SN: 100001-UP

Reference: A4140-01A0

Open this exact parts catalogue on K-Part

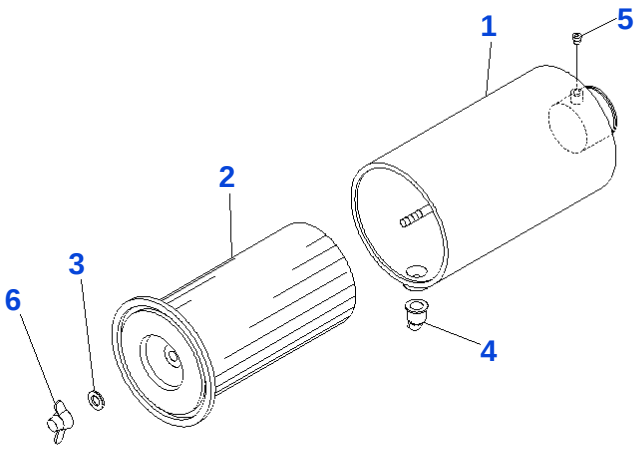

PUF1805

Reference: A4140-51A0

030040 AIR CLEANER

Item	Part No.	Part Name	Qty	Options
	3EC-01-32210	AIR CLEANER	1	SN: 100001-UP
1		• ☆ CASE	1	SN: 100001-UP
2	3EC-01-32240	• ELEMENT ASSEMBLY	1	SN: 100001-UP
3		• ☆ WASHER, SEAL	1	SN: 100001-UP
4		• ☆ VALVE	1	SN: 100001-UP
5		• ☆ PLUG	1	SN: 100001-UP
6	3EC-01-32280	• NUT,WING	1	SN: 100001-UP

Catalog signs: ☆ not supplied separately: assembly only

Reference: A4140-51A0

Open this exact parts catalogue on K-Part

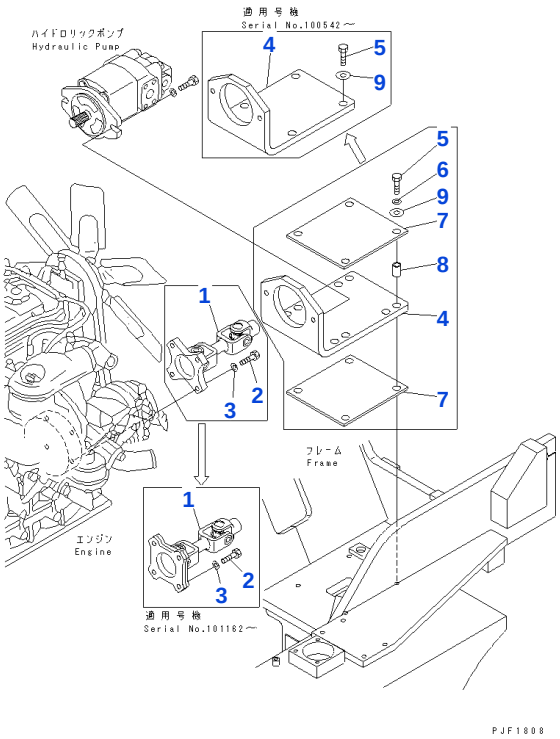

Reference: A4210-01A1

030050 PUMP DRIVE SYSTEM

Item	Part No.	Part Name	Qty	Options
1	3EC-01-32711	DRIVE SHAFT ASSEMBLY, DRIVE	1	SN: 101162-UP
	3EC-01-32710	☐ SHAFT ASSEMBLY, DRIVE	1	SN: 100001-101161
2	01010-81030	BOLT	4	SN: 101162-UP
	01010-81035	BOLT	4	SN: 100001-101161
3	01643-51032	WASHER	4	SN: 101162-UP
	01643-31032	WASHER	4	SN: 100001-101161
4	3EC-01-32811SA	BRACKET	1	SN: 100542-UP
	3EC-01-32810SA	BRACKET	1	SN: 100001-100451
5	01010-81030	BOLT	4	SN: 100542-UP
	01010-81055	BOLT	4	SN: 100001-100541
6	3EA-51-11390	WASHER	4	SN: 100001-100541
7	3EC-01-32820	RUBBER	2	SN: 100001-100541
8	3EC-01-32830	PIPE	4	SN: 100001-100541
9	01643-31032	WASHER	4	SN: 100001-UP

Catalog signs: ☐ part above may be used instead

Reference: A4210-01A1

Open this exact parts catalogue on K-Part

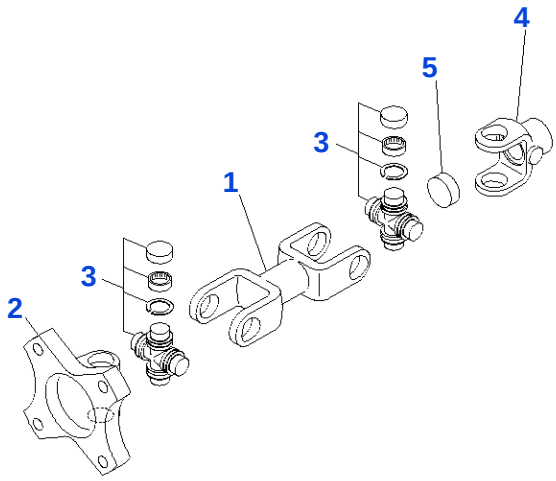

PUF1809

Reference: A4210-51A0

030060 PUMP DRIVE SHAFT (#100001-101161)

Item	Part No.	Part Name	Qty	Options
	3EC-01-32710	SHAFT ASSEMBLY, DRIVE	1	SN: 100001-101161
1	3EC-01-32730	• YOKE	1	SN: 100001-101161
2	3EC-01-32750	• FLANGE	1	SN: 100001-101161
3	3EC-01-32740	• JOINT ASSEMBLY	2	SN: 100001-101161
	3EC-01-32760	• YOKE	1	SN: 100001-101161
4	3EC-01-32770	• • YOKE	1	SN: 100001-101161
5	3EC-01-32780	• • PLUG	1	SN: 100001-101161

Reference: A4210-51A0

Open this exact parts catalogue on K-Part

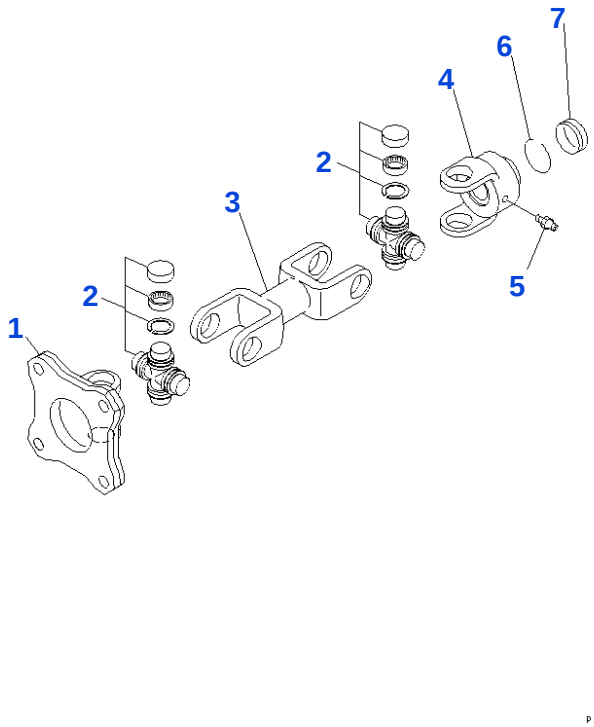

Reference: A4210-51A0A

030070 PUMP DRIVE SHAFT (#101162-)

Item	Part No.	Part Name	Qty	Options
	3EC-01-32711	DRIVE SHAFT ASSEMBLY, DRIVE	1	SN: 101162-UP
1	3EC-01-32610	• YOKE,FLANGE	1	SN: 101162-UP
2	3EC-01-32620	• JOINT ASSEMBLY, UNIVERSAL	2	SN: 101162-UP
3	3EC-01-32630	• YOKE	1	SN: 101162-UP
4	3EC-01-32640	• YOKE ASSEMBLY, SPLINE	1	SN: 101162-UP
5	3EC-01-32670	• NIPPLE, GREASE	1	SN: 101162-UP
6	3EC-01-32650	• WOW	1	SN: 101162-UP
7	3EC-01-32660	• SEAL, GREASE	1	SN: 101162-UP

Reference: A4210-51A0A

Open this exact parts catalogue on K-Part

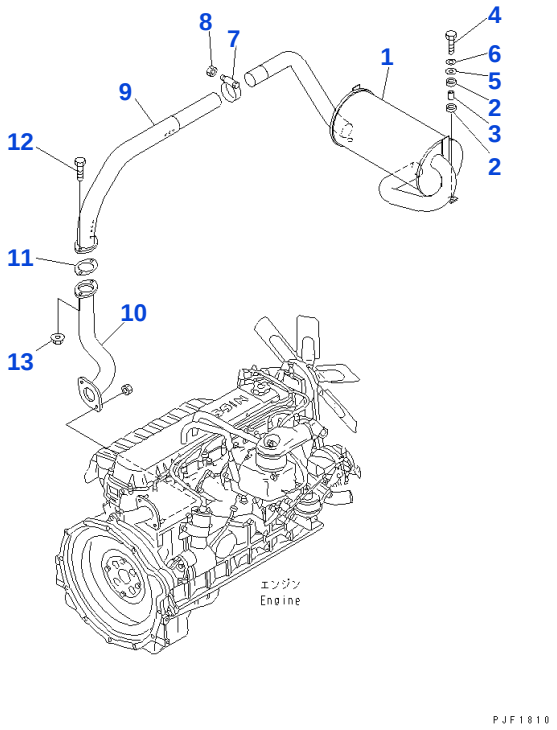

Reference: B4110-01A0

060010 MUFFLER AND EXHAUST CONNECTION

Item	Part No.	Part Name	Qty	Options
1	3EC-03-31110	MUFFLER	1	SN: 100001-UP
2	3EC-03-31120	RUBBER	4	SN: 100001-UP
3	3EC-03-31130	PIPE	2	SN: 100001-UP
4	01010-80845	BOLT	2	SN: 100001-UP
5	3EB-52-32140	WASHER	2	SN: 100001-UP
6	01643-30823	WASHER	2	SN: 100001-UP
7	3EC-03-31140	CLAMP	1	SN: 100001-UP
8	01580-10806	NAT	1	SN: 100001-UP
9	3EC-03-31211	PIPE, (FOR FG33N/35N, 35Z/40Z)	1	SN: 100025-UP
	3EC-03-31210	☐ PIPE, (FOR FG33N/35N, 35Z/40Z)	1	SN: 100001-100024
	3EC-03-31311	PIPE, (FOR FG35 AND 45/50A)	1	SN: 100025-UP
	3EC-03-31310	☐ PIPE, (FOR FG35 AND 45/50A)	1	SN: 100001-100024
10	3EC-03-31220	PIPE	1	SN: 100001-UP
11	3EA-03-31120	GASKET	1	SN: 100001-UP
12	01010-81035	BOLT	2	SN: 100001-UP
13	01584-01008	NAT	2	SN: 100001-UP

Catalog signs: ☐ part above may be used instead

Reference: B4110-01A0

Open this exact parts catalogue on K-Part

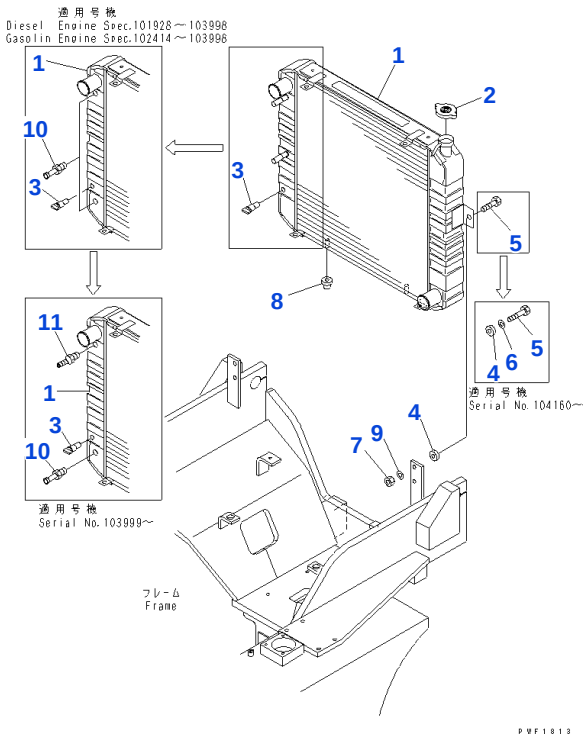

Reference: C4110-01A0

090010 RADIATOR (FOR CLUTCH)

Item	Part No.	Part Name	Qty	Options
1	3EC-04-33261	RADIATOR, (FOR DIESEL ENGINE)	1	SN: 101928-UP
	3EC-04-31111	RADIATOR, (FOR DIESEL ENGINE)	1	SN: 101643-101927
	3EC-04-33261	RADIATOR, (FOR GASOLINE ENGINE)	1	SN: 102414-UP
	3EC-04-31111	RADIATOR, (FOR GASOLINE ENGINE)	1	SN: 101643-102413
	3EC-04-31110	☐ RADIATOR, (FOR DIESEL/GASOLINE ENGINE)	1	SN: 100001-101642
2	46A-909-1150	• CAP	1	SN: 100001-UP
3	3EE-04-21340	• COCK ASSEMBLY	1	SN: 100001-UP
4	34B-04-15220	RUBBER	4	SN: 104160-UP
	34B-04-15220	RUBBER	2	SN: 100001-104159
5	01010-80845	BOLT	2	SN: 104160-UP
	01010-80835	☐ BOLT	2	SN: 100001-104159
6	3EB-52-32140	WASHER	2	SN: 104160-UP
7	01598-10809	NAT	2	SN: 100001-UP
8	3EC-04-12160	RUBBER	2	SN: 100001-UP
9	01640-20816	WASHER	2	SN: 100001-UP
10	3ED-13-35150	NIPPLE, (FOR DIESEL/GASOLINE ENGINE)	1	SN: 103999-UP
	3ED-13-35150	NIPPLE, (DIESEL ENGINE TYPE)	2	SN: 101928-103998
	3ED-13-35150	NIPPLE, (FOR GASOLINE ENGINE)	2	SN: 102414-103998
11	540-62-13240	NIPPLE, (FOR DIESEL/GASOLINE ENGINE)	1	SN: 103999-UP

Catalog signs: ☐ part above may be used instead

Reference: C4110-01A0

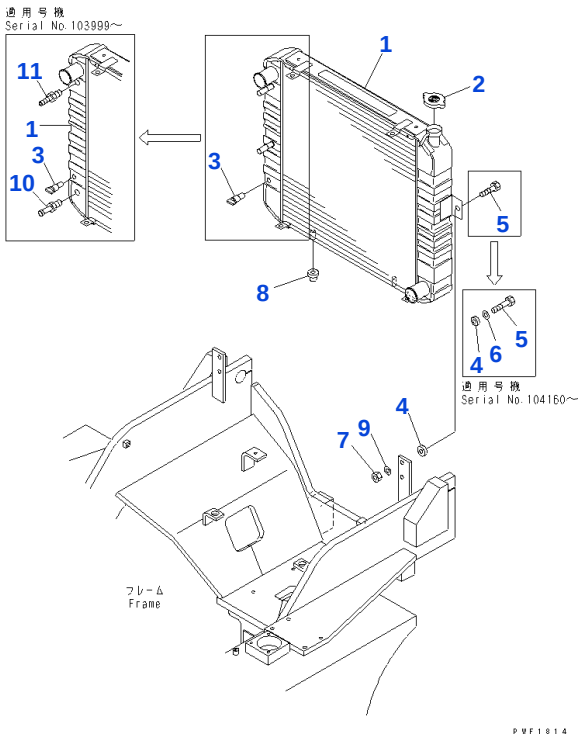

Reference: C4110-01A1

090020 RADIATOR (FOR TORQUE CONVERTER)

Item	Part No.	Part Name	Qty	Options
1	3EC-04-31220	RADIATOR	1	SN: 103999-UP
	3EC-04-31211	☐ RADIATOR	1	SN: 101643-103998
	3EC-04-31210	☐ RADIATOR	1	SN: 100001-101642
2	46A-909-1150	• CAP	1	SN: 100001-UP
3	3EE-04-21340	• COCK ASSEMBLY	1	SN: 100001-UP
4	34B-04-15220	RUBBER	4	SN: 104160-UP
	34B-04-15220	RUBBER	2	SN: 100001-104159
5	01010-80845	BOLT	2	SN: 104160-UP
	01010-80835	☐ BOLT	2	SN: 100001-104159
6	3EB-52-32140	WASHER	2	SN: 104160-UP
7	01598-10809	NAT	2	SN: 100001-UP
8	3EC-04-12160	RUBBER	2	SN: 100001-UP
9	01640-20816	WASHER	2	SN: 100001-UP
10	540-62-13240	NIPPLE	1	SN: 103999-UP
11	3ED-13-35150	NIPPLE	1	SN: 103999-UP

Catalog signs: ☐ part above may be used instead

Reference: C4110-01A1

Open this exact parts catalogue on K-Part

Get the complete PDF catalogue

Komatsu FG35-7 (JPN) Gasoline Engine Forklift S/N 100001-199999 (Japanese)

$89

with PayPal | Store cart: $99

Buy this PDF on Manuals Komatsu

Check the model, serial range and language before payment.

Download instructions are emailed after payment confirmation.

This free sample contains 10 catalogue pages.