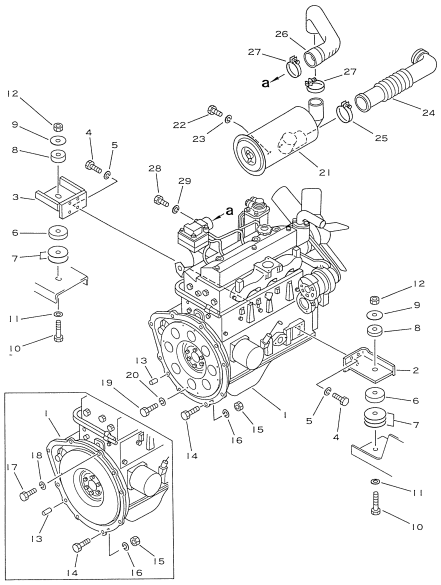

Reference: 1021

030010 ENGINE MOUNTING COMPONENTS(#370001-470000)

Item	Part No.	Part Name	Qty	Options
1	37B-1DF-2210	ENGINE, (FOR DRY CLUTCH)	1	SN: 370001-470000
	37B-1DF-2220	ENGINE, (WITH TORQUE CONVERTER)	1	SN: 370001-470000
	37B-1DF-2290	ENGINE, (WITH WET CLUTCH)	1	SN: 447734-470000
	37B-1DF-2230	ENGINE, (WITH WET CLUTCH)	1	SN: 370001-447733
2	3EB-02-14421	BRACKET, LEFT	1	SN: 370001-470000
3	3EB-02-14440	BRACKET, RIGHT	1	SN: 370001-470000
4	01010-51030	BOLT	8	SN: 370001-470000
5	01602-21030	WASHER, SPRING	8	SN: 370001-470000
6	3EB-01-27130	RUBBER	2	SN: 370001-470000
7	304-01-31160	SHIM, 1.0MM	3	SN: 370001-470000
8	3EB-01-27140	RUBBER	2	SN: 370001-470000
9	304-01-31150	PLATE	2	SN: 370001-470000
10	01010-51685	BOLT	2	SN: 370001-470000
11	01643-31645	WASHER	2	SN: 370001-470000
12	34B-01-15150	NAT	2	SN: 370001-470000
13	04020-01228	PIN, DOWEL	2	SN: 370001-470000
14	01010-51045	BOLT, (FOR DRY CLUTCH AND TORQUE CONVERTER)	7	SN: 370001-470000
	01010-51045	BOLT, (FOR WET CLUTCH)	5	SN: 370001-470000
15	01580-11008	NUT, (FOR DRY CLUTCH AND TORQUE CONVERTER)	7	SN: 370001-470000
	01580-11008	NUT, (FOR WET CLUTCH)	5	SN: 370001-470000
16	01602-21030	WASHER, SPRING (DRY CLUTCH AND TORCON)	7	SN: 370001-470000
	01602-21030	WASHER, SPRING (FOR WET CLUTCH)	5	SN: 370001-470000
17	01010-51030	BOLT, (FOR WET CLUTCH)	3	SN: 370001-470000
18	01602-21030	WASHER, SPRING (FOR WET CLUTCH)	3	SN: 370001-470000
19	01010-50816	BOLT, (FOR TORQUE CONVERTER)	8	SN: 370001-470000
20	01602-20825	WASHER, SPRING (FOR TORQUE CONVERTER)	8	SN: 370001-470000
21	37B-1CB-2021	AIR CLEANER ASSEMBLY	1	SN: 370001-470000
22	01010-50812	BOLT	2	SN: 370001-470000
23	01602-20825	WASHER, SPRING	2	SN: 370001-470000
24	3EB-01-25160	HOSE	1	SN: 370001-470000
25	07280-06429	CLAMP	1	SN: 370001-470000
26	3EB-02-26211	HOSE	1	SN: 370001-470000

Open this exact parts catalogue on K-Part

Item	Part No.	Part Name	Qty	Options
27	07280-06429	CLAMP	2	SN: 370001-470000
28	01010-50635	BOLT	1	SN: 370001-470000
29	01602-20619	WASHER, SPRING	1	SN: 370001-470000

Reference: 1021

Open this exact parts catalogue on K-Part

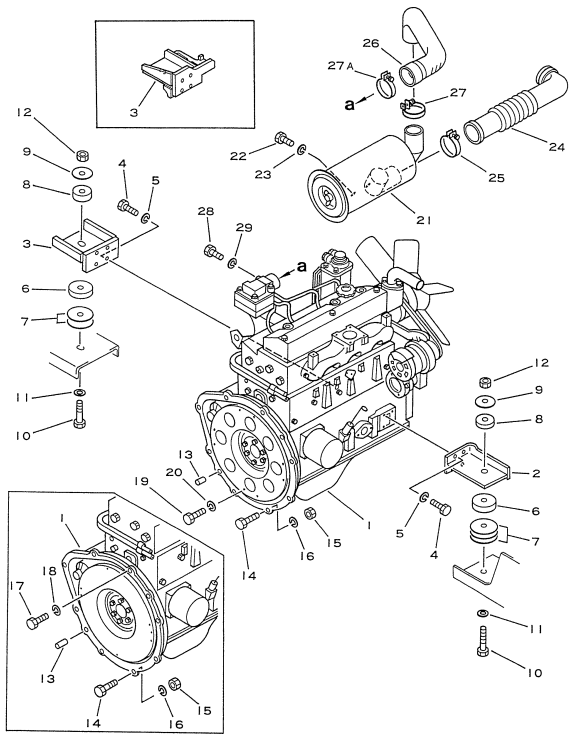

Reference: 1021A

030020 ENGINE MOUNTING PARTS(#470001-471501)

Item	Part No.	Part Name	Qty	Options
1	37B-1DF-2210	ENGINE, (FOR DRY CLUTCH)	1	SN: 470001-471501
	37B-1DF-2220	ENGINE, (WITH TORQUE CONVERTER)	1	SN: 470001-471501
	37B-1DF-2290	ENGINE, (WITH WET CLUTCH)	1	SN: 470001-471501
2	3EB-02-27311	BRACKET, LEFT	1	SN: 470001-471501
3	3EB-02-14441	BRACKET, RIGHT	1	SN: 470001-471501
	3EB-02-27710	BRACKET, RIGHT (WET CLUTCH SPEC)	1	SN: 470001-471501
4	01010-51030	BOLT	8	SN: 470001-471501
5	01602-21030	WASHER, SPRING	8	SN: 470001-471501
6	3EB-01-27130	RUBBER	2	SN: 470001-471501
7	304-01-31160	SHIM, 1.0MM	3	SN: 470001-471501
8	3EB-01-27140	RUBBER	2	SN: 470001-471501
9	304-01-31150	PLATE	2	SN: 470001-471501
10	01010-51685	BOLT	2	SN: 470001-471501
11	01643-31645	WASHER	2	SN: 470001-471501
12	34B-01-15150	NAT	2	SN: 470001-471501
13	04020-01228	PIN, DOWEL	2	SN: 470001-471501
14	01010-51045	BOLT, (FOR DRY CLUTCH AND TORQUE CONVERTER)	7	SN: 470001-471501
	01010-51045	BOLT, (FOR WET CLUTCH)	5	SN: 470001-471501
15	01580-11008	NUT, (FOR DRY CLUTCH AND TORQUE CONVERTER)	7	SN: 470001-471501
	01580-11008	NUT, (FOR WET CLUTCH)	5	SN: 470001-471501
16	01602-21030	WASHER, SPRING (DRY CLUTCH AND TORCON)	7	SN: 470001-471501
	01602-21030	WASHER, SPRING (FOR WET CLUTCH)	5	SN: 470001-471501
17	01010-51030	BOLT, (FOR WET CLUTCH)	3	SN: 470001-471501
18	01602-21030	WASHER, SPRING (FOR WET CLUTCH)	3	SN: 470001-471501
19	01010-50816	BOLT, (FOR TORQUE CONVERTER)	8	SN: 470001-471501
20	01602-20825	WASHER, SPRING (FOR TORQUE CONVERTER)	8	SN: 470001-471501
21	37B-1CB-2021	AIR CLEANER ASSEMBLY	1	SN: 470001-471501
22	01010-50812	BOLT	2	SN: 470001-471501
23	01602-20825	WASHER, SPRING	2	SN: 470001-471501
24	3EB-01-25160	HOSE	1	SN: 470001-471501
25	07280-06429	CLAMP	1	SN: 470001-471501
26	3EB-02-26211	HOSE	1	SN: 470001-471501

Open this exact parts catalogue on K-Part

Item	Part No.	Part Name	Qty	Options
27	07280-06429	CLAMP	1	SN: 470001-471501
27A	07280-06729	CLAMP	1	SN: 470001-471501
28	01010-50635	BOLT	1	SN: 470001-471501
29	01602-20619	WASHER, SPRING	1	SN: 470001-471501

Reference: 1021A

Open this exact parts catalogue on K-Part

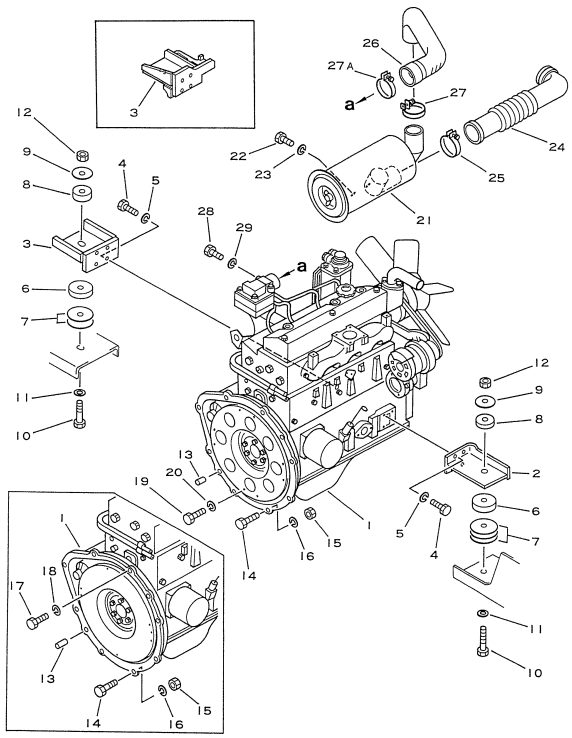

Reference: 1021B

030030 ENGINE MOUNTING PARTS (#471502-)

Item	Part No.	Part Name	Qty	Options
1	37B-1DF-2210	ENGINE, (FOR DRY CLUTCH)	1	SN: 471502-UP
	37B-1DF-2220	ENGINE, (WITH TORQUE CONVERTER)	1	SN: 471502-UP
	37B-1DF-2290	ENGINE, (WITH WET CLUTCH)	1	SN: 471502-UP
2	3EB-02-27312	BRACKET, LEFT	1	SN: 471502-UP
3	3EB-02-14441	BRACKET, RIGHT	1	SN: 471502-UP
	3EB-02-27710	BRACKET, RIGHT (WET CLUTCH SPEC)	1	SN: 471502-UP
4	01010-51030	BOLT	8	SN: 471502-UP
5	01602-21030	WASHER, SPRING	8	SN: 471502-UP
6	3EB-02-27930	RUBBER	2	SN: 471518-UP
	3EB-01-27130	RUBBER	2	SN: 471502-471517
7	304-01-31160	SHIM, 1.0MM	3	SN: 471502-UP
8	3EB-01-27140	RUBBER	2	SN: 471502-UP
9	304-01-31150	PLATE	2	SN: 471502-UP
10	01010-51685	BOLT	2	SN: 471502-UP
11	01643-31645	WASHER	2	SN: 471502-UP
12	34B-01-15150	NAT	2	SN: 471502-UP
13	04020-01228	PIN, DOWEL	2	SN: 471502-UP
14	01010-51045	BOLT, (FOR DRY CLUTCH AND TORQUE CONVERTER)	7	SN: 471502-UP
	01010-51045	BOLT, (FOR WET CLUTCH)	5	SN: 471502-UP
15	01580-11008	NUT, (FOR DRY CLUTCH AND TORQUE CONVERTER)	7	SN: 471502-UP
	01580-11008	NUT, (FOR WET CLUTCH)	5	SN: 471502-UP
16	01602-21030	WASHER, SPRING (DRY CLUTCH AND TORCON)	7	SN: 471502-UP
	01602-21030	WASHER, SPRING (FOR WET CLUTCH)	5	SN: 471502-UP
17	01010-51030	BOLT, (FOR WET CLUTCH)	3	SN: 471502-UP
18	01602-21030	WASHER, SPRING (FOR WET CLUTCH)	3	SN: 471502-UP
19	01010-50816	BOLT, (FOR TORQUE CONVERTER)	8	SN: 471502-UP
20	01602-20825	WASHER, SPRING (FOR TORQUE CONVERTER)	8	SN: 471502-UP
21	37B-1CB-2021	AIR CLEANER ASSEMBLY	1	SN: 471502-UP
22	01010-50812	BOLT	2	SN: 471502-UP
23	01602-20825	WASHER, SPRING	2	SN: 471502-UP
24	3EB-01-25160	HOSE	1	SN: 471502-UP
25	07280-06429	CLAMP	1	SN: 471502-UP

Open this exact parts catalogue on K-Part

Item	Part No.	Part Name	Qty	Options
26	3EB-02-26211	HOSE	1	SN: 471502-UP
27	07280-06429	CLAMP	1	SN: 471502-UP
27A	07280-06729	CLAMP	1	SN: 471502-UP
28	01010-50635	BOLT	1	SN: 471502-UP
29	01602-20619	WASHER, SPRING	1	SN: 471502-UP

Reference: 1021B

Open this exact parts catalogue on K-Part

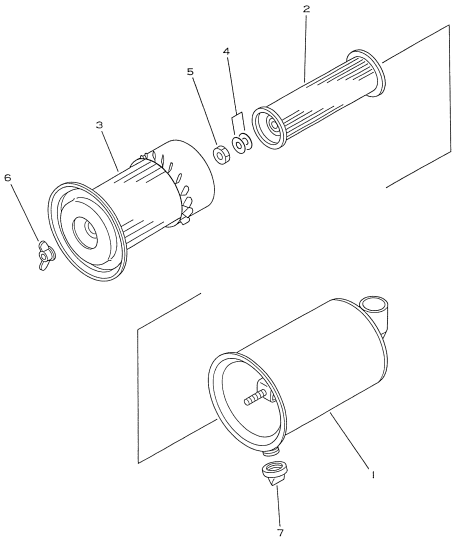

Reference: 1101

030040 AIR CLEANER

Item	Part No.	Part Name	Qty	Options
	37B-1CB-2021	AIR CLEANER ASSEMBLY	1	SN: 370001-UP
1	3EB-02-25510	• BODY ASSEMBLY	1	SN: 370001-UP
2	3EB-02-25550	• ELEMENT ASSEMBLY, INNER	1	SN: 370001-UP
3	3EC-01-11630	• ELEMENT ASSEMBLY, OUTER	1	SN: 370001-UP
4	3EB-02-25570	• GASKET	1	SN: 370001-UP
5	3EB-02-25560	• NAT	1	SN: 370001-UP
6	34B-02-31650	• NUT ASSEMBLY, WING	1	SN: 370001-UP
7	3EA-01-17150	• VALVE, VACUUM	1	SN: 370001-UP

Reference: 1101

Open this exact parts catalogue on K-Part

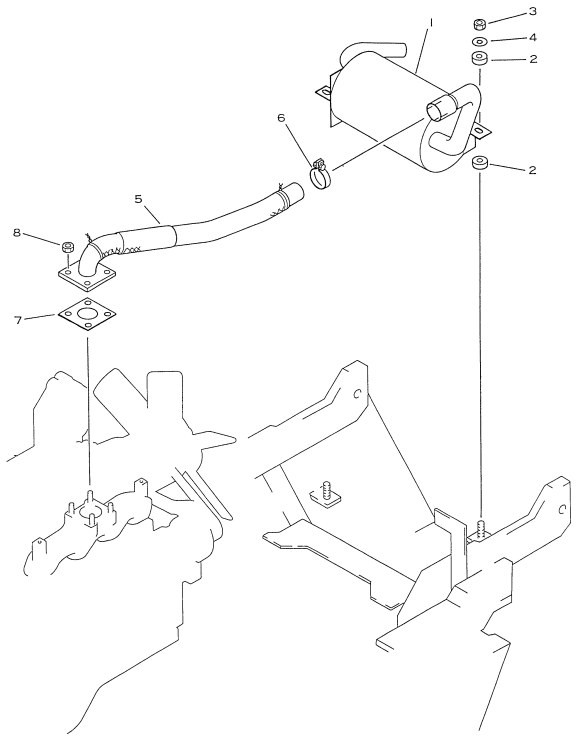

Reference: 1201

030050 EXHAUST SYSTEM (#370001-470000)

Item	Part No.	Part Name	Qty	Options
1	3EB-03-21312	MUFFLER	1	SN: 370001-470000
	3EB-03-25110	MUFFLER, SIDE	1	SN: 370001-470000
	3EB-03-25120	• SIDE SHIFT	1	SN: 370001-470000
2	3EA-03-11120	RUBBER	4	SN: 370001-470000
3	01598-11011	NAT	2	SN: 370001-470000
4	3EA-51-11390	WASHER	2	SN: 370001-470000
5	3EB-03-22710	PIPE	1	SN: 370001-470000
6	3EB-03-22150	CLAMP SUB ASSEMBLY	1	SN: 370001-470000
	01010-50830	• BOLT	1	SN: 370001-470000
	01602-20825	• WASHER, SPRING	1	SN: 370001-470000
7	6130-12-5580	GASKET	1	SN: 370001-470000
8	6142-12-5850	NAT	4	SN: 370001-470000

Reference: 1201

Open this exact parts catalogue on K-Part

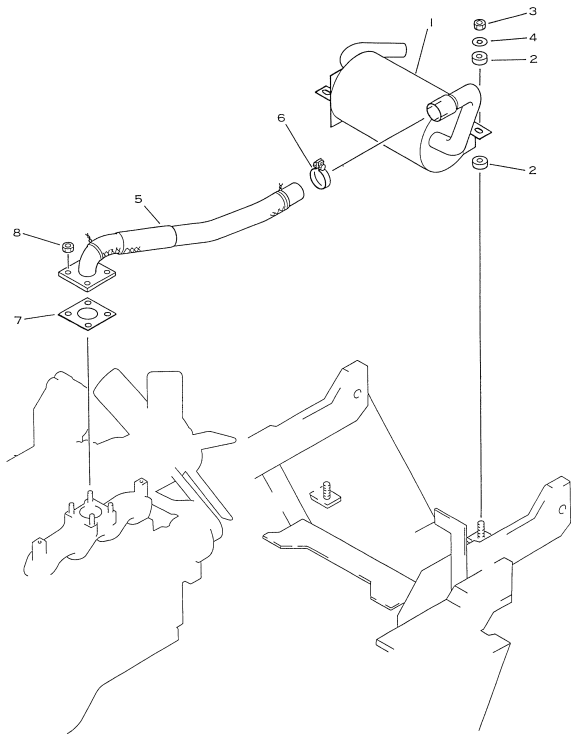

Reference: 1201A

030060 EXHAUST SYSTEM (#470001-)

Item	Part No.	Part Name	Qty	Options
1	3EB-03-21313	MUFFLER	1	SN: 470001-UP
	3EB-03-25110	MUFFLER, SIDE	1	SN: 470001-UP
	3EB-03-25120	• SIDE SHIFT	1	SN: 470001-UP
2	3EA-03-11120	RUBBER	4	SN: 470001-UP
3	01598-11011	NAT	2	SN: 470001-UP
4	3EA-51-11390	WASHER	2	SN: 470001-UP
5	3EB-03-22710	PIPE	1	SN: 470001-UP
6	3EB-03-22151	CLAMP SUB ASSEMBLY	1	SN: 470001-UP
	01010-50830	• BOLT	1	SN: 470001-UP
	01602-20825	• WASHER, SPRING	1	SN: 470001-UP
7	6130-12-5580	GASKET	1	SN: 470001-UP
8	6142-12-5850	NAT	4	SN: 470001-UP

Reference: 1201A

Open this exact parts catalogue on K-Part

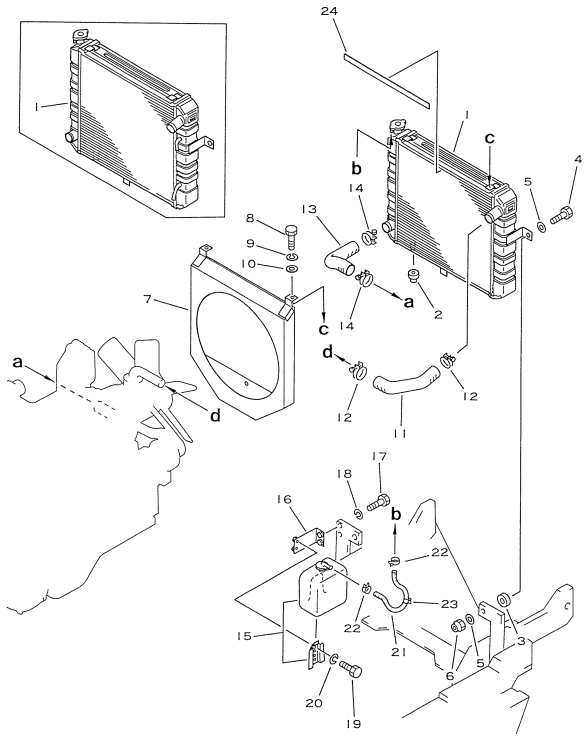

Reference: 1301

030070 RADIATOR (#370001-470000)

Item	Part No.	Part Name	Qty	Options
1	3EB-04-21210	RADIATOR ASSEMBLY, (FOR CLUTCH)	1	SN: 370001-470000
	3EB-04-22210	RADIATOR ASSEMBLY, (FOR TORQUE CONVERTER)	1	SN: 370001-470000
	3EB-04-21130	• CAP	1	SN: 370001-470000
	34B-04-11240	• VALVE, DRAIN	1	SN: 370001-470000
	34B-04-11250	• PACKING	1	SN: 370001-470000
2	3EC-04-12160	RUBBER	2	SN: 370001-470000
3	34B-04-15220	RUBBER	2	SN: 370001-470000
4	01010-50835	BOLT	2	SN: 370001-470000
5	01642-20810	WASHER	4	SN: 370001-470000
6	01598-10809	NAT	2	SN: 370001-470000
7	37B-1CR-2012	SHROUD, (FOR TORQUE CONVERTER)	1	SN: 370001-470000
8	01010-50812	BOLT, (FOR TORQUE CONVERTER)	3	SN: 370001-470000
9	01602-20825	WASHER, SPRING (FOR TORQUE CONVERTER)	3	SN: 370001-470000
10	01642-20810	WASHER, (FOR TORQUE CONVERTER)	3	SN: 370001-470000
11	3EB-04-23730	HOSE	1	SN: 370001-470000
12	07280-04126	CLAMP	2	SN: 370001-470000
13	3EB-04-23720	HOSE	1	SN: 370001-470000
14	07280-04126	CLAMP	2	SN: 370001-470000
15	3EB-04-25160	TANK ASSEMBLY, RESERVER	1	SN: 370001-470000
16	3EB-04-25131	BRACKET	1	SN: 370001-470000
17	01010-50820	BOLT	2	SN: 370001-470000
18	01602-20825	WASHER, SPRING	2	SN: 370001-470000
19	01010-50612	BOLT	2	SN: 370001-470000
20	01602-20619	WASHER, SPRING	2	SN: 370001-470000
21	46B-909-1410	HOSE	1	SN: 370001-470000
22	07285-00110	CLIP	2	SN: 370001-470000
23	3EB-04-25140	CLAMP	1	SN: 370001-470000
24	3EB-04-23250	RUBBER, (FOR TORQUE CONVERTER)	1	SN: 370001-470000

Reference: 1301

Open this exact parts catalogue on K-Part

Get the complete PDF catalogue

Komatsu FD20H-11 (JPN) Diesel Engine Forklift S/N 370001-471900 (Japanese)

$89

with PayPal | Store cart: $99

Buy this PDF on Manuals Komatsu

Check the model, serial range and language before payment.

Download instructions are emailed after payment confirmation.

This free sample contains 10 catalogue pages.