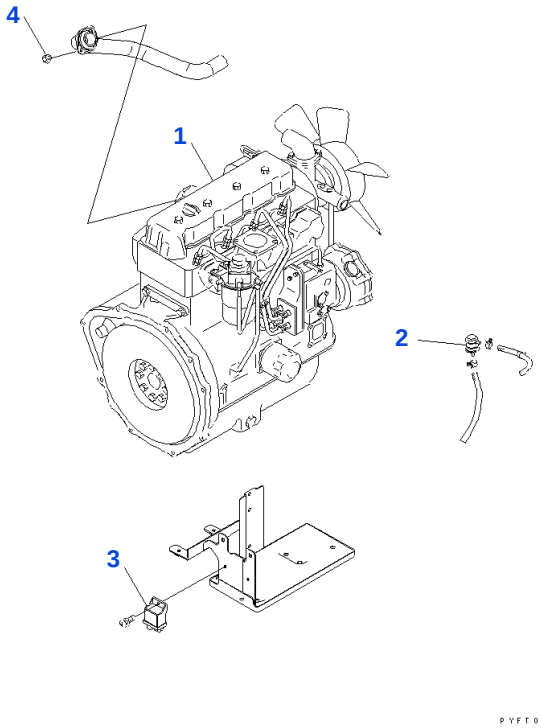

Reference: A4110-01A0

030010 ENGINE UNIT (FOR DRY CLUTCH AND TORQUE CONVERTER)

Item	Part No.	Part Name	Qty	Options
1	37B-1DE-6411	ENGINE, 4D94LE	1	SN: 300001-UP
	37B-1DE-6711	ENGINE, 4D98E	1	SN: 300001-UP
2	YM129052-55630	• FILTER	1	SN: 300001-UP
3	YM129930-77950	• CONTROLLER, 4D94LE	1	SN: 300001-UP
	YM129930-77970	• CONTROLLER, 4D98E	1	SN: 300001-UP
4	YM26366-080002	• NAT	2	SN: 300001-UP

Reference: A4110-01A0

Open this exact parts catalogue on K-Part

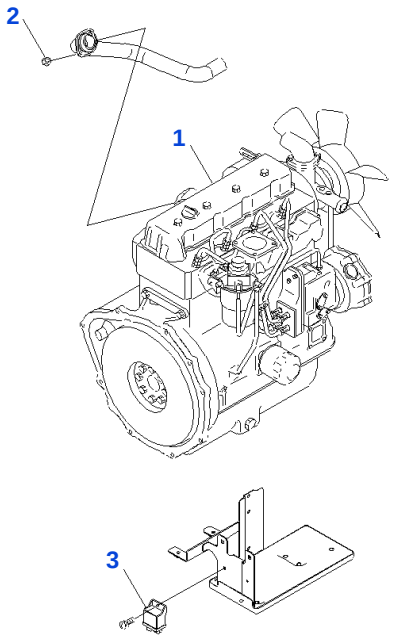

Reference: A4110-01A1

030020 ENGINE UNIT (POOR FUEL QUALITY)

Item	Part No.	Part Name	Qty	Options
1	37B-1DE-6444	ENGINE, 4D94LE	1	SN: 308281-UP
	37B-1DE-6443	ENGINE, 4D94LE	1	SN: 307821-308280
	37B-1DE-6442	ENGINE, 4D94LE	1	SN: 300001-307820
2	3EB-02-61310	• NAT	2	SN: 300001-UP
3	3EB-02-61320	• CONTROLLER	1	SN: 300001-UP
	YM129052-55630	• FILTER, (WITHOUT ELEMENT)	1	SN: 300001-UP
	YM129907-55801	• CARTRIDGE, (WITHOUT SUSPENSION)	1	SN: 300001-UP
	YM129612-52100	• FEED PUMP ASSEMBLY, FUEL (WITHOUT FILTER)	1	SN: 300001-UP

Reference: A4110-01A1

Open this exact parts catalogue on K-Part

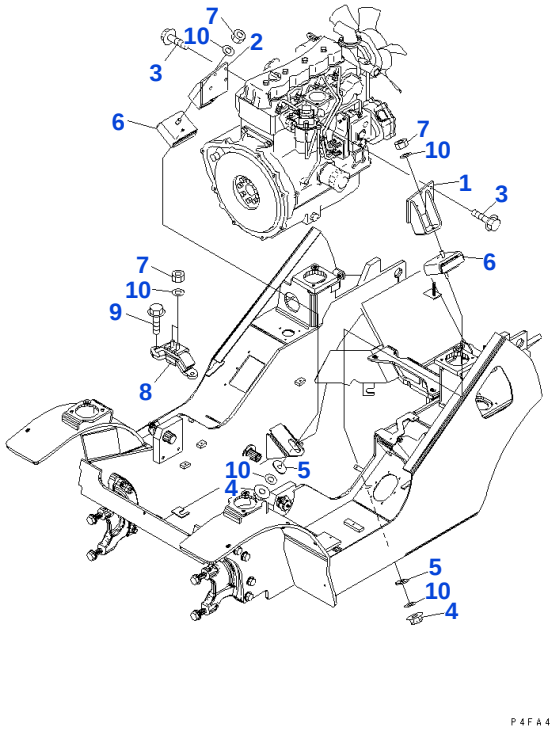

Reference: A4120-01A0

030030 ENGINE MOUNTING PARTS

Item	Part No.	Part Name	Qty	Options
1	3EB-02-52111	BRACKET, LEFT	1	SN: 300001-UP
2	3EB-02-52121	BRACKET, RIGHT	1	SN: 300001-UP
3	01010-81025	BOLT	8	SN: 300001-UP
	01643-31032	WASHER	8	SN: 300001-UP
4	01596-01211	NAT	6	SN: 300001-UP
5	3EB-01-51190	WASHER	2	SN: 300001-UP
6	3EB-01-61130	CUSHION	2	SN: 300001-UP
7	01580-11210	NAT	4	SN: 300001-UP
8	3EB-02-52130	MOUNT	1	SN: 300001-UP
9	3EA-71-12790	BOLT	2	SN: 300001-UP
10	01643-31232	WASHER	6	SN: 300001-UP

Reference: A4120-01A0

Open this exact parts catalogue on K-Part

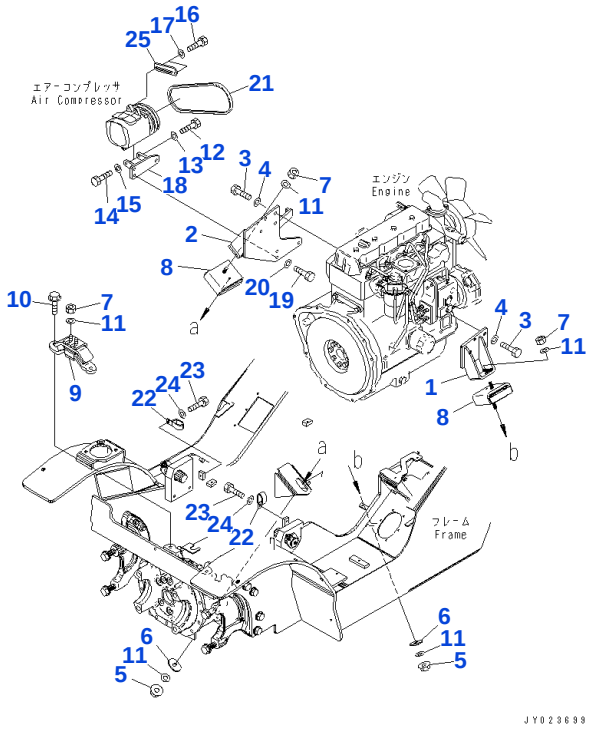

Reference: A4120-01P0

030040 ENGINE MOUNTING PARTS (FOR STEEL CAB COOLER WITH)

Item	Part No.	Part Name	Qty	Options
1	3EB-02-52111	BRACKET	1	SN: 300001-UP
2	3EB-02-54113	BRACKET	1	SN: 300001-UP
3	01010-81025	BOLT	8	SN: 300001-UP
4	01643-31032	WASHER	8	SN: 300001-UP
5	01596-01211	NAT	2	SN: 300001-UP
6	3EB-01-51190	WASHER	2	SN: 300001-UP
7	01580-11210	NAT	4	SN: 300001-UP
8	3EB-01-61130	CUSHION	2	SN: 300001-UP
9	3EB-02-52130	MOUNT	1	SN: 300001-UP
10	3EA-71-12790	BOLT	2	SN: 300001-UP
11	01643-31232	WASHER	6	SN: 300001-UP
12	01010-80830	BOLT	1	SN: 300001-UP
13	01643-30823	WASHER	1	SN: 300001-UP
14	01010-80840	BOLT	1	SN: 300001-UP
15	01643-30823	WASHER	1	SN: 300001-UP
16	01010-80825	BOLT	1	SN: 300001-UP
17	01643-30823	WASHER	1	SN: 300001-UP
18	3EB-01-54130	BRACKET	1	SN: 300001-UP
19	01010-81035	BOLT	3	SN: 300001-UP
20	01643-31032	WASHER	3	SN: 300001-UP
21	3EB-01-34490	V BELT	1	SN: 300001-UP
22	04435-52208	CLIP	2	SN: 300001-UP
23	01010-80816	BOLT	2	SN: 300001-UP
24	01643-30823	WASHER	2	SN: 300001-UP
25	3EB-01-54121	PLATE	1	SN: 300001-UP

Reference: A4120-01P0

Open this exact parts catalogue on K-Part

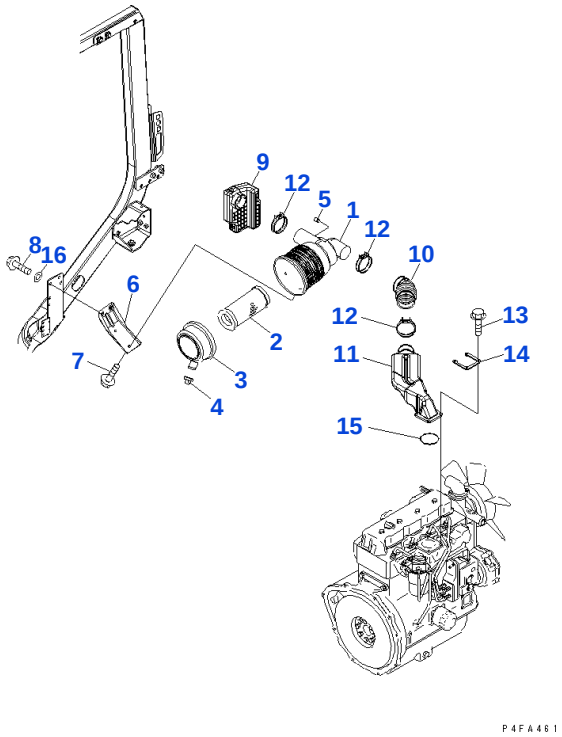

Reference: A4140-01A0

030050 AIR INTAKE CONNECTION

Item	Part No.	Part Name	Qty	Options
	3EB-02-44710	AIR CLEANER ASSEMBLY	1	SN: 300001-UP
1		• ☆ BODY ASSEMBLY	1	SN: 300001-UP
2	3EB-02-63210	• ELEMENT ASSEMBLY	1	SN: .-UP
	3EB-02-34750	• ◆ ELEMENT ASSEMBLY	1	SN: 300001-.
3	3EB-02-34761	• COVER ASSEMBLY	1	SN: 300001-UP
4	3EB-02-44770	• VALVE,VACUUM	1	SN: 300001-UP
5	3EB-02-34780	• CAP	1	SN: 300001-UP
6	3EB-02-41730	BRACKET	1	SN: 300001-UP
7	01010-80820	BOLT	2	SN: 300001-UP
	01643-30823	WASHER	2	SN: 300001-UP
8	01010-80820	BOLT	2	SN: 300001-UP
	01643-30823	WASHER	2	SN: 300001-UP
9	3EB-02-52211	SILENCER	1	SN: 300001-UP
10	3EB-02-52220	HOSE	1	SN: 300001-UP
11	3EB-02-52230	CONNECTOR	1	SN: 300001-UP
12	07280-07429	CLAMP	3	SN: 300001-UP
13	01010-80825	BOLT	4	SN: 300001-UP
	01643-30823	WASHER	4	SN: 300001-UP
14	3EB-02-34630	PLATE	1	SN: 300001-UP
15	07000-72075	O-RING	1	SN: 300001-UP
16	34A-42-41130	WASHER	2	SN: 300001-UP

Catalog signs: ☆ not supplied separately: assembly only ◆ interchangeable with part above

Reference: A4140-01A0

Open this exact parts catalogue on K-Part

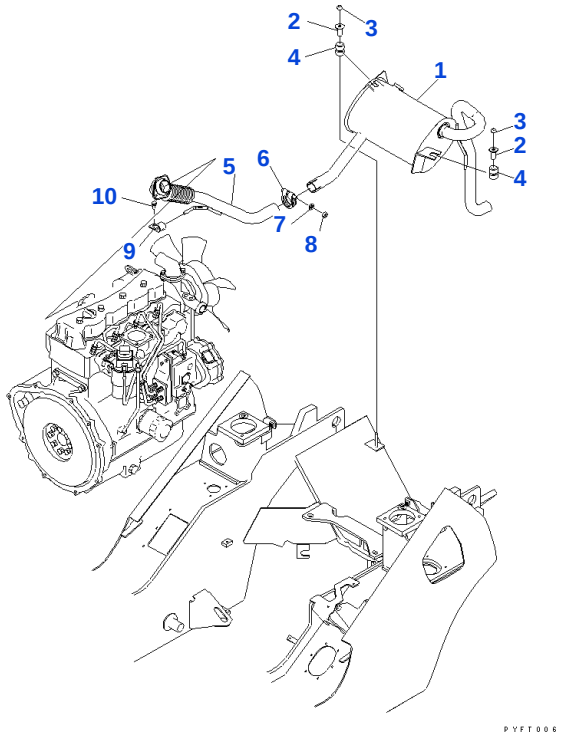

Reference: B4110-01A0

060010 MUFFLER AND EXHAUST CONNECTION

Item	Part No.	Part Name	Qty	Options
1	3EB-03-51112	MUFFLER	1	SN: 300001-UP
2	3EB-03-51131	COLLAR	2	SN: 300001-UP
3	01596-01009	NAT	2	SN: 300001-UP
4	3EB-03-41120	RUBBER	2	SN: 300001-UP
5	3EB-03-52120	PIPE	1	SN: 300001-UP
6	3EB-03-31530	CLAMP	1	SN: 300001-UP
7	01643-31032	WASHER	1	SN: 300001-UP
8	01582-11008	NAT	1	SN: 300001-UP
9	3EB-03-51170	BRACKET	1	SN: 300001-UP
10	01010-80820	BOLT	1	SN: 300001-UP
	01643-30823	WASHER	1	SN: 300001-UP

Reference: B4110-01A0

Open this exact parts catalogue on K-Part

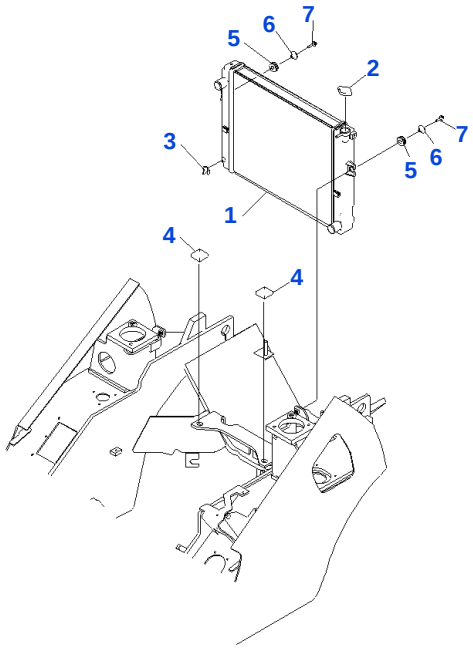

Reference: C4110-01A0

090010 RADIATOR (FOR TORQUE CONVERTER)

Item	Part No.	Part Name	Qty	Options
1	3EA-04-51210	RADIATOR	1	SN: 300001-UP
2	3EB-04-21130	• CAP	1	SN: 300001-UP
3	3EB-04-31140	• COCK ASSEMBLY	1	SN: 300001-UP
4	3EB-04-41160	RUBBER	2	SN: 300001-UP
5	3EB-04-31170	RUBBER	2	SN: 300001-UP
6	3EB-04-31180	COLLAR	2	SN: 300001-UP
7	01010-80830	BOLT	2	SN: 300001-UP
	01643-30823	WASHER	2	SN: 300001-UP

Reference: C4110-01A0

Open this exact parts catalogue on K-Part

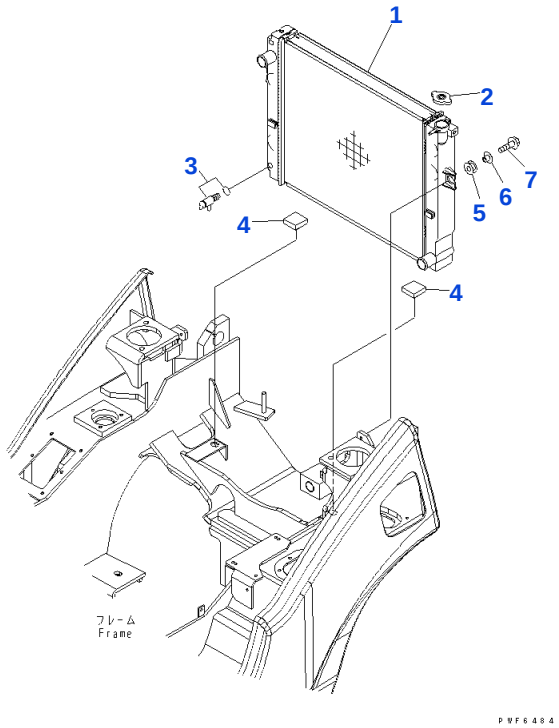

Reference: C4110-01A3

090020 RADIATOR (DRY CLUTCH SPEC)

Item	Part No.	Part Name	Qty	Options
1	3EA-04-43110	RADIATOR	1	SN: 300001-UP
2	3EB-04-21130	• CAP	1	SN: 300001-UP
3	3EB-04-31140	• COCK ASSEMBLY	1	SN: 300001-UP
4	3EB-04-41160	RUBBER	2	SN: 300001-UP
5	3EB-04-31170	RUBBER	2	SN: 300001-UP
6	3EB-04-31180	COLLAR	2	SN: 300001-UP
7	01010-80830	BOLT	2	SN: 300001-UP
	01643-30823	WASHER	2	SN: 300001-UP

Reference: C4110-01A3

Open this exact parts catalogue on K-Part

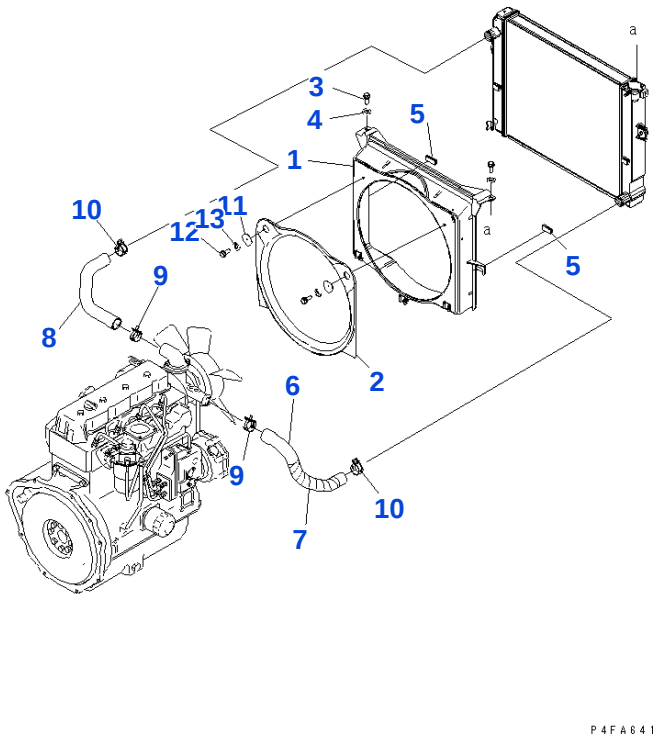

Reference: C4130-01A0

090030 SHROUD AND HOSE

Item	Part No.	Part Name	Qty	Options
	37B-1HP-5030	SHROUD ASSEMBLY	1	SN: 300001-UP
1	3EB-04-52111	• SHROUD	1	SN: 300001-UP
2	3EB-04-51190	• LINK	1	SN: 300001-UP
3	01010-80820	BOLT	2	SN: 300001-UP
	01643-30823	WASHER	2	SN: 300001-UP
4	34A-42-41130	WASHER	2	SN: 300001-UP
5	3EB-04-42140	RUBBER	2	SN: 300001-UP
	3EB-04-62120	HOSE ASSEMBLY	1	SN: 300001-UP
6	3EB-04-52120	• HOSE	1	SN: 300001-UP
7	08210-02903	• SPIRAL TUBE	1	SN: 300001-UP
8	3EB-04-52130	HOSE ASSEMBLY	1	SN: 300001-UP
9	37B-1FH-3020	CLAMP	2	SN: 300001-UP
10	37B-1FH-3010	CLAMP	2	SN: 300001-UP
11	3EB-04-51180SG	WASHER	2	SN: 300001-UP
12	01010-B0616	BOLT	2	SN: 300001-UP
13	01643-30623	WASHER	2	SN: 300001-UP

Reference: C4130-01A0

Open this exact parts catalogue on K-Part

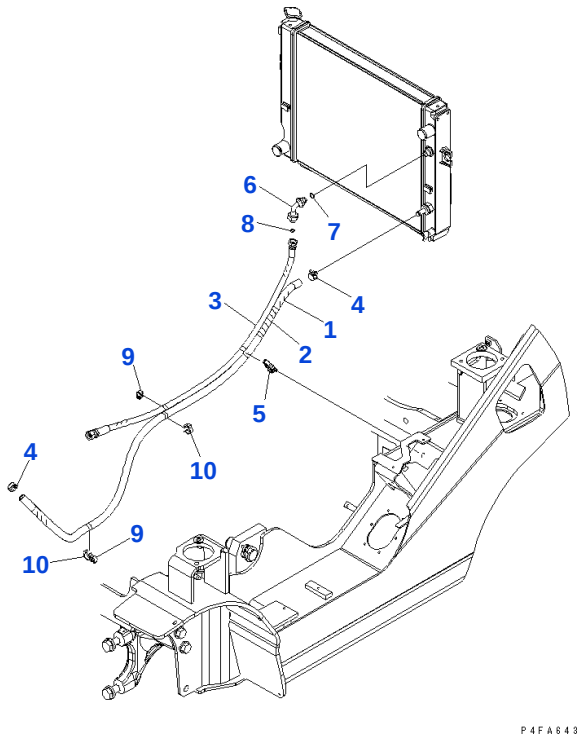

Reference: C4140-01A0

090040 TORQUE CONVERTER COOLER PIPING

Item	Part No.	Part Name	Qty	Options
	3EB-04-68240	HOSE ASSEMBLY	1	SN: 300001-UP
1	3EB-04-68140	• HOSE	1	SN: 300001-UP
2	08210-01801	• SPIRAL TUBE	1	SN: 300001-UP
3	3EB-04-68130	HOSE	1	SN: 300001-UP
4	07281-00229	CLAMP	2	SN: 300001-UP
5	3EB-04-44190	CLAMP	2	SN: 300001-UP
6	3EB-04-48110	PIPE ASSEMBLY	1	SN: 300001-UP
7	3EB-04-48140	O-RING	1	SN: 300001-UP
8	02896-21009	O-RING	1	SN: 300001-UP
9	37F-1PC-2190	CLAMP	2	SN: 300001-UP
10	37F-1PC-2380	CLAMP	2	SN: 300001-UP

Reference: C4140-01A0

Open this exact parts catalogue on K-Part

Get the complete PDF catalogue

Komatsu FD20-17 (JPN) Diesel Engine Forklift S/N 300001-308844 (Japanese)

$89

with PayPal | Store cart: $99

Buy this PDF on Manuals Komatsu

Check the model, serial range and language before payment.

Download instructions are emailed after payment confirmation.

This free sample contains 10 catalogue pages.