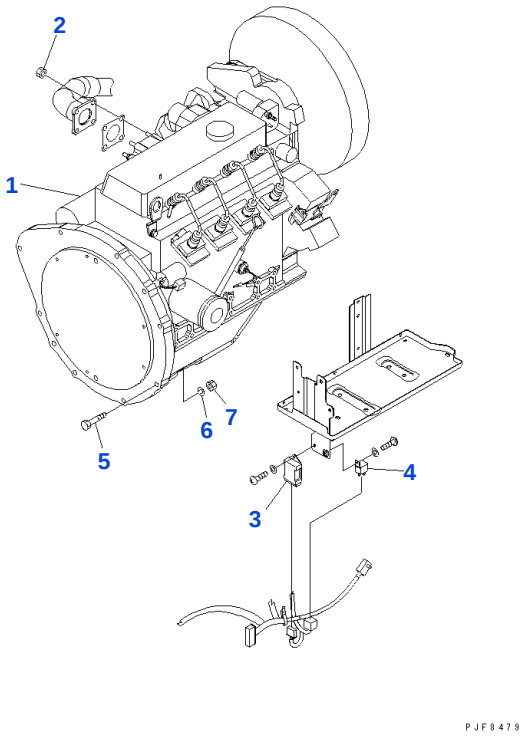

Reference: A4110-01A0

030010 ENGINE UNIT AND POWER TRAIN RELATED PARTS

Item	Part No.	Part Name	Qty	Options
	37A-1DD-3111	ENGINE 4LB1	1	SN: 644398-UP
	37A-1DD-3110	ENGINE, 4LB1	1	SN: 640001-644397
1	37A-1DD-3210	• ENGINE, 4LB1	1	SN: 640001-UP
2	3EB-02-31920	• NAT	4	SN: 640001-UP
3	3EB-02-31431	• TIMER, QOS	1	SN: 640001-UP
4	3EB-02-31440	• RELAY,QOS	1	SN: 640001-UP
5	01010-81050	BOLT	8	SN: 640001-UP
6	01602-21030	WASHER	8	SN: 640001-UP
7	01580-11008	NAT	8	SN: 640001-UP

Reference: A4110-01A0

Open this exact parts catalogue on K-Part

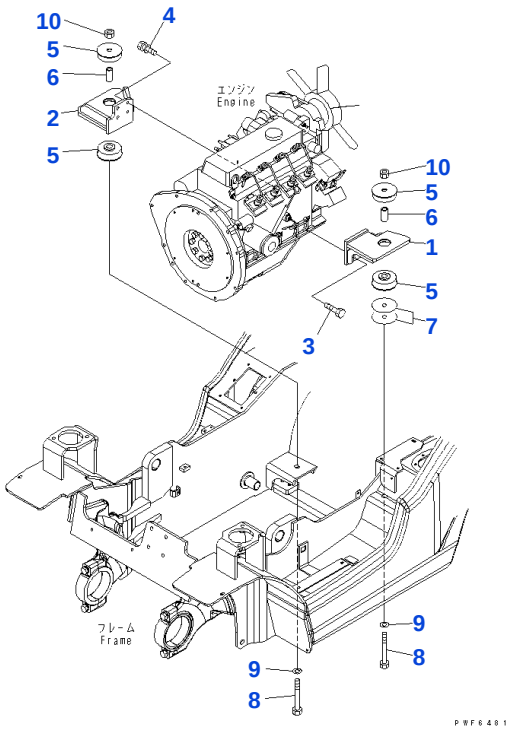

Reference: A4120-01A0

030020 ENGINE MOUNTING PARTS

Item	Part No.	Part Name	Qty	Options
1	3EA-02-44110SA	BRACKET, LEFT	1	SN: 640001-UP
2	3EA-02-44122SA	BRACKET, RIGHT	1	SN: 640001-UP
3	01010-81030	BOLT	4	SN: 640001-UP
	01643-31032	WASHER	4	SN: 640001-UP
4	01010-81030	BOLT	4	SN: 640001-UP
	01643-31032	WASHER	4	SN: 640001-UP
5	3EB-01-31640	RUBBER	4	SN: 640001-UP
6	3EB-01-41680	COLLAR	2	SN: 640001-UP
7	3EB-01-31560	SHIM, 1.0MM	3	SN: 640001-UP
8	01011-81405	BOLT	2	SN: 640001-UP
9	01643-31445	WASHER	2	SN: 640001-UP
10	3EB-50-13180	U NUT	2	SN: 640001-UP

Reference: A4120-01A0

Open this exact parts catalogue on K-Part

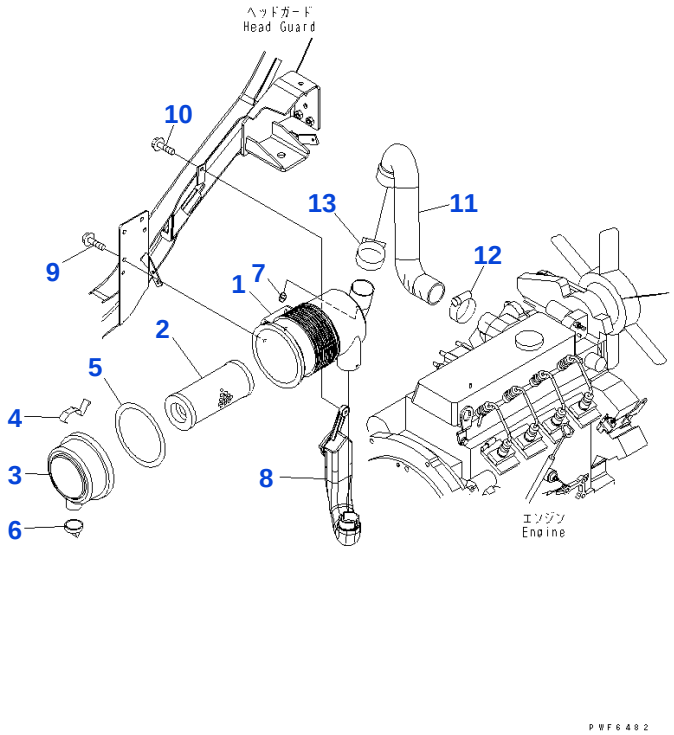

Reference: A4140-01A0

030030 AIR INTAKE CONNECTION

Item	Part No.	Part Name	Qty	Options
	3EB-01-41710	AIR CLEANER ASSEMBLY	1	SN: 640001-UP
1	3EB-01-48720	• BODY ASSEMBLY	1	SN: 640001-UP
2	3EB-01-38730	• ELEMENT ASSEMBLY	1	SN: 640001-UP
3	3EB-01-48740	• COVER	1	SN: 640001-UP
4	3EB-01-48750	• LATCH	2	SN: 640001-UP
5	3EB-01-48760	• GASKET	1	SN: 640001-UP
6	3EB-02-44770	• VALVE, VACUATOR	1	SN: 640001-UP
7	3EB-02-34780	• CAP, NIPPLE	1	SN: 640001-UP
8	3EB-01-41741	HOSE	1	SN: 640001-UP
9	01010-80816	BOLT	2	SN: 645218-UP
	01643-30823	WASHER	2	SN: 645218-UP
	F1210-40816	☐ BOLT	2	SN: 640001-645217
10	F1210-40616	BOLT	1	SN: 640001-UP
11	3EA-02-45110	HOSE	1	SN: 640001-UP
12	07281-00609	CLAMP	1	SN: 640001-UP
13	07281-00609	CLAMP	1	SN: 640001-UP

Catalog signs: ☐ part above may be used instead

Reference: A4140-01A0

Open this exact parts catalogue on K-Part

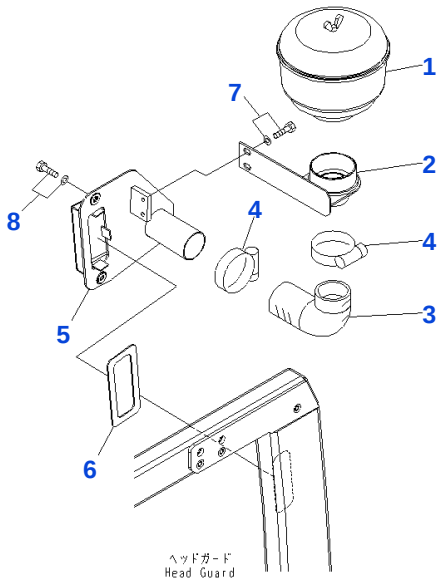

Reference: A4140-02P0

030040 BUILT-IN PRE-CLEANER

Item	Part No.	Part Name	Qty	Options
1	3EC-01-33310	PULLEY CLEANER	1	SN: 640001-UP
2	3EB-01-47710YY	BRACKET	1	SN: 640001-UP
3	3EB-02-14830	HOSE	1	SN: 640001-UP
4	07281-00709	CLAMP	2	SN: 640001-UP
5	3EB-01-47720YY	BRACKET	1	SN: 640001-UP
6	3EB-01-47730	GASKET	1	SN: 640001-UP
7	01010-80816	BOLT	2	SN: 640001-UP
	01643-30823	WASHER	2	SN: 640001-UP
8	01010-80820	BOLT	2	SN: 640001-UP
	01643-30823	WASHER	2	SN: 640001-UP

Reference: A4140-02P0

Open this exact parts catalogue on K-Part

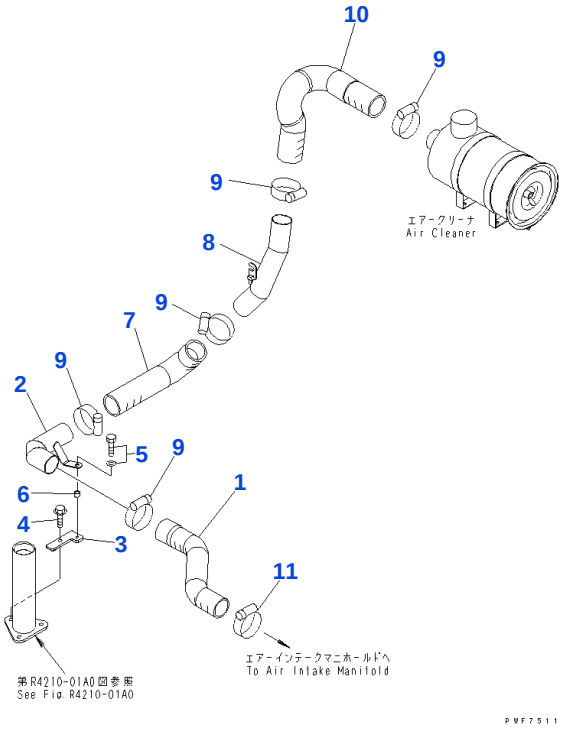

Reference: A4140-11P0

030050 OUTER MOUNTED TYPE PRE-CLEANER AND RAIN CAP (1/2)

Item	Part No.	Part Name	Qty	Options
1	3EA-02-46310	HOSE	1	SN: 640001-UP
2	3EB-01-46540SA	PIPE	1	SN: 640001-UP
3	3EB-01-46550SA	BRACKET	1	SN: 640001-UP
4	F1110-40825	BOLT	1	SN: 640001-UP
5	01010-80825	BOLT	1	SN: 640001-UP
	01643-30823	WASHER	1	SN: 640001-UP
6	3EB-01-46630SA	SPACER	1	SN: 640001-UP
7	3EB-01-46530	HOSE	1	SN: 640001-UP
8	3EA-01-46620SA	PIPE	1	SN: 640001-UP
9	07281-00709	CLAMP	5	SN: 640001-UP
10	3EA-01-46610	HOSE	1	SN: 640001-UP
11	07281-00609	CLAMP	1	SN: 640001-UP

Reference: A4140-11P0

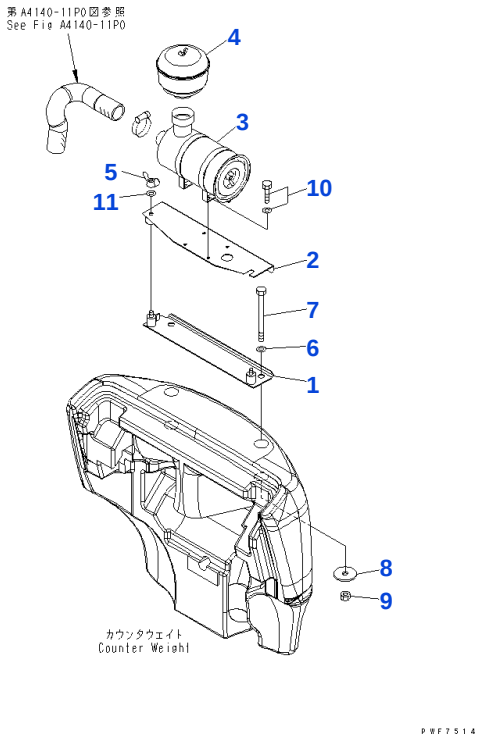

Reference: A4140-12P0

030060 OUTER PRE-CLEANER (2/2)

Item	Part No.	Part Name	Qty	Options
1	3EB-02-47510YL	BRACKET	1	SN: 640001-UP
2	3EA-01-32120YL	BRACKET	1	SN: 640001-UP
3	3EA-01-32210	AIR CLEANER ASSEMBLY	1	SN: 640001-UP
4	3EC-01-33310	PULLEY CLEANER	1	SN: 640001-UP
5	01541-21260	NAT	2	SN: 640001-UP
6	01640-22032	WASHER	2	SN: 640001-UP
7	3EC-05-32930	BOLT	2	SN: 640001-UP
8	3EB-05-13330	WASHER	2	SN: 640001-UP
9	01580-12016	NAT	2	SN: 640001-UP
10	01010-80816	BOLT	4	SN: 640001-UP
	01643-30823	WASHER	4	SN: 640001-UP
11	01643-31232	WASHER	2	SN: 640001-UP

Reference: A4140-12P0

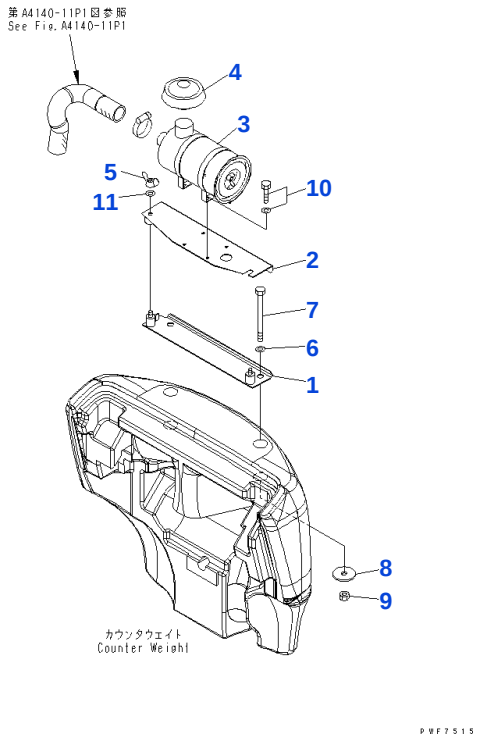

Reference: A4140-12P1

030070 EXTERNAL RAIN CAP (2/2)

Item	Part No.	Part Name	Qty	Options
1	3EB-02-47510YL	BRACKET	1	SN: 640001-UP
2	3EA-01-32120YL	BRACKET	1	SN: 640001-UP
3	3EB-02-29610	AIR CLEANER ASSEMBLY	1	SN: 640001-UP
4	3EB-02-35410	RAIN CAP	1	SN: 640001-UP
5	01541-21260	NAT	2	SN: 640001-UP
6	01640-22032	WASHER	2	SN: 640001-UP
7	3EC-05-32930	BOLT	2	SN: 640001-UP
8	3EB-05-13330	WASHER	2	SN: 640001-UP
9	01580-12016	NAT	2	SN: 640001-UP
10	01010-80816	BOLT	4	SN: 640001-UP
	01643-30823	WASHER	4	SN: 640001-UP
11	01643-31232	WASHER	2	SN: 640001-UP

Reference: A4140-12P1

Open this exact parts catalogue on K-Part

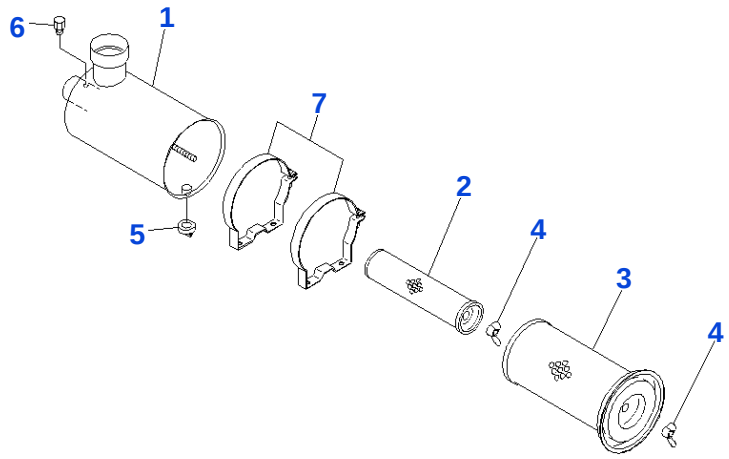

Reference: A4140-13P0

030080 AIR CLEANER (INNER PARTS) (DRY TYPE, PRE CLEANER TYPE)

Item	Part No.	Part Name	Qty	Options
	3EA-01-32210	AIR CLEANER ASSEMBLY	1	SN: 640001-UP
1	3EA-01-32220	• BODY ASSEMBLY	1	SN: 640001-UP
2	3EB-02-25550	• ELEMENT ASSEMBLY, INNER	1	SN: 640001-UP
3	3EC-01-11630	• ELEMENT ASSEMBLY,OUTER	1	SN: 640001-UP
4	34B-02-31650	• NUT ASSEMBLY, WING	2	SN: 640001-UP
5	3EA-01-17150	• VALVE	1	SN: 640001-UP
6	3EB-02-29490	• CAP	1	SN: 640001-UP
7	3EB-02-25830	• BAND	2	SN: 640001-UP

Reference: A4140-13P0

Open this exact parts catalogue on K-Part

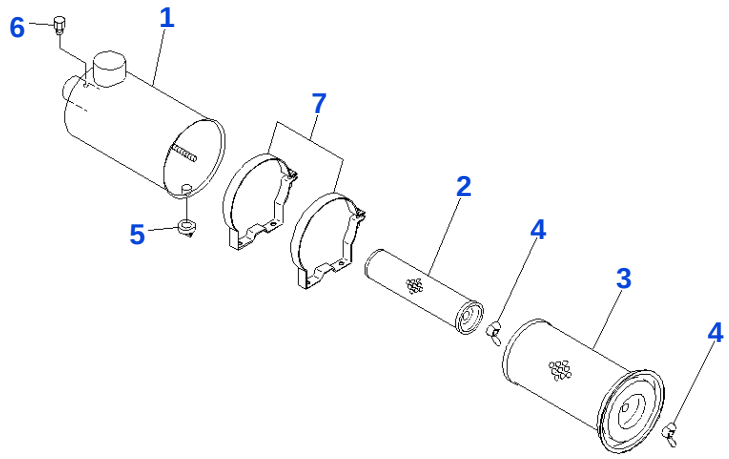

Reference: A4140-13P1

030090 AIR CLEANER (INNER PARTS) (OUTER TYPE, FOR RAIN CAP)

Item	Part No.	Part Name	Qty	Options
	3EB-02-29610	AIR CLEANER ASSEMBLY	1	SN: 640001-UP
1		• ☆ BODY ASSEMBLY	1	SN: 640001-UP
2	3EB-02-25550	• ELEMENT ASSEMBLY, INNER	1	SN: 640001-UP
3	3EC-01-11630	• ELEMENT ASSEMBLY,OUTER	1	SN: 640001-UP
4	34B-02-31650	• NUT ASSEMBLY, WING	1	SN: 640001-UP
5	3EA-01-17150	• VALVE	1	SN: 640001-UP
6	3EB-02-29490	• CAP	1	SN: 640001-UP
7	3EB-02-25830	• BAND	2	SN: 640001-UP

Catalog signs: ☆ not supplied separately: assembly only

Reference: A4140-13P1

Open this exact parts catalogue on K-Part

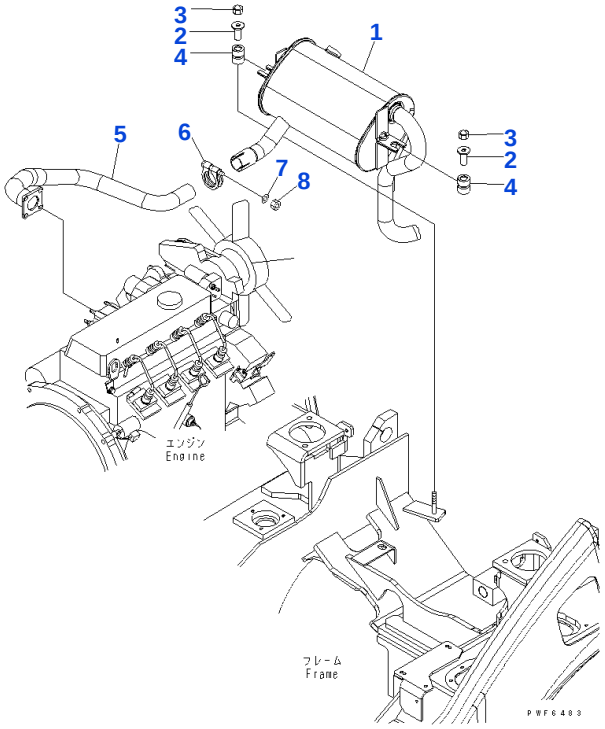

Reference: B4110-01A0

060010 MUFFLER AND EXHAUST CONNECTION

Item	Part No.	Part Name	Qty	Options
1	3EB-03-45110	MUFFLER	1	SN: 640001-UP
2	3EB-03-41130	COLLAR	2	SN: 640001-UP
3	01596-01009	NAT	2	SN: 640001-UP
4	3EB-03-41120	RUBBER	2	SN: 640001-UP
5	3EA-03-44110	PIPE	1	SN: 640001-UP
6	3EB-03-31530	CLAMP	1	SN: 640001-UP
7	01643-31032	WASHER	1	SN: 640001-UP
8	01582-11008	NAT	1	SN: 640001-UP

Reference: B4110-01A0

Open this exact parts catalogue on K-Part

Get the complete PDF catalogue

Komatsu FD18L-18 (JPN) Diesel Engine Forklift S/N 640001-650000 (Japanese)

$89

with PayPal | Store cart: $99

Buy this PDF on Manuals Komatsu

Check the model, serial range and language before payment.

Download instructions are emailed after payment confirmation.

This free sample contains 10 catalogue pages.