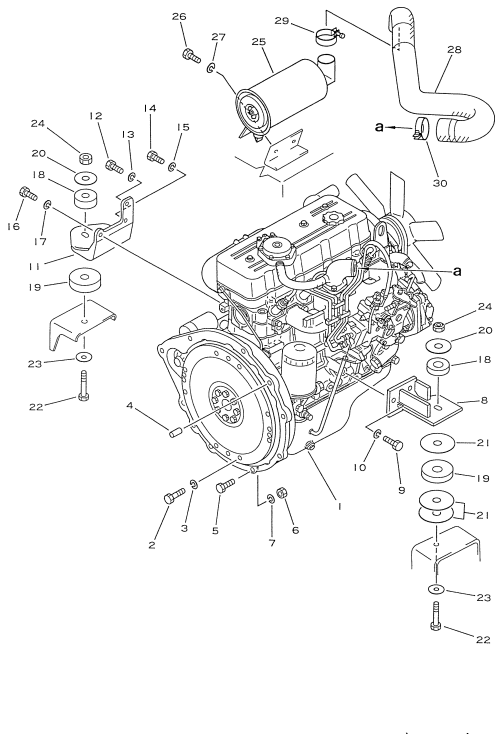


Reference: 1051

# 030010 ENGINE INSTALLATION PARTS(#250001-350000)

| Item | Part No. | Part Name | Qty | Options |
|---|---|---|---|---|
| 1 | 37A-1DC-2010 | ENGINE, (FOR DRY CLUTCH) | 1 | SN: 250001-350000 |
| | 37A-1DC-2030 | ENGINE, (FOR TORQUE CONVERTER) | 1 | SN: 250001-350000 |
| 2 | 01010-50816 | BOLT, (FOR TORQUE CONVERTER) | 8 | SN: 250001-350000 |
| 3 | 01602-20825 | WASHER, SPRING (FOR TORQUE CONVERTER) | 8 | SN: 250001-350000 |
| 4 | 04020-01228 | PIN, DOWEL | 2 | SN: 250001-350000 |
| 5 | 01010-51045 | BOLT, (FOR TORQUE CONVERTER) | 8 | SN: 250001-350000 |
| 6 | 01580-11008 | NUT, (FOR TORQUE CONVERTER) | 8 | SN: 250001-350000 |
| 7 | 01602-21030 | WASHER, SPRING (FOR TORQUE CONVERTER) | 8 | SN: 250001-350000 |
| 8 | 3EB-02-27110 | BRACKET, LEFT | 1 | SN: 250001-350000 |
| 9 | 37A-101-2010 | BOLT | 3 | SN: 250001-350000 |
| 10 | 01602-21236 | WASHER, SPRING | 3 | SN: 250001-350000 |
| 11 | 3EB-02-27120 | BRACKET, RIGHT | 1 | SN: 250001-350000 |
| 12 | 01050-51030 | BOLT | 1 | SN: 250001-350000 |
| 13 | 01602-21030 | WASHER, SPRING | 1 | SN: 250001-350000 |
| 14 | 01050-51430 | BOLT | 1 | SN: 250001-350000 |
| 15 | 01602-21442 | WASHER, SPRING | 1 | SN: 250001-350000 |
| 16 | 37A-101-2010 | BOLT | 1 | SN: 250001-350000 |
| 17 | 01602-21236 | WASHER, SPRING | 1 | SN: 250001-350000 |
| 18 | 3EB-01-27140 | RUBBER | 2 | SN: 250001-350000 |
| 19 | 3EB-01-27130 | RUBBER | 2 | SN: 250001-350000 |
| 20 | 304-01-31150 | PLATE | 2 | SN: 250001-350000 |
| 21 | 304-01-31160 | SHIM, 1.0MM | 3 | SN: 250001-350000 |
| 22 | 01010-51685 | BOLT | 2 | SN: 250001-350000 |
| 23 | 01643-31645 | WASHER | 2 | SN: 250001-350000 |
| 24 | 34B-01-15150 | NAT | 2 | SN: 250001-350000 |
| 25 | 3EA-01-25710 | AIR CLEANER ASSEMBLY | 1 | SN: 250001-350000 |
| 26 | 01010-50812 | BOLT | 2 | SN: 250001-350000 |
| 27 | 01602-20825 | WASHER, SPRING | 2 | SN: 250001-350000 |
| 28 | 3EA-02-25810 | HOSE | 1 | SN: 250001-350000 |
| 29 | 07280-05429 | CLAMP | 1 | SN: 250001-350000 |
| 30 | 07280-06429 | CLAMP | 1 | SN: 250001-350000 |

Reference: 1051

Open this exact parts catalogue on K-Part

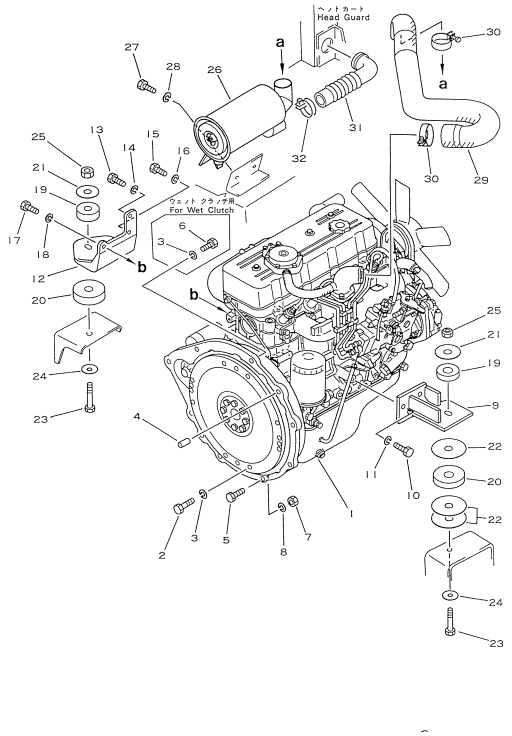


Reference: 1051A

# 030020 ENGINE MOUNTING PARTS (#350001-)

| Item | Part No. | Part Name | Qty | Options |
|---|---|---|---|---|
| 1 | 37A-1DC-2010 | ENGINE, (FOR DRY CLUTCH) | 1 | SN: 350001-UP |
| | 37A-1DC-2030 | ENGINE, (FOR TORQUE CONVERTER) | 1 | SN: 350001-UP |
| 2 | 01010-50816 | BOLT, (FOR TORQUE CONVERTER) | 8 | SN: 350001-UP |
| 3 | 01602-20825 | WASHER, SPRING (FOR TORQUE CONVERTER) | 8 | SN: 350001-UP |
| 4 | 04020-01228 | PIN, DOWEL (FOR TORQUE CONVERTER) | 2 | SN: 350001-UP |
| 5 | 01010-51045 | BOLT, (FOR TORQUE CONVERTER) | 8 | SN: 350001-UP |
| 7 | 01580-11008 | NUT, (FOR TORQUE CONVERTER) | 8 | SN: 350001-UP |
| 8 | 01602-21030 | WASHER, SPRING (FOR TORQUE CONVERTER) | 8 | SN: 350001-UP |
| 9 | 3EB-02-27110 | BRACKET, LEFT | 1 | SN: 350001-UP |
| 10 | 37A-101-2010 | BOLT | 3 | SN: 350001-UP |
| 11 | 01602-21236 | WASHER, SPRING | 3 | SN: 350001-UP |
| 12 | 3EB-02-27120 | BRACKET, RIGHT | 1 | SN: 350001-UP |
| 13 | 01050-51030 | BOLT | 1 | SN: 350001-UP |
| 14 | 01602-21030 | WASHER, SPRING | 1 | SN: 350001-UP |
| 15 | 01050-51430 | BOLT | 1 | SN: 350001-UP |
| 16 | 01602-21442 | WASHER, SPRING | 1 | SN: 350001-UP |
| 17 | 37A-101-2010 | BOLT | 1 | SN: 350001-UP |
| 18 | 01602-21236 | WASHER, SPRING | 1 | SN: 350001-UP |
| 19 | 3EB-01-27140 | RUBBER | 2 | SN: 350001-UP |
| 20 | 3EB-01-27130 | RUBBER | 2 | SN: 350001-UP |
| 21 | 304-01-31150 | PLATE | 2 | SN: 350001-UP |
| 22 | 304-01-31160 | SHIM, 1.0MM | 3 | SN: 350001-UP |
| 23 | 01010-51685 | BOLT | 2 | SN: 350001-UP |
| 24 | 01643-31645 | WASHER | 2 | SN: 350001-UP |
| 25 | 34B-01-15150 | NAT | 2 | SN: 350001-UP |
| 26 | 37B-1CE-2030 | AIR CLEANER ASSEMBLY | 1 | SN: 350001-UP |
| 27 | 01010-50812 | BOLT | 2 | SN: 350001-UP |
| 28 | 01602-20825 | WASHER, SPRING | 2 | SN: 350001-UP |
| 29 | 3EA-02-26610 | HOSE | 1 | SN: 350001-UP |
| 30 | 07280-06429 | CLAMP | 2 | SN: 350001-UP |
| 31 | 3EA-02-25240 | HOSE | 1 | SN: 350001-UP |
| 32 | 07280-06429 | CLAMP | 1 | SN: 350001-UP |

Open this exact parts catalogue on K-Part

Open this exact parts catalogue on K-Part

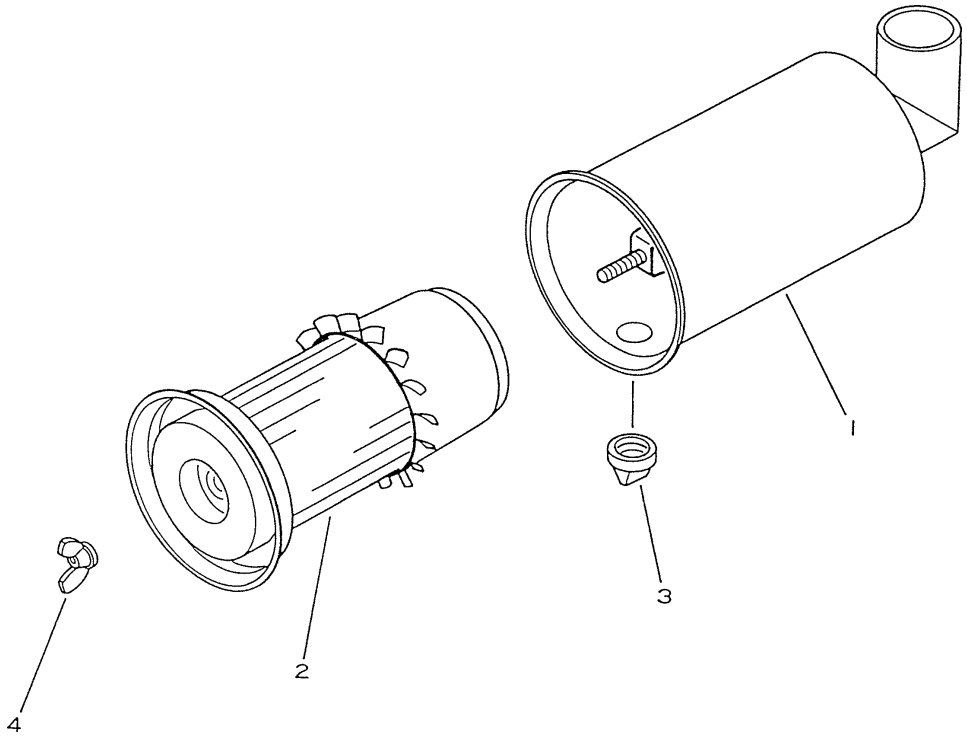


Reference: 1101

# 030030 AIR CLEANER (#250001-350000)

| Item | Part No. | Part Name | Qty | Options |
|---|---|---|---|---|
| | 3EA-01-25710 | AIR CLEANER ASSEMBLY | 1 | SN: 250001-350000 |
| 1 | 3EA-01-25720 | • BODY ASSEMBLY | 1 | SN: 250001-350000 |
| 2 | 3EA-01-17130 | • ELEMENT ASSEMBLY | 1 | SN: 250001-350000 |
| 3 | 3EA-01-17150 | • VALVE, VACUUM | 1 | SN: 250001-350000 |
| 4 | 3EA-01-17140 | • NUT,WING | 1 | SN: 250001-350000 |

Reference: 1101

Open this exact parts catalogue on K-Part

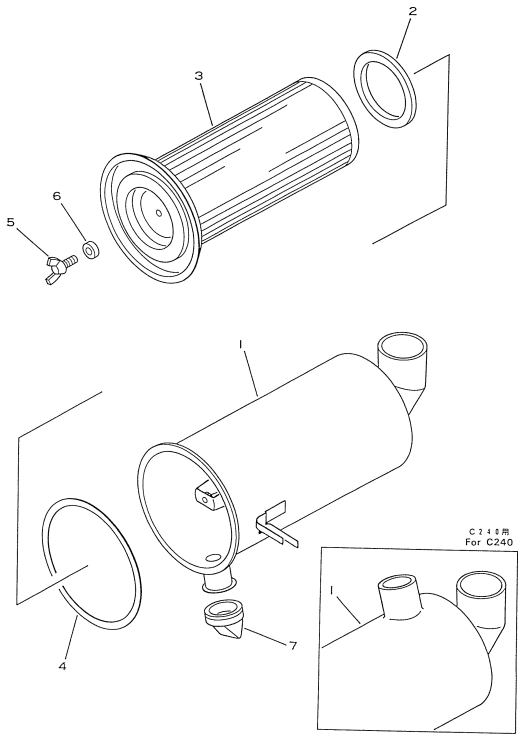


Reference: 1171

# 030040 AIR CLEANER(#350001-)

| Item | Part No. | Part Name | Qty | Options |
|---|---|---|---|---|
| | 37B-1CE-2030 | AIR CLEANER ASSEMBLY | 1 | SN: 350001-UP |
| 1 | 3EB-01-25810 | • BODY ASSEMBLY | 1 | SN: 350001-UP |
| 2 | 3EB-01-25840 | • PACKING | 1 | SN: 350001-UP |
| 3 | 3EB-01-25830 | • ELEMENT ASSEMBLY | 1 | SN: 350001-UP |
| 4 | 3EB-01-25860 | • PACKING | 1 | SN: 350001-UP |
| 5 | 3EB-01-25880 | • BOLT,WING | 1 | SN: 350001-UP |
| 6 | 3EB-01-25870 | • COLLAR | 1 | SN: 350001-UP |
| 7 | 3EB-01-25850 | • VALVE, VACUUM | 1 | SN: 350001-UP |

Reference: 1171

Open this exact parts catalogue on K-Part

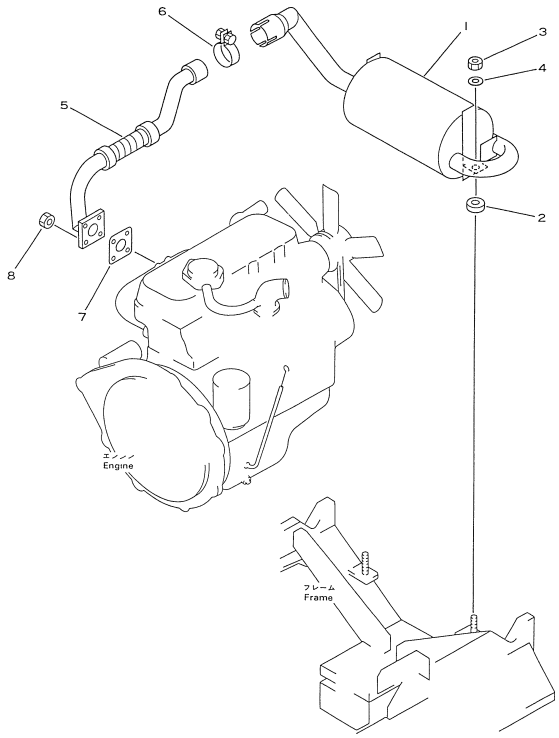


Reference: 1251

# 030050 EXHAUST SYSTEM

| Item | Part No. | Part Name | Qty | Options |
|---|---|---|---|---|
| 1 | 3EA-03-21111 | MUFFLER | 1 | SN: 250001-UP |
| 2 | 3EA-03-11120 | RUBBER | 2 | SN: 250001-UP |
| 3 | 01598-10809 | NAT | 2 | SN: 250001-UP |
| 4 | 34A-50-22140 | WASHER | 2 | SN: 250001-UP |
| 5 | 3EA-03-21710 | PIPE | 1 | SN: 250001-UP |
| 6 | 3EB-03-22151 | CLAMP SUB ASSEMBLY | 1 | SN: 250001-UP |
| | 01010-50830 | • BOLT | 1 | SN: 250001-UP |
| | 01602-20825 | • WASHER, SPRING | 1 | SN: 250001-UP |
| 7 | 9-14145-802-0 | GASKET | 1 | SN: 250001-UP |
| 8 | 9-09110-408-0 | NAT | 4 | SN: 250001-UP |

Reference: 1251

Open this exact parts catalogue on K-Part

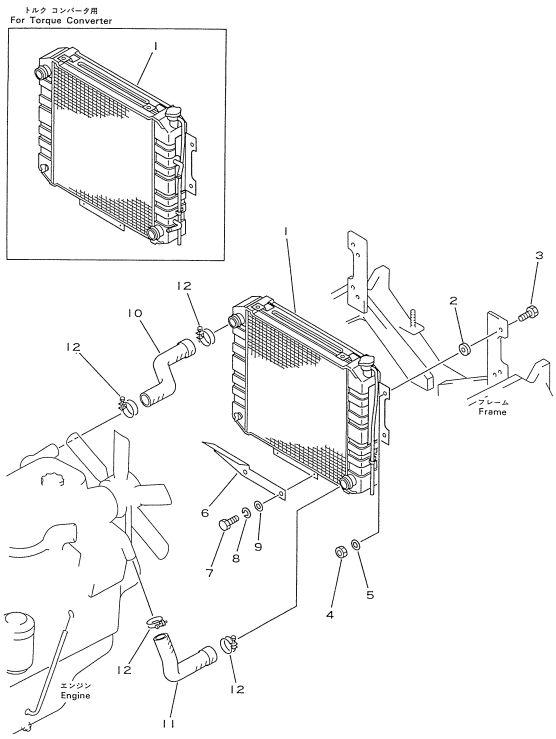


Reference: 1351

# 030060 RADIATOR

| Item | Part No. | Part Name | Qty | Options |
|---|---|---|---|---|
| 1 | 37A-1CH-2010 | RADIATOR ASSEMBLY, (FOR CLUTCH) | 1 | SN: 250001-UP |
| | 37A-1CG-2010 | RADIATOR ASSEMBLY, (FOR TORQUE CONVERTER) | 1 | SN: 250001-UP |
| | 3EB-04-21130 | • CAP | 1 | SN: 250001-UP |
| | 34B-04-11240 | • VALVE, DRAIN | 1 | SN: 250001-UP |
| | 34B-04-11250 | • PACKING | 1 | SN: 250001-UP |
| 2 | 34B-04-15220 | RUBBER | 4 | SN: 250001-UP |
| 3 | 01010-50835 | BOLT | 4 | SN: 250001-UP |
| 4 | 01598-10809 | NAT | 4 | SN: 250001-UP |
| 5 | 01642-20810 | WASHER | 4 | SN: 250001-UP |
| 6 | 3EA-04-25180 | COVER | 1 | SN: 250001-UP |
| 7 | 01010-50816 | BOLT | 2 | SN: 250001-UP |
| 8 | 01602-20825 | WASHER, SPRING | 2 | SN: 250001-UP |
| 9 | 01642-20810 | WASHER | 2 | SN: 250001-UP |
| 10 | 3EA-04-22310 | HOSE | 1 | SN: 250001-UP |
| 11 | 3EA-04-22320 | HOSE | 1 | SN: 250001-UP |
| 12 | 07280-04126 | CLAMP | 4 | SN: 250001-UP |

Reference: 1351

Open this exact parts catalogue on K-Part

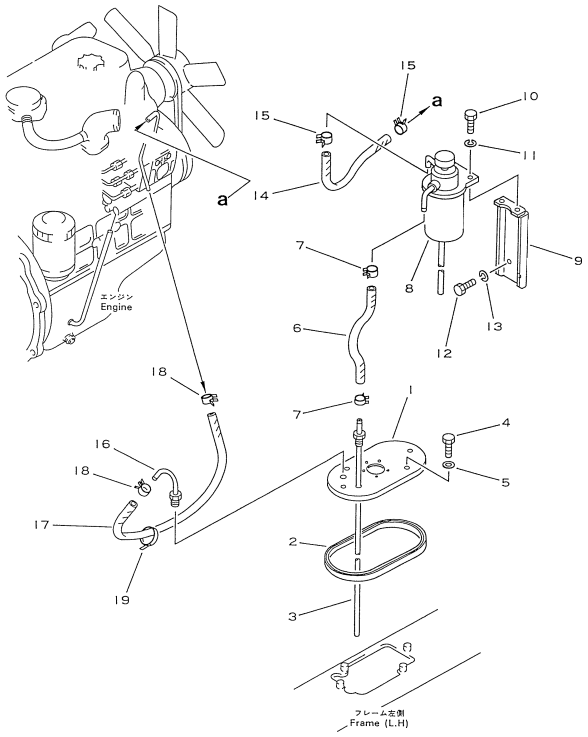


Reference: 1451

# 030070 FUEL SYSTEM(#250001-350000)

| Item | Part No. | Part Name | Qty | Options |
|---|---|---|---|---|
| 1 | 37B-1CT-2020 | COVER | 1 | SN: 250001-350000 |
| 2 | 3EB-05-21130 | PACKING | 1 | SN: 250001-350000 |
| 3 | 3EA-05-21340 | PIPE | 1 | SN: 250001-350000 |
| 4 | 01010-50816 | BOLT | 4 | SN: 250001-350000 |
| 5 | 07005-00812 | GASKET | 4 | SN: 250001-350000 |
| 6 | 37B-1FA-1310 | HOSE | 1 | SN: 250001-350000 |
| 7 | 07285-00130 | CLIP | 2 | SN: 250001-350000 |
| 8 | 8-94412-705-2 | FILTER ASSEMBLY | 1 | SN: 250001-350000 |
| 9 | 3EA-05-21330 | BRACKET | 1 | SN: 250001-350000 |
| 10 | 01010-50620 | BOLT | 2 | SN: 250001-350000 |
| 11 | 01602-20619 | WASHER, SPRING | 2 | SN: 250001-350000 |
| 12 | 01010-50820 | BOLT | 2 | SN: 250001-350000 |
| 13 | 01602-20825 | WASHER, SPRING | 2 | SN: 250001-350000 |
| 14 | 37B-1FA-1270 | HOSE | 1 | SN: 250001-350000 |
| 15 | 07285-00130 | CLIP | 2 | SN: 250001-350000 |
| 16 | 3EB-05-21430 | PIPE | 1 | SN: 250001-350000 |
| 17 | 37B-1FA-1020 | HOSE, 370MM | 1 | SN: 250001-350000 |
| 18 | 07285-00125 | CLIP | 2 | SN: 250001-350000 |
| 19 | 37B-1AE-6010 | BAND | 4 | SN: 250001-350000 |

Reference: 1451

Open this exact parts catalogue on K-Part

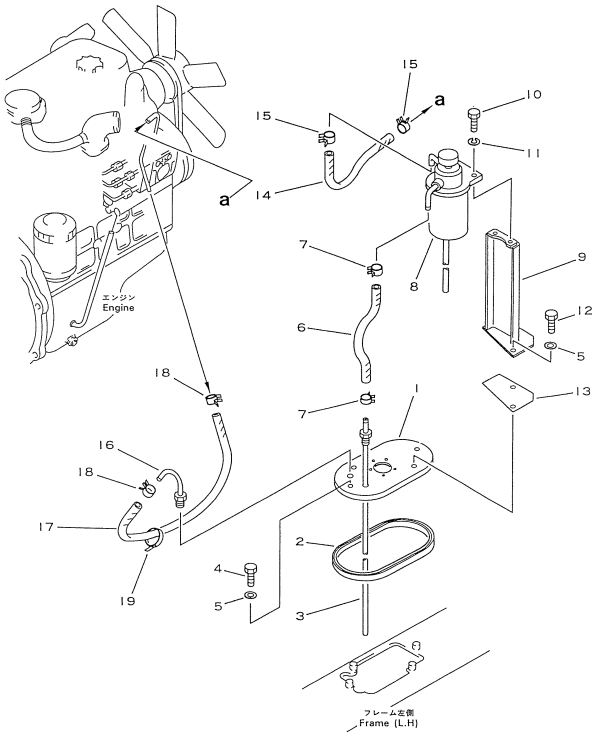


Reference: 1451A

# 030080 FUEL SYSTEM (#350001-)

| Item | Part No. | Part Name | Qty | Options |
|---|---|---|---|---|
| 1 | 37B-1CT-2020 | COVER | 1 | SN: 350001-UP |
| 2 | 3EB-05-21130 | PACKING | 1 | SN: 350001-UP |
| 3 | 3EA-05-21340 | PIPE | 1 | SN: 350001-UP |
| 4 | 01010-50816 | BOLT | 2 | SN: 350001-UP |
| 5 | 07005-00812 | GASKET | 4 | SN: 350001-UP |
| 6 | 37B-1FA-1260 | HOSE | 1 | SN: 350001-UP |
| 7 | 07285-00130 | CLIP | 2 | SN: 350001-UP |
| 8 | 8-94412-705-2 | FILTER ASSEMBLY | 1 | SN: 350001-UP |
| 9 | 3EB-05-21510 | BRACKET | 1 | SN: 350001-UP |
| 10 | 01010-50625 | BOLT | 2 | SN: 350001-UP |
| 11 | 01602-20619 | WASHER, SPRING | 2 | SN: 350001-UP |
| 12 | 01010-50820 | BOLT | 2 | SN: 350001-UP |
| 13 | 3EB-05-21470 | RUBBER | 1 | SN: 350001-UP |
| 14 | 37B-1FA-1270 | HOSE | 1 | SN: 350001-UP |
| 15 | 07285-00130 | CLIP | 2 | SN: 350001-UP |
| 16 | 3EB-05-21430 | PIPE | 1 | SN: 350001-UP |
| 17 | 37B-1FA-1020 | HOSE, 370MM | 1 | SN: 350001-UP |
| 18 | 07285-00125 | CLIP | 2 | SN: 350001-UP |
| 19 | 37B-1AE-6010 | BAND | 4 | SN: 350001-UP |

Reference: 1451A

Open this exact parts catalogue on K-Part

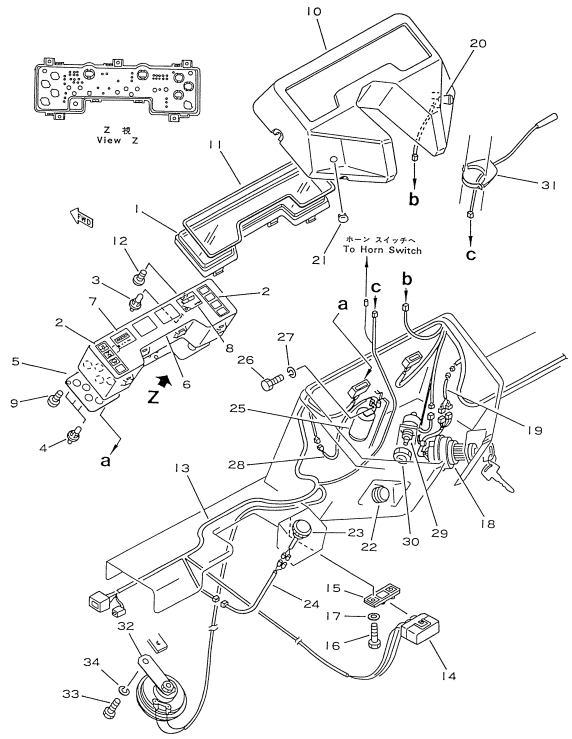


Reference: 1601

# 030090 ELECTRICAL SYSTEM (1/3)(#250001-250004)

| Item | Part No. | Part Name | Qty | Options |
|---|---|---|---|---|
| 1 | 37B-1CP-2200 | PANEL ASSEMBLY, METER | 1 | SN: 250001-250004 |
| | 37B-1CP-2210 | • PANEL ASSEMBLY | 1 | SN: 250001-250004 |
| | 3EB-50-23520 | • • PLATE | 1 | SN: 250001-250004 |
| 2 | 3EB-50-23530 | • • LENS KIT | 1 | SN: 250001-250004 |
| 3 | 3EB-50-23560 | • • BULB, 3.4W, FUEL GAUGE | 2 | SN: 250001-250004 |
| 4 | 3EB-50-23580 | • • BULB, 3.4W, SAFETY CHECKER | 3 | SN: 250001-250004 |
| 5 | 3EB-50-23550 | • • PLATE ASSEMBLY | 1 | SN: 250001-250004 |
| 6 | 3EB-50-23510 | • • PANEL | 1 | SN: 250001-250004 |
| 8 | 3EB-50-23650 | • • GAUGE, FUEL | 1 | SN: 250001-250004 |
| 9 | 3EB-50-23590 | • • SCREW | 3 | SN: 250001-250004 |
| 10 | 3EB-50-23510 | • PANEL | 1 | SN: 250001-250004 |
| 11 | 3EB-50-23540 | • PACKING | 1 | SN: 250001-250004 |
| 12 | 3EB-50-23570 | • SCREW | 5 | SN: 250001-250004 |
| 13 | 3EA-55-21111 | WIRING HARNESS | 1 | SN: 250001-250004 |
| 14 | 3EB-55-21210 | • BOX ASSEMBLY, FUSE | 1 | SN: 250001-250004 |
| | 3EB-55-21260 | • • FUSE, 10A | 5 | SN: 250001-250004 |
| | 3EB-55-21270 | • • FUSE, 15A | 1 | SN: 250001-250004 |
| 15 | 3EB-55-21250 | BRACKET | 1 | SN: 250001-250004 |
| 16 | 01220-40612 | SCREW | 2 | SN: 250001-250004 |
| 17 | 01642-20608 | WASHER | 2 | SN: 250001-250004 |
| 18 | 3EB-55-21161 | SWITCH, STARTER | 1 | SN: 250001-250004 |
| | 3EB-55-11580 | • KEY | 2 | SN: 250001-250004 |
| 19 | 3EB-55-22690 | CABLE | 1 | SN: 250001-250004 |
| 20 | 34C-55-12410 | SWITCH,LAMP | 1 | SN: 250001-250004 |
| 21 | 3EB-50-21150 | CLIP | 1 | SN: 250001-250004 |
| 22 | 34A-55-24471 | COVER | 1 | SN: 250001-250004 |
| 23 | 8-94462-611-0 | SIGNAL, HEATER | 1 | SN: 250001-250004 |
| 24 | 3EA-55-11180 | CABLE | 1 | SN: 250001-250004 |
| 25 | 3EB-55-23320 | FLASHER | 1 | SN: 250001-250004 |
| 26 | 01010-50610 | BOLT | 1 | SN: 250001-250004 |
| 27 | 01602-20619 | WASHER, SPRING | 1 | SN: 250001-250004 |
| 28 | 3EB-55-21120 | WOW | 1 | SN: 250001-250004 |
| 29 | 3EB-55-23210 | SWITCH,BACK UP LAMP (FOR TORQUE CONVERTER) | 1 | SN: 250001-250004 |

Open this exact parts catalogue on K-Part

# Get the complete PDF catalogue

Komatsu FD18L-15 (JPN) Diesel Engine Forklift S/N 250001-350364 (Japanese)

**$89**

with PayPal | Store cart: $99

**Buy this PDF on Manuals Komatsu**

Check the model, serial range and language before payment.

Download instructions are emailed after payment confirmation.

This free sample contains 10 catalogue pages.