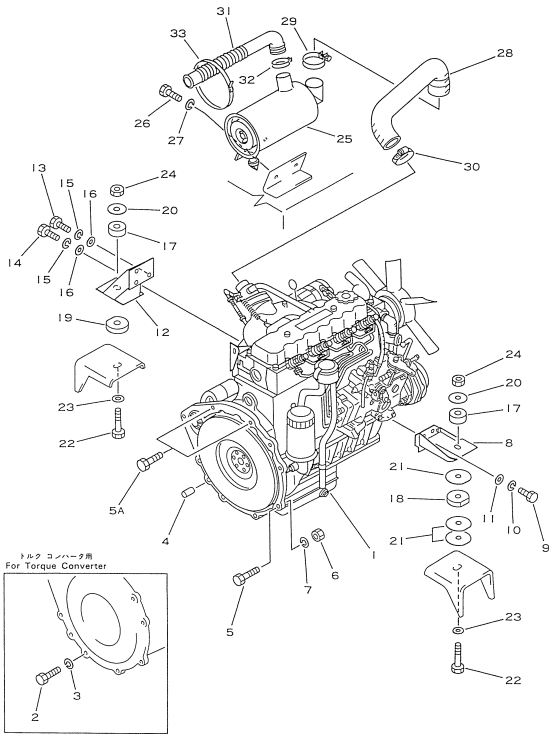

Reference: 1061

030010 ENGINE INSTALLATION PARTS (#230001-330000)

Item	Part No.	Part Name	Qty	Options
1	37B-1DG-2040	ENGINE, (FOR CLUTCH)	1	SN: 230001-330000
	37B-1DG-2050	ENGINE, (FOR TORQUE CONVERTER)	1	SN: 230001-330000
2	01010-50816	BOLT, (TORQUE CONVERTER TYPE)	8	SN: 230001-330000
3	01602-20825	WASHER, SPRING (FOR TORQUE CONVERTER)	8	SN: 230001-330000
4	04020-01228	PIN, DOWEL	2	SN: 230001-330000
5	01010-51045	BOLT	6	SN: 230001-330000
5A	01010-51050	BOLT	2	SN: 230001-330000
6	01580-11008	NAT	8	SN: 230001-330000
7	01602-21030	WASHER, SPRING	8	SN: 230001-330000
8	3EA-02-24210	BRACKET, LEFT	1	SN: 230001-330000
9	01050-51035	BOLT	4	SN: 230001-330000
10	01602-21030	WASHER, SPRING	4	SN: 230001-330000
11	01643-31032	WASHER	4	SN: 230001-330000
12	3EA-02-24240	BRACKET, RIGHT	1	SN: 230001-330000
13	37A-101-1040	BOLT	1	SN: 230001-330000
14	01050-51030	BOLT	2	SN: 230001-330000
15	01602-21030	WASHER, SPRING	3	SN: 230001-330000
16	01643-31032	WASHER	3	SN: 230001-330000
17	3EB-01-27140	RUBBER	2	SN: 230001-330000
18	3EA-02-24220	RUBBER	1	SN: 230001-330000
19	3EB-01-27130	RUBBER	1	SN: 230001-330000
20	304-01-31150	PLATE	2	SN: 230001-330000
21	3EA-02-24230	SHIM, 1.0MM	5	SN: 230001-330000
22	01010-51685	BOLT	2	SN: 230001-330000
23	01643-31645	WASHER	2	SN: 230001-330000
24	34B-01-15150	NAT	2	SN: 230001-330000
25	3EA-02-25210	AIR CLEANER ASSEMBLY	1	SN: 230001-330000
26	01010-50812	BOLT	2	SN: 230001-330000
27	01602-20825	WASHER, SPRING	2	SN: 230001-330000
28	3EA-02-25610	HOSE	1	SN: 230001-330000
29	07280-06429	CLAMP	1	SN: 230001-330000
30	07281-00609	CLAMP	1	SN: 230001-330000
31	3EA-02-25240	HOSE	1	SN: 230001-330000
32	07280-06429	CLAMP	1	SN: 230001-330000

Open this exact parts catalogue on K-Part

Item	Part No.	Part Name	Qty	Options
33	3EA-02-25250	BAND	1	SN: 230001-330000

Reference: 1061

Open this exact parts catalogue on K-Part

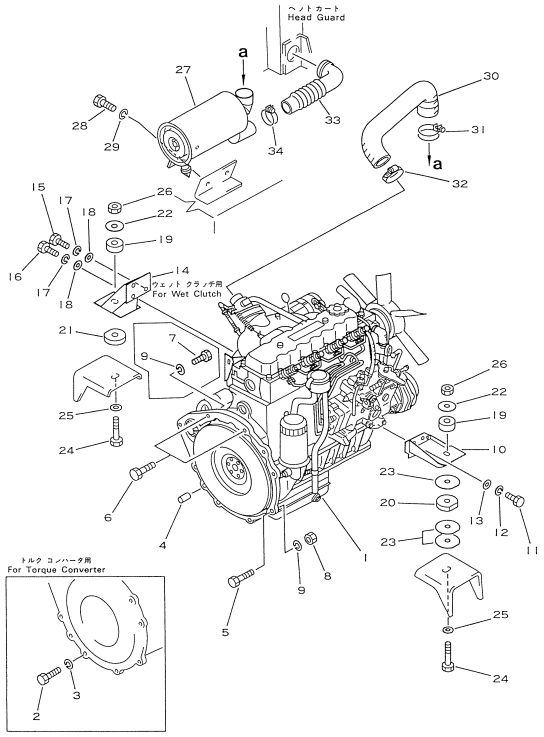

Reference: 1061A

030020 ENGINE MOUNTING PARTS (#330001-)

Item	Part No.	Part Name	Qty	Options
1	37B-1DG-2040	ENGINE, (DRY CLUTCH TYPE)	1	SN: 330001-UP
	37B-1DG-2050	ENGINE, (FOR TORQUE CONVERTER)	1	SN: 330001-UP
	37B-1DG-2060	ENGINE, (FOR WET CLUTCH)	1	SN: 330001-UP
2	01010-50816	BOLT, (TORQUE CONVERTER TYPE)	8	SN: 330001-UP
3	01602-20825	WASHER, SPRING (FOR TORQUE CONVERTER)	8	SN: 330001-UP
4	04020-01228	PIN, DOWEL	2	SN: 330001-UP
5	01010-51045	BOLT	6	SN: 330001-UP
	01010-51045	BOLT, (FOR WET CLUTCH)	5	SN: 330001-UP
6	01010-51050	BOLT	2	SN: 330001-UP
7	01010-51035	BOLT, (FOR WET CLUTCH)	3	SN: 330001-UP
8	01580-11008	NAT	8	SN: 330001-UP
9	01602-21030	WASHER, SPRING	8	SN: 330001-UP
10	3EA-02-24210	BRACKET, LEFT	1	SN: 330001-UP
11	01050-51035	BOLT	4	SN: 330001-UP
12	01602-21030	WASHER, SPRING	4	SN: 330001-UP
13	01643-31032	WASHER	4	SN: 330001-UP
14	3EA-02-24240	BRACKET, RIGHT	1	SN: 330001-UP
15	37A-101-1040	BOLT	1	SN: 330001-UP
16	01050-51030	BOLT	2	SN: 330001-UP
17	01602-21030	WASHER, SPRING	3	SN: 330001-UP
18	01643-31032	WASHER	3	SN: 330001-UP
19	3EB-01-27140	RUBBER	2	SN: 330001-UP
20	3EA-02-24220	RUBBER	1	SN: 330001-UP
21	3EB-01-27130	RUBBER	1	SN: 330001-UP
22	304-01-31150	PLATE	2	SN: 330001-UP
23	3EA-02-24230	SHIM, 1.0MM	5	SN: 330001-UP
24	01010-51685	BOLT	2	SN: 330001-UP
25	01643-31645	WASHER	2	SN: 330001-UP
26	34B-01-15150	NAT	2	SN: 330001-UP
27	37B-1CE-2060	AIR CLEANER ASSEMBLY	1	SN: 330001-UP
28	01010-50812	BOLT	2	SN: 330001-UP
29	01602-20825	WASHER, SPRING	2	SN: 330001-UP
30	3EA-02-25610	HOSE	1	SN: 330001-UP
31	07280-06429	CLAMP	1	SN: 330001-UP

Open this exact parts catalogue on K-Part

Item	Part No.	Part Name	Qty	Options
32	07281-00609	CLAMP	1	SN: 330001-UP
33	3EA-02-26210	HOSE	1	SN: 330001-UP
34	07280-06429	CLAMP	1	SN: 330001-UP

Reference: 1061A

Open this exact parts catalogue on K-Part

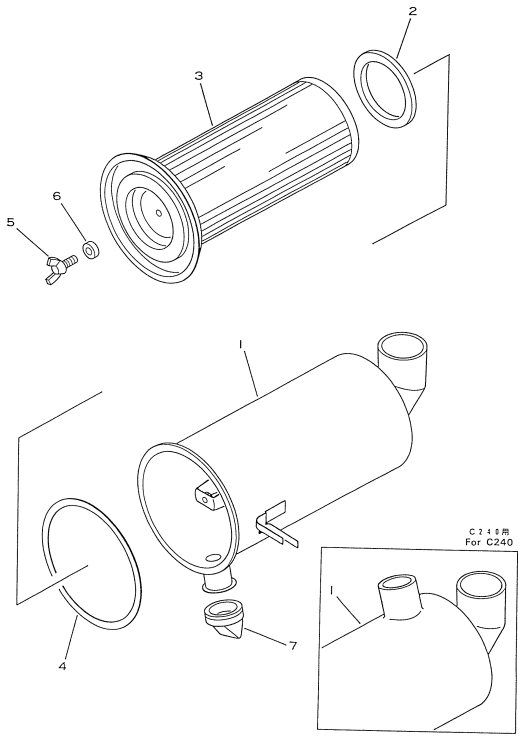

Reference: 1151

030030 AIR CLEANER (#230001-330000)

Item	Part No.	Part Name	Qty	Options
	3EA-02-25210	AIR CLEANER ASSEMBLY	1	SN: 230001-330000
1	3EA-01-25450	• BODY ASSEMBLY	1	SN: 230001-330000
2	3EB-01-25840	• PACKING	1	SN: 230001-330000
3	3EB-01-25830	• ELEMENT ASSEMBLY	1	SN: 230001-330000
4	3EB-01-25860	• PACKING	1	SN: 230001-330000
5	3EB-01-25880	• BOLT, WING	1	SN: 230001-330000
6	3EB-01-25870	• COLLAR	1	SN: 230001-330000
7	3EB-01-25850	• VALVE, VACUUM	1	SN: 230001-330000

Reference: 1151

Open this exact parts catalogue on K-Part

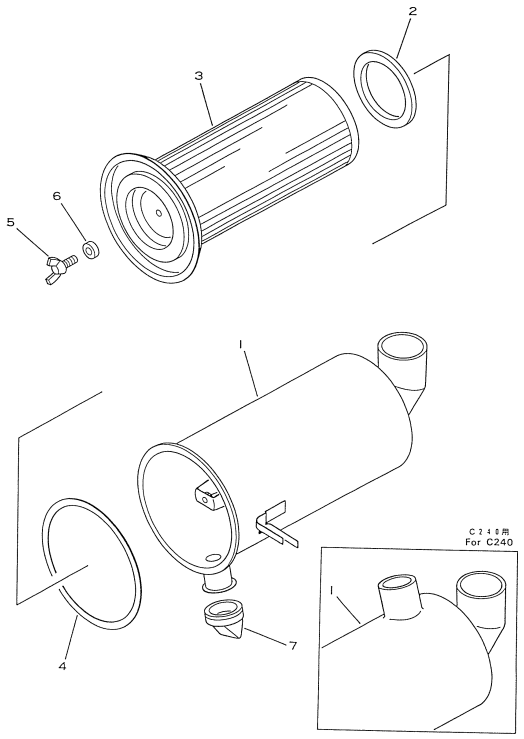

Reference: 1171

030040 AIR CLEANER (#330001-)

Item	Part No.	Part Name	Qty	Options
	37B-1CE-2060	AIR CLEANER ASSEMBLY	1	SN: 330001-UP
1	3EB-01-25710	• BODY ASSEMBLY	1	SN: 330001-UP
2	3EB-01-25840	• PACKING	1	SN: 330001-UP
3	3EB-01-25830	• ELEMENT ASSEMBLY	1	SN: 330001-UP
4	3EB-01-25860	• PACKING	1	SN: 330001-UP
5	3EB-01-25880	• BOLT, WING	1	SN: 330001-UP
6	3EB-01-25870	• COLLAR	1	SN: 330001-UP
7	3EB-01-25850	• VALVE, VACUUM	1	SN: 330001-UP

Reference: 1171

Open this exact parts catalogue on K-Part

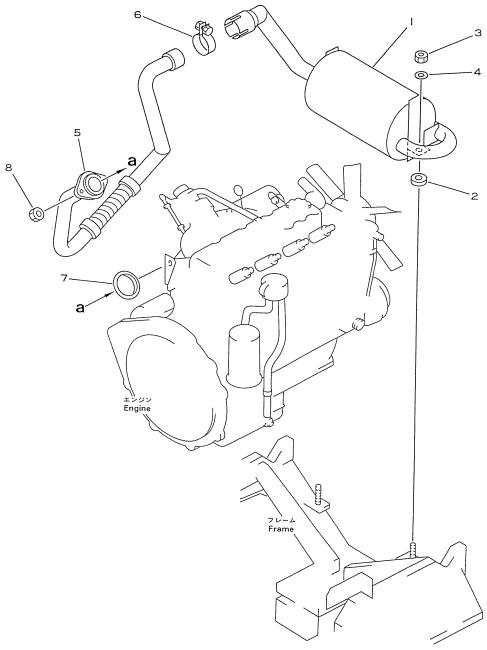

Reference: 1261

030050 EXHAUST SYSTEM

Item	Part No.	Part Name	Qty	Options
1	3EA-03-21111	MUFFLER	1	SN: 230001-UP
2	3EA-03-11120	RUBBER	2	SN: 230001-UP
3	01598-10809	NAT	2	SN: 230001-UP
4	34A-50-22140	WASHER	2	SN: 230001-UP
5	3EA-03-21810	PIPE	1	SN: 230001-UP
6	3EB-03-22151	CLAMP SUB ASSEMBLY	1	SN: 230001-UP
	01010-50830	• BOLT	1	SN: 230001-UP
	01602-20825	• WASHER, SPRING	1	SN: 230001-UP
7	9-22116-021-0	SPACER	1	SN: 230001-UP
8	9-09840-085-0	NAT	2	SN: 230001-UP

Reference: 1261

Open this exact parts catalogue on K-Part

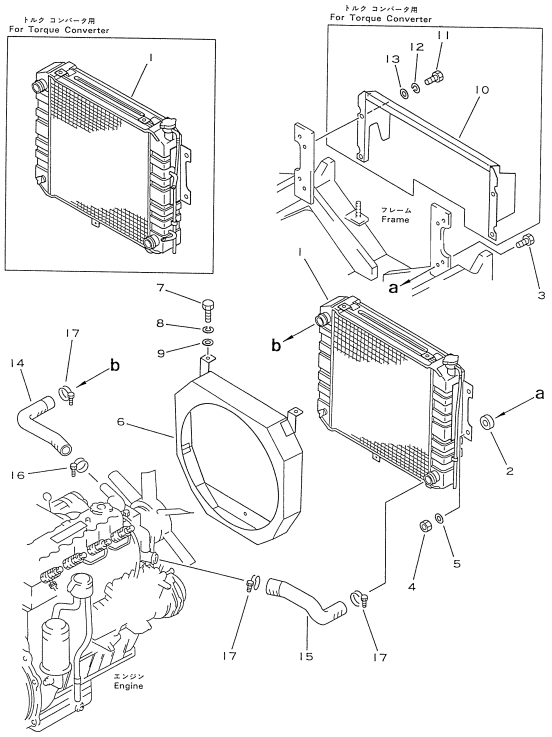

Reference: 1361

030060 RADIATOR

Item	Part No.	Part Name	Qty	Options
1	3EA-04-26410	RADIATOR ASSEMBLY (FOR CLUTCH)	1	SN: 230001-UP
	37A-1CG-2030	RADIATOR ASSEMBLY, (TORQUE CONVERTER SPEC)	1	SN: 230001-UP
	3EB-04-21130	• CAP	1	SN: 230001-UP
	34B-04-11240	• VALVE, DRAIN	1	SN: 230001-UP
	34B-04-11250	• PACKING	1	SN: 230001-UP
2	34B-04-15220	RUBBER	4	SN: 230001-UP
3	01010-50835	BOLT	4	SN: 230001-UP
4	01598-10809	NAT	4	SN: 230001-UP
5	01642-20810	WASHER	4	SN: 230001-UP
6	3EA-04-27411	SHROUD	1	SN: 230001-UP
7	01010-50812	BOLT	3	SN: 230001-UP
8	01602-20825	WASHER, SPRING	3	SN: 230001-UP
9	01642-20810	WASHER	3	SN: 230001-UP
10	3EA-04-25210	COVER, (FOR TORQUE CONVERTER)	1	SN: 230001-UP
11	01010-50812	BOLT, (TORQUE CONVERTER TYPE)	4	SN: 230001-UP
12	01602-20825	WASHER, SPRING (FOR TORQUE CONVERTER)	4	SN: 230001-UP
13	01642-20810	WASHER, (TORQUE CONVERTER TYPE)	4	SN: 230001-UP
14	3EA-04-27430	HOSE	1	SN: 230001-UP
15	3EA-04-27420	HOSE	1	SN: 230001-UP
16	07280-03826	CLAMP	1	SN: 230001-UP
17	07280-04126	CLAMP	3	SN: 230001-UP

Reference: 1361

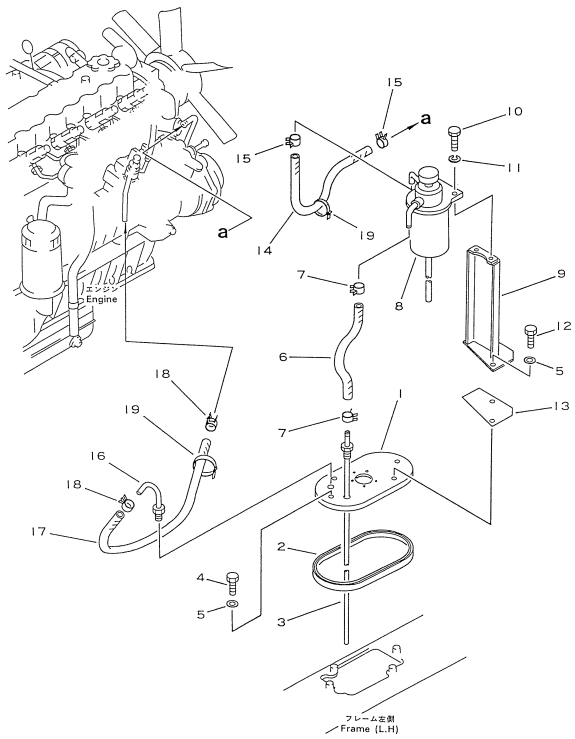

Reference: 1461

030070 FUEL SYSTEM

Item	Part No.	Part Name	Qty	Options
1	37B-1CT-2020	COVER	1	SN: 230001-UP
2	3EB-05-21130	PACKING	1	SN: 230001-UP
3	3EA-05-21340	PIPE	1	SN: 230001-UP
4	01010-50816	BOLT	4	SN: 230001-UP
5	07005-00812	GASKET	4	SN: 230001-UP
6	37B-1FA-1260	HOSE	1	SN: 230001-UP
7	07285-00130	CLIP	2	SN: 230001-UP
8	8-94412-705-2	FILTER ASSEMBLY	1	SN: 230001-UP
9	3EA-05-21510	PIPE	1	SN: 230001-UP
10	01010-50625	BOLT	2	SN: 230001-UP
11	01602-20619	WASHER, SPRING	2	SN: 230001-UP
12	01010-50820	BOLT	2	SN: 230001-UP
13	3EB-05-21470	RUBBER	1	SN: 230001-UP
14	37B-1FA-1290	HOSE	1	SN: 230001-UP
15	07285-00130	CLIP	2	SN: 230001-UP
16	3EB-05-21430	PIPE	1	SN: 230001-UP
17	37B-1FA-1020	HOSE, 370MM	1	SN: 230001-UP
18	07285-00125	CLIP	2	SN: 230001-UP
19	37B-1AE-6010	BAND	1	SN: 230001-UP

Reference: 1461

Open this exact parts catalogue on K-Part

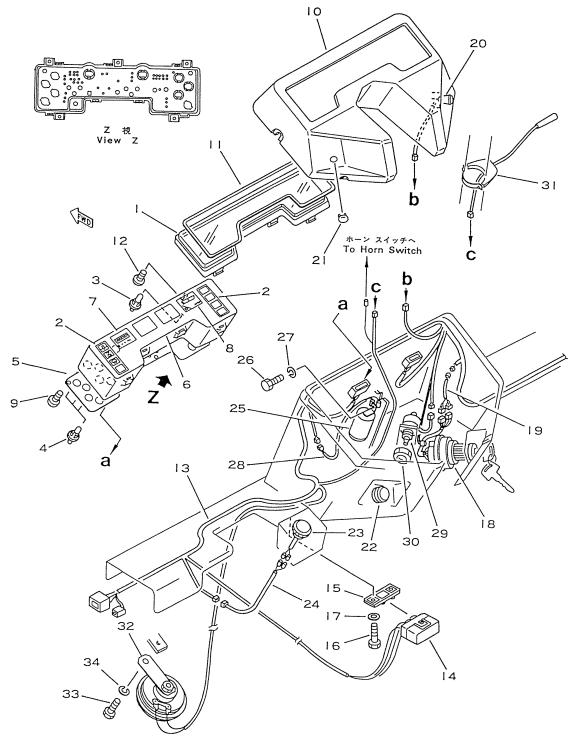

Reference: 1601

030080 ELECTRICAL SYSTEM (1/3)(#230001-230002)

Item	Part No.	Part Name	Qty	Options
1	37B-1CP-2700	PANEL ASSEMBLY, METER	1	SN: 230001-230002
	37B-1CP-2710	• PANEL ASSEMBLY	1	SN: 230001-230002
	3EB-50-23520	• • PLATE	1	SN: 230001-230002
2	3EB-50-23530	• • LENS KIT	1	SN: 230001-230002
3	3EB-50-23560	• • BULB, 3.4W, HOUR METER AND FUEL GAUGE	2	SN: 230001-230002
4	3EB-50-23580	• • LAMP, 3.4W, SAFETY CHECKER	3	SN: 230001-230002
5	3EB-50-23550	• • PLATE ASSEMBLY	1	SN: 230001-230002
6	3EA-50-23840	• • PANEL	1	SN: 230001-230002
7	3EB-50-23620	• • METER, HOUR	1	SN: 230001-230002
8	3EB-50-23650	• • GAUGE, FUEL	1	SN: 230001-230002
9	3EB-50-23590	• • SCREW	3	SN: 230001-230002
10	3EB-50-23510	• PANEL	1	SN: 230001-230002
11	3EB-50-23540	• PACKING	1	SN: 230001-230002
12	3EB-50-23570	• SCREW	5	SN: 230001-230002
13	3EA-55-21111	WIRING HARNESS	1	SN: 230001-230002
14	3EB-55-21210	• BOX ASSEMBLY, FUSE	1	SN: 230001-230002
	3EB-55-21260	• • FUSE, 10A	5	SN: 230001-230002
	3EB-55-21270	• • FUSE, 15A	1	SN: 230001-230002
15	3EB-55-21250	BRACKET	1	SN: 230001-230002
16	01220-40612	SCREW	2	SN: 230001-230002
17	01642-20608	WASHER	2	SN: 230001-230002
18	3EB-55-21161	SWITCH, STARTER	1	SN: 230001-230002
	3EB-55-11580	• KEY	2	SN: 230001-230002
19	3EB-55-22690	CABLE	1	SN: 230001-230002
20	34C-55-12410	SWITCH, LAMP	1	SN: 230001-230002
21	3EB-50-21150	CLIP	1	SN: 230001-230002
22	34A-55-24471	COVER	1	SN: 230001-230002
23	9-82530-041-0	SIGNAL, HEATER	1	SN: 230001-230002
24	3EA-55-11180	CABLE	1	SN: 230001-230002
25	3EB-55-23320	FLASHER	1	SN: 230001-230002
26	01010-50610	BOLT	1	SN: 230001-230002
27	01602-20619	WASHER, SPRING	1	SN: 230001-230002
28	3EB-55-21120	WOW	1	SN: 230001-230002

Open this exact parts catalogue on K-Part

Get the complete PDF catalogue

Komatsu FD15H-15 (JPN) Diesel Engine Forklift S/N 230001-331617 (Japanese)

$89

with PayPal | Store cart: $99

Buy this PDF on Manuals Komatsu

Check the model, serial range and language before payment.

Download instructions are emailed after payment confirmation.

This free sample contains 10 catalogue pages.