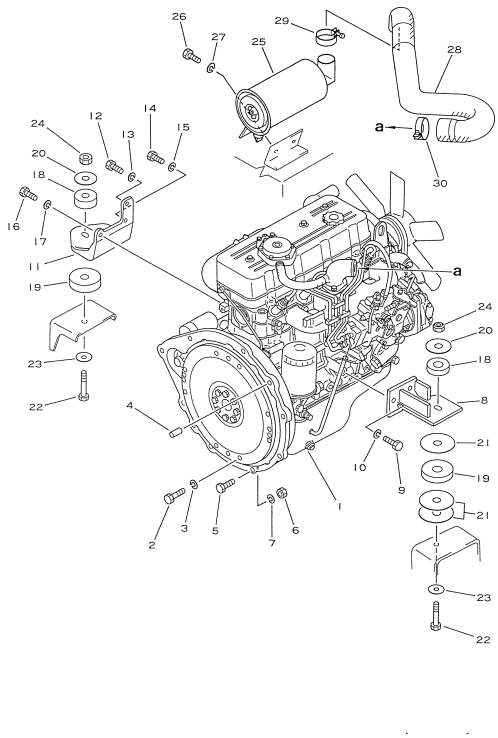

Reference: 1051

030010 ENGINE INSTALLATION PARTS(#250001-350000)

Item	Part No.	Part Name	Qty	Options
1	37A-1DC-2010	ENGINE, (FOR DRY CLUTCH)	1	SN: 250001-350000
	37A-1DC-2030	ENGINE, (FOR TORQUE CONVERTER)	1	SN: 250001-350000
2	01010-50816	BOLT, (FOR TORQUE CONVERTER)	8	SN: 250001-350000
3	01602-20825	WASHER, SPRING (FOR TORQUE CONVERTER)	8	SN: 250001-350000
4	04020-01228	PIN,DOWEL	2	SN: 250001-350000
5	01010-51045	BOLT, (FOR TORQUE CONVERTER)	8	SN: 250001-350000
6	01580-11008	NUT, (FOR TORQUE CONVERTER)	8	SN: 250001-350000
7	01602-21030	WASHER, SPRING (FOR TORQUE CONVERTER)	8	SN: 250001-350000
8	3EB-02-27110	BRACKET, LEFT	1	SN: 250001-350000
9	37A-101-2010	BOLT	3	SN: 250001-350000
10	01602-21236	WASHER, SPRING	3	SN: 250001-350000
11	3EB-02-27120	BRACKET, RIGHT	1	SN: 250001-350000
12	01050-51030	BOLT	1	SN: 250001-350000
13	01602-21030	WASHER, SPRING	1	SN: 250001-350000
14	01050-51430	BOLT	1	SN: 250001-350000
15	01602-21442	WASHER, SPRING	1	SN: 250001-350000
16	37A-101-2010	BOLT	1	SN: 250001-350000
17	01602-21236	WASHER, SPRING	1	SN: 250001-350000
18	3EB-01-27140	RUBBER	2	SN: 250001-350000
19	3EB-01-27130	RUBBER	2	SN: 250001-350000
20	304-01-31150	PLATE	2	SN: 250001-350000
21	304-01-31160	SHIM, 1.0MM	3	SN: 250001-350000
22	01010-51685	BOLT	2	SN: 250001-350000
23	01643-31645	WASHER	2	SN: 250001-350000
24	34B-01-15150	NAT	2	SN: 250001-350000
25	3EA-01-25710	AIR CLEANER ASSEMBLY	1	SN: 250001-350000
26	01010-50812	BOLT	2	SN: 250001-350000
27	01602-20825	WASHER, SPRING	2	SN: 250001-350000
28	3EA-02-25810	HOSE	1	SN: 250001-350000
29	07280-05429	CLAMP	1	SN: 250001-350000
30	07280-06429	CLAMP	1	SN: 250001-350000

Reference: 1051

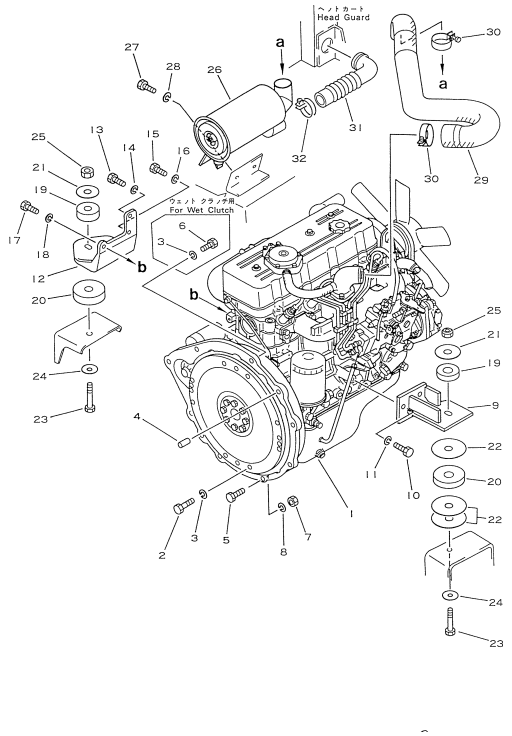

Reference: 1051A

030020 ENGINE MOUNTING PARTS (#350001-)

Item	Part No.	Part Name	Qty	Options
1	37A-1DC-2010	ENGINE, (FOR DRY CLUTCH)	1	SN: 350001-UP
	37A-1DC-2030	ENGINE, (FOR TORQUE CONVERTER)	1	SN: 350001-UP
2	01010-50816	BOLT, (FOR TORQUE CONVERTER)	8	SN: 350001-UP
3	01602-20825	WASHER, SPRING (FOR TORQUE CONVERTER)	8	SN: 350001-UP
4	04020-01228	PIN, DOWEL (FOR TORQUE CONVERTER)	2	SN: 350001-UP
5	01010-51045	BOLT, (FOR TORQUE CONVERTER)	8	SN: 350001-UP
7	01580-11008	NUT, (FOR TORQUE CONVERTER)	8	SN: 350001-UP
8	01602-21030	WASHER, SPRING (FOR TORQUE CONVERTER)	8	SN: 350001-UP
9	3EB-02-27110	BRACKET, LEFT	1	SN: 350001-UP
10	37A-101-2010	BOLT	3	SN: 350001-UP
11	01602-21236	WASHER, SPRING	3	SN: 350001-UP
12	3EB-02-27120	BRACKET, RIGHT	1	SN: 350001-UP
13	01050-51030	BOLT	1	SN: 350001-UP
14	01602-21030	WASHER, SPRING	1	SN: 350001-UP
15	01050-51430	BOLT	1	SN: 350001-UP
16	01602-21442	WASHER, SPRING	1	SN: 350001-UP
17	37A-101-2010	BOLT	1	SN: 350001-UP
18	01602-21236	WASHER, SPRING	1	SN: 350001-UP
19	3EB-01-27140	RUBBER	2	SN: 350001-UP
20	3EB-01-27130	RUBBER	2	SN: 350001-UP
21	304-01-31150	PLATE	2	SN: 350001-UP
22	304-01-31160	SHIM, 1.0MM	3	SN: 350001-UP
23	01010-51685	BOLT	2	SN: 350001-UP
24	01643-31645	WASHER	2	SN: 350001-UP
25	34B-01-15150	NAT	2	SN: 350001-UP
26	37B-1CE-2030	AIR CLEANER ASSEMBLY	1	SN: 350001-UP
27	01010-50812	BOLT	2	SN: 350001-UP
28	01602-20825	WASHER, SPRING	2	SN: 350001-UP
29	3EA-02-26610	HOSE	1	SN: 350001-UP
30	07280-06429	CLAMP	2	SN: 350001-UP
31	3EA-02-25240	HOSE	1	SN: 350001-UP
32	07280-06429	CLAMP	1	SN: 350001-UP

Open this exact parts catalogue on K-Part

Open this exact parts catalogue on K-Part

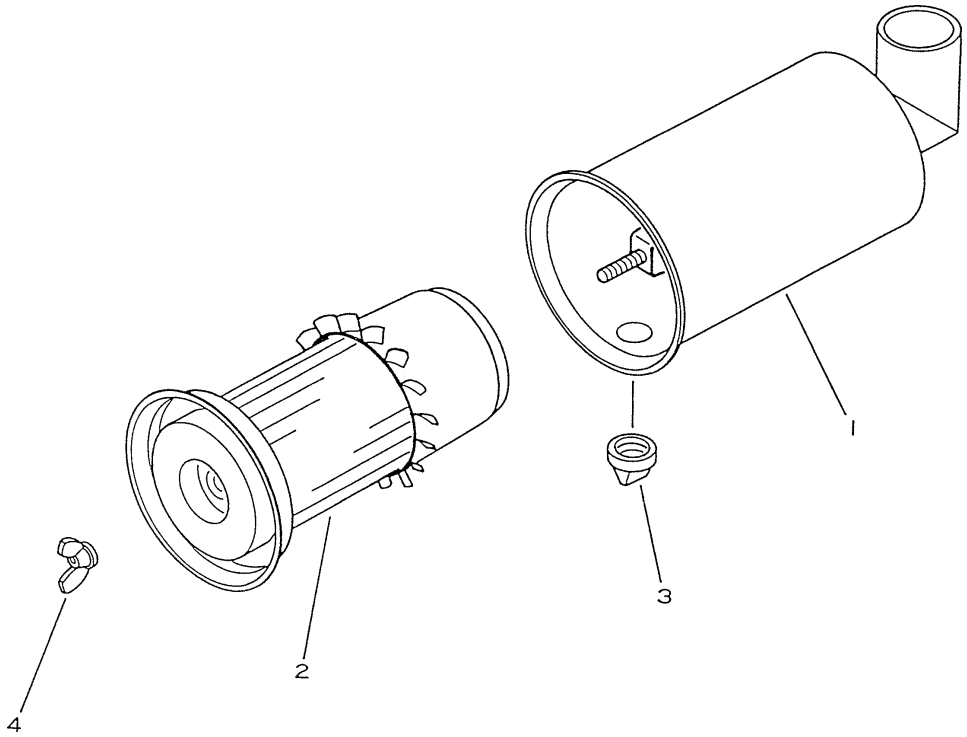

Reference: 1101

030030 AIR CLEANER (#250001-350000)

Item	Part No.	Part Name	Qty	Options
	3EA-01-25710	AIR CLEANER ASSEMBLY	1	SN: 250001-350000
1	3EA-01-25720	• BODY ASSEMBLY	1	SN: 250001-350000
2	3EA-01-17130	• ELEMENT ASSEMBLY	1	SN: 250001-350000
3	3EA-01-17150	• VALVE, VACUUM	1	SN: 250001-350000
4	3EA-01-17140	• NUT,WING	1	SN: 250001-350000

Reference: 1101

Open this exact parts catalogue on K-Part

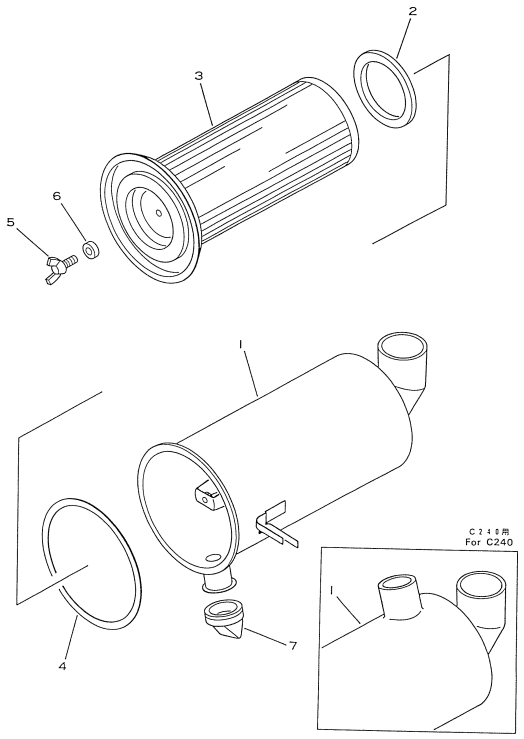

Reference: 1171

030040 AIR CLEANER(#350001-)

Item	Part No.	Part Name	Qty	Options
	37B-1CE-2030	AIR CLEANER ASSEMBLY	1	SN: 350001-UP
1	3EB-01-25810	• BODY ASSEMBLY	1	SN: 350001-UP
2	3EB-01-25840	• PACKING	1	SN: 350001-UP
3	3EB-01-25830	• ELEMENT ASSEMBLY	1	SN: 350001-UP
4	3EB-01-25860	• PACKING	1	SN: 350001-UP
5	3EB-01-25880	• BOLT, WING	1	SN: 350001-UP
6	3EB-01-25870	• COLLAR	1	SN: 350001-UP
7	3EB-01-25850	• VALVE, VACUUM	1	SN: 350001-UP

Reference: 1171

Open this exact parts catalogue on K-Part

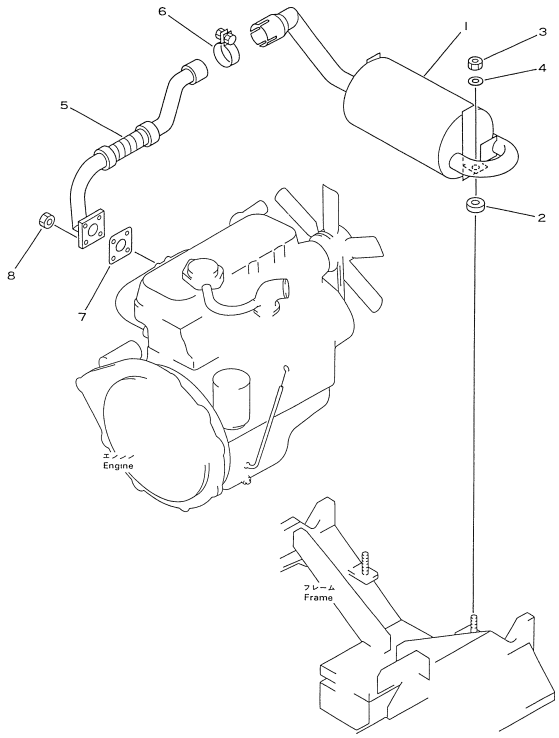

Reference: 1251

030050 EXHAUST SYSTEM

Item	Part No.	Part Name	Qty	Options
1	3EA-03-21111	MUFFLER	1	SN: 250001-UP
2	3EA-03-11120	RUBBER	2	SN: 250001-UP
3	01598-10809	NAT	2	SN: 250001-UP
4	34A-50-22140	WASHER	2	SN: 250001-UP
5	3EA-03-21710	PIPE	1	SN: 250001-UP
6	3EB-03-22151	CLAMP SUB ASSEMBLY	1	SN: 250001-UP
	01010-50830	• BOLT	1	SN: 250001-UP
	01602-20825	• WASHER, SPRING	1	SN: 250001-UP
7	9-14145-802-0	GASKET	1	SN: 250001-UP
8	9-09110-408-0	NAT	4	SN: 250001-UP

Reference: 1251

Open this exact parts catalogue on K-Part

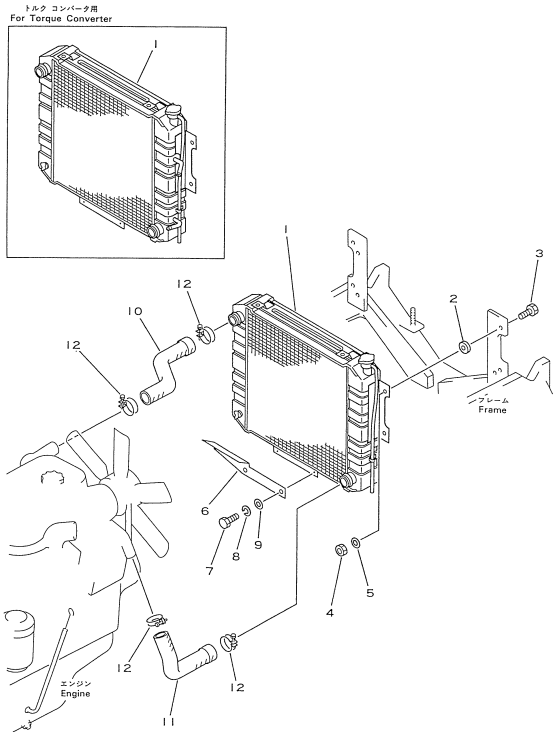

Reference: 1351

030060 RADIATOR

Item	Part No.	Part Name	Qty	Options
1	37A-1CH-2010	RADIATOR ASSEMBLY,(CLUTCH USE)	1	SN: 250001-UP
	37A-1CG-2010	RADIATOR ASSEMBLY,(FOR TORQUE CONVERTER)	1	SN: 250001-UP
	3EB-04-21130	• CAP	1	SN: 250001-UP
	34B-04-11240	• VALVE, DRAIN	1	SN: 250001-UP
	34B-04-11250	• PACKING	1	SN: 250001-UP
2	34B-04-15220	RUBBER	4	SN: 250001-UP
3	01010-50835	BOLT	4	SN: 250001-UP
4	01598-10809	NAT	4	SN: 250001-UP
5	01642-20810	WASHER	4	SN: 250001-UP
6	3EA-04-25180	COVER	1	SN: 250001-UP
7	01010-50816	BOLT	2	SN: 250001-UP
8	01602-20825	WASHER, SPRING	2	SN: 250001-UP
9	01642-20810	WASHER	2	SN: 250001-UP
10	3EA-04-22310	HOSE	1	SN: 250001-UP
11	3EA-04-22320	HOSE	1	SN: 250001-UP
12	07280-04126	CLAMP	4	SN: 250001-UP

Reference: 1351

Open this exact parts catalogue on K-Part

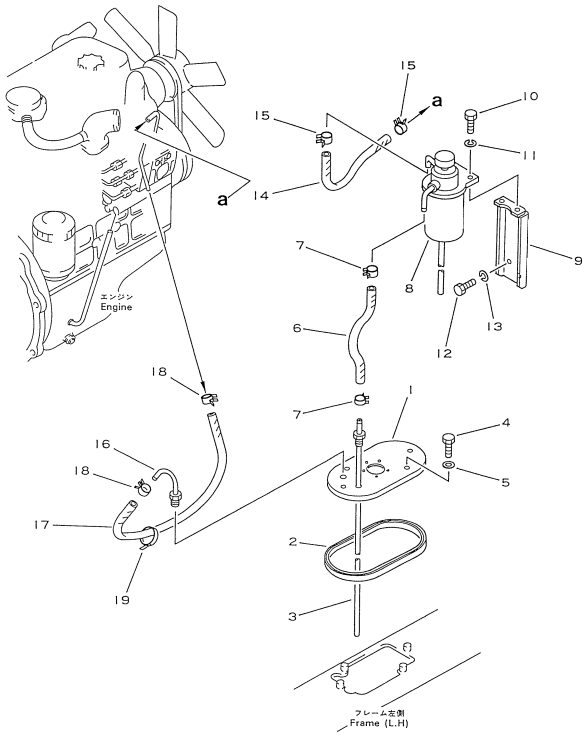

Reference: 1451

030070 FUEL SYSTEM(#250001-350000)

Item	Part No.	Part Name	Qty	Options
1	37B-1CT-2020	COVER	1	SN: 250001-350000
2	3EB-05-21130	PACKING	1	SN: 250001-350000
3	3EA-05-21340	PIPE	1	SN: 250001-350000
4	01010-50816	BOLT	4	SN: 250001-350000
5	07005-00812	GASKET	4	SN: 250001-350000
6	37B-1FA-1310	HOSE	1	SN: 250001-350000
7	07285-00130	CLIP	2	SN: 250001-350000
8	8-94412-705-2	FILTER ASSEMBLY	1	SN: 250001-350000
9	3EA-05-21330	BRACKET	1	SN: 250001-350000
10	01010-50620	BOLT	2	SN: 250001-350000
11	01602-20619	WASHER, SPRING	2	SN: 250001-350000
12	01010-50820	BOLT	2	SN: 250001-350000
13	01602-20825	WASHER, SPRING	2	SN: 250001-350000
14	37B-1FA-1270	HOSE	1	SN: 250001-350000
15	07285-00130	CLIP	2	SN: 250001-350000
16	3EB-05-21430	PIPE	1	SN: 250001-350000
17	37B-1FA-1020	HOSE, 370MM	1	SN: 250001-350000
18	07285-00125	CLIP	2	SN: 250001-350000
19	37B-1AE-6010	BAND	4	SN: 250001-350000

Reference: 1451

Open this exact parts catalogue on K-Part

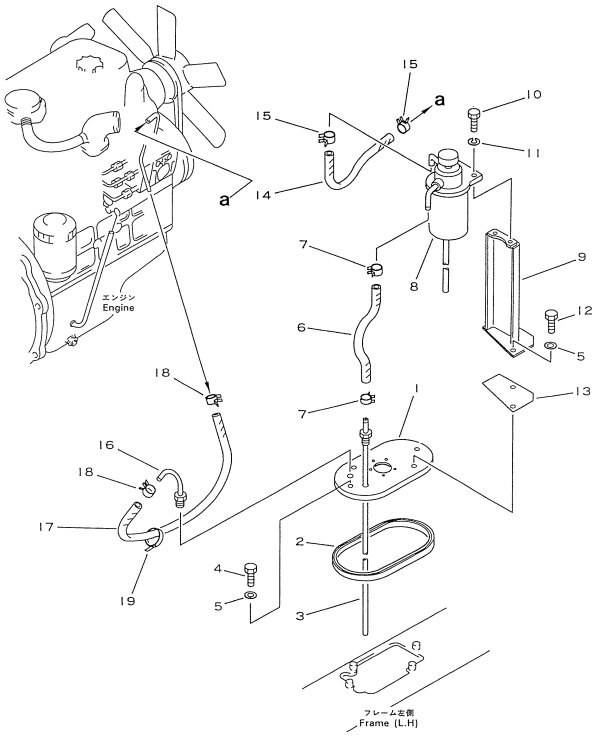

Reference: 1451A

030080 FUEL SYSTEM (#350001-)

Item	Part No.	Part Name	Qty	Options
1	37B-1CT-2020	COVER	1	SN: 350001-UP
2	3EB-05-21130	PACKING	1	SN: 350001-UP
3	3EA-05-21340	PIPE	1	SN: 350001-UP
4	01010-50816	BOLT	2	SN: 350001-UP
5	07005-00812	GASKET	4	SN: 350001-UP
6	37B-1FA-1260	HOSE	1	SN: 350001-UP
7	07285-00130	CLIP	2	SN: 350001-UP
8	8-94412-705-2	FILTER ASSEMBLY	1	SN: 350001-UP
9	3EB-05-21510	BRACKET	1	SN: 350001-UP
10	01010-50625	BOLT	2	SN: 350001-UP
11	01602-20619	WASHER, SPRING	2	SN: 350001-UP
12	01010-50820	BOLT	2	SN: 350001-UP
13	3EB-05-21470	RUBBER	1	SN: 350001-UP
14	37B-1FA-1270	HOSE	1	SN: 350001-UP
15	07285-00130	CLIP	2	SN: 350001-UP
16	3EB-05-21430	PIPE	1	SN: 350001-UP
17	37B-1FA-1020	HOSE, 370MM	1	SN: 350001-UP
18	07285-00125	CLIP	2	SN: 350001-UP
19	37B-1AE-6010	BAND	4	SN: 350001-UP

Reference: 1451A

Open this exact parts catalogue on K-Part

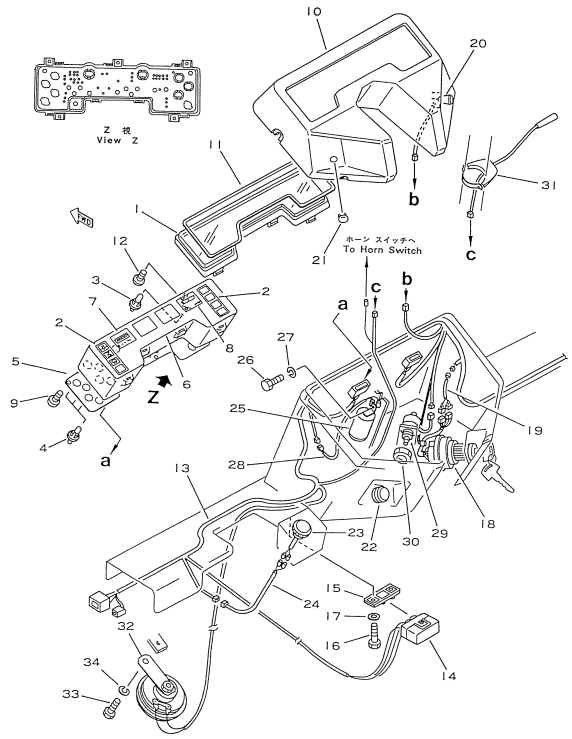

Reference: 1601

030090 ELECTRICAL SYSTEM (1/3)(#250001-250004)

Item	Part No.	Part Name	Qty	Options
1	37B-1CP-2200	PANEL ASSEMBLY, METER	1	SN: 250001-250004
	37B-1CP-2210	• PANEL ASSEMBLY	1	SN: 250001-250004
	3EB-50-23520	• • PLATE	1	SN: 250001-250004
2	3EB-50-23530	• • LENS KIT	1	SN: 250001-250004
3	3EB-50-23560	• • BULB, 3.4W, FUEL GAUGE	2	SN: 250001-250004
4	3EB-50-23580	• • BULB, 3.4W, SAFETY CHECKER	3	SN: 250001-250004
5	3EB-50-23550	• • PLATE ASSEMBLY	1	SN: 250001-250004
6	3EB-50-23510	• • PANEL	1	SN: 250001-250004
8	3EB-50-23650	• • GAUGE, FUEL	1	SN: 250001-250004
9	3EB-50-23590	• • SCREW	3	SN: 250001-250004
10	3EB-50-23510	• PANEL	1	SN: 250001-250004
11	3EB-50-23540	• PACKING	1	SN: 250001-250004
12	3EB-50-23570	• SCREW	5	SN: 250001-250004
13	3EA-55-21111	WIRING HARNESS	1	SN: 250001-250004
14	3EB-55-21210	• BOX ASSEMBLY, FUSE	1	SN: 250001-250004
	3EB-55-21260	• • FUSE, 10A	5	SN: 250001-250004
	3EB-55-21270	• • FUSE, 15A	1	SN: 250001-250004
15	3EB-55-21250	BRACKET	1	SN: 250001-250004
16	01220-40612	SCREW	2	SN: 250001-250004
17	01642-20608	WASHER	2	SN: 250001-250004
18	3EB-55-21161	SWITCH, STARTER	1	SN: 250001-250004
	3EB-55-11580	• KEY	2	SN: 250001-250004
19	3EB-55-22690	CABLE	1	SN: 250001-250004
20	34C-55-12410	SWITCH, LAMP	1	SN: 250001-250004
21	3EB-50-21150	CLIP	1	SN: 250001-250004
22	34A-55-24471	COVER	1	SN: 250001-250004
23	8-94462-611-0	SIGNAL, HEATER	1	SN: 250001-250004
24	3EA-55-11180	CABLE	1	SN: 250001-250004
25	3EB-55-23320	FLASHER	1	SN: 250001-250004
26	01010-50610	BOLT	1	SN: 250001-250004
27	01602-20619	WASHER, SPRING	1	SN: 250001-250004
28	3EB-55-21120	WOW	1	SN: 250001-250004
29	3EB-55-23210	SWITCH, BACK-UP LAMP (FOR TORQUE CONVERTER)	1	SN: 250001-250004

Open this exact parts catalogue on K-Part

Get the complete PDF catalogue

Komatsu FD14L-15 (JPN) Diesel Engine Forklift S/N 250001-350364 (Japanese)

$89

with PayPal | Store cart: $99

Buy this PDF on Manuals Komatsu

Check the model, serial range and language before payment.

Download instructions are emailed after payment confirmation.

This free sample contains 10 catalogue pages.