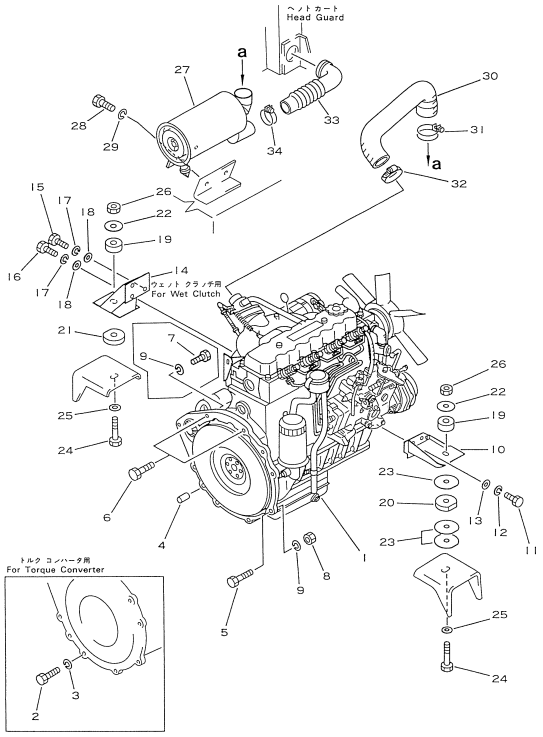

Reference: 1061A

030010 ENGINE MOUNTING PARTS

Item	Part No.	Part Name	Qty	Options
1	37B-1DG-2040	ENGINE, (FOR DRY CLUTCH)	1	SN: 330001-UP
	37B-1DG-2050	ENGINE, (FOR TORQUE CONVERTER)	1	SN: 330001-UP
2	01010-50816	BOLT, (FOR TORQUE CONVERTER)	8	SN: 330001-UP
3	01602-20825	WASHER, SPRING (FOR TORQUE CONVERTER)	8	SN: 330001-UP
4	04020-01228	PIN, DOWEL	2	SN: 330001-UP
5	01010-51045	BOLT	6	SN: 330001-UP
6	01010-51050	BOLT	2	SN: 330001-UP
8	01580-11008	NAT	8	SN: 330001-UP
9	01602-21030	WASHER, SPRING	8	SN: 330001-UP
10	3EA-02-24210	BRACKET, LEFT	1	SN: 330001-UP
11	01050-51035	BOLT	4	SN: 330001-UP
12	01602-21030	WASHER, SPRING	4	SN: 330001-UP
13	01643-31032	WASHER	4	SN: 330001-UP
14	3EA-02-24240	BRACKET, RIGHT	1	SN: 330001-UP
15	37A-101-1040	BOLT	1	SN: 330001-UP
16	01050-51030	BOLT	2	SN: 330001-UP
17	01602-21030	WASHER, SPRING	3	SN: 330001-UP
18	01643-31032	WASHER	3	SN: 330001-UP
19	3EB-01-27140	RUBBER	2	SN: 330001-UP
20	3EA-02-24220	RUBBER	1	SN: 330001-UP
21	3EB-01-27130	RUBBER	1	SN: 330001-UP
22	304-01-31150	PLATE	2	SN: 330001-UP
23	3EA-02-24230	SHIM, 1.0MM	5	SN: 330001-UP
24	01010-51685	BOLT	2	SN: 330001-UP
25	01643-31645	WASHER	2	SN: 330001-UP
26	34B-01-15150	NAT	2	SN: 330001-UP
27	37B-1CE-2060	AIR CLEANER ASSEMBLY	1	SN: 330001-UP
28	01010-50812	BOLT	2	SN: 330001-UP
29	01602-20825	WASHER, SPRING	2	SN: 330001-UP
30	3EA-02-25610	HOSE	1	SN: 330001-UP
31	07280-06429	CLAMP	1	SN: 330001-UP
32	07281-00609	CLAMP	1	SN: 330001-UP
33	3EA-02-26210	HOSE	1	SN: 330001-UP
34	07280-06429	CLAMP	1	SN: 330001-UP

Open this exact parts catalogue on K-Part

Open this exact parts catalogue on K-Part

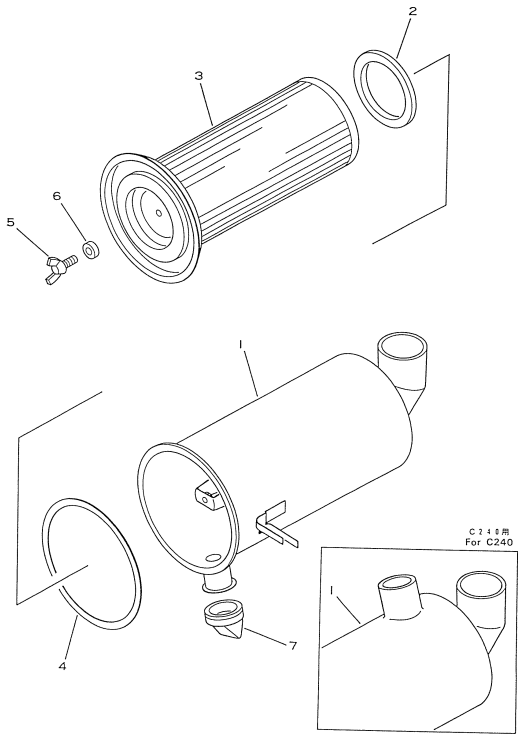

Reference: 1171

030020 AIR CLEANER

Item	Part No.	Part Name	Qty	Options
	37B-1CE-2060	AIR CLEANER ASSEMBLY	1	SN: 330001-UP
1	3EB-01-25710	• BODY ASSEMBLY	1	SN: 330001-UP
2	3EB-01-25840	• PACKING	1	SN: 330001-UP
3	3EB-01-25830	• ELEMENT ASSEMBLY	1	SN: 330001-UP
4	3EB-01-25860	• PACKING	1	SN: 330001-UP
5	3EB-01-25880	• BOLT, WING	1	SN: 330001-UP
6	3EB-01-25870	• COLLAR	1	SN: 330001-UP
7	3EB-01-25850	• VALVE, VACUATOR	1	SN: 330001-UP

Reference: 1171

Open this exact parts catalogue on K-Part

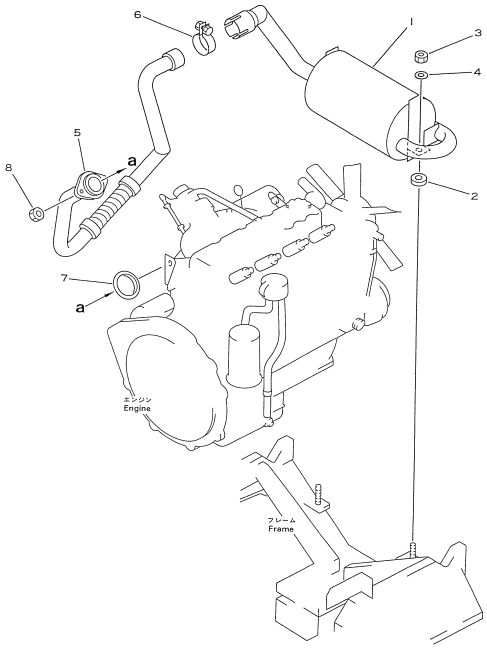

Reference: 1261

030030 EXHAUST SYSTEM

Item	Part No.	Part Name	Qty	Options
1	3EA-03-21111	MUFFLER	1	SN: 330001-UP
2	3EA-03-11120	RUBBER	2	SN: 330001-UP
3	01598-10809	NAT	2	SN: 330001-UP
4	34A-50-22140	WASHER	2	SN: 330001-UP
5	3EA-03-21810	PIPE	1	SN: 330001-UP
6	3EB-03-22151	CLAMP SUB ASSEMBLY	1	SN: 330001-UP
	01010-50830	• BOLT	1	SN: 330001-UP
	01602-20825	• WASHER, SPRING	1	SN: 330001-UP
7	9-22116-021-0	SPACER	1	SN: 330001-UP
8	9-09840-085-0	NAT	2	SN: 330001-UP

Reference: 1261

Open this exact parts catalogue on K-Part

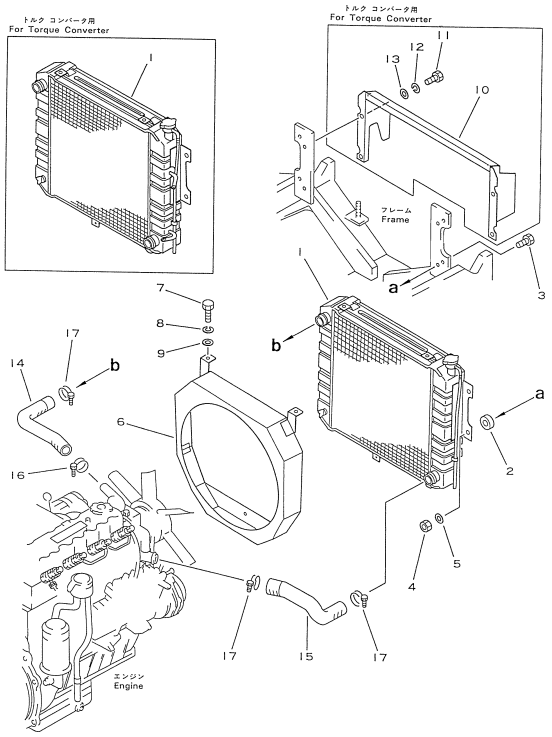

Reference: 1361

030040 RADIATOR

Item	Part No.	Part Name	Qty	Options
1	3EA-04-26410	RADIATOR ASSEMBLY, (FOR CLUTCH)	1	SN: 330001-UP
	37A-1CG-2030	RADIATOR ASSEMBLY, (TORQUE CONVERTER SPEC)	1	SN: 330001-UP
	3EB-04-21130	• CAP	1	SN: 330001-UP
	34B-04-11240	• VALVE, DRAIN	1	SN: 330001-UP
	34B-04-11250	• PACKING	1	SN: 330001-UP
2	34B-04-15220	RUBBER	4	SN: 330001-UP
3	01010-50835	BOLT	4	SN: 330001-UP
4	01598-10809	NAT	4	SN: 330001-UP
5	01642-20810	WASHER	4	SN: 330001-UP
6	3EA-04-27411	SHROUD	1	SN: 330001-UP
7	01010-50812	BOLT	3	SN: 330001-UP
8	01602-20825	WASHER, SPRING	3	SN: 330001-UP
9	01642-20810	WASHER	3	SN: 330001-UP
10	3EA-04-25210	COVER, (FOR TORQUE CONVERTER)	1	SN: 330001-UP
11	01010-50812	BOLT, (FOR TORQUE CONVERTER)	4	SN: 330001-UP
12	01602-20825	WASHER, SPRING (FOR TORQUE CONVERTER)	4	SN: 330001-UP
13	01642-20810	WASHER, (FOR TORQUE CONVERTER)	4	SN: 330001-UP
14	3EA-04-27430	HOSE	1	SN: 330001-UP
15	3EA-04-27420	HOSE	1	SN: 330001-UP
16	07280-03826	CLAMP	1	SN: 330001-UP
17	07280-04126	CLAMP	3	SN: 330001-UP

Reference: 1361

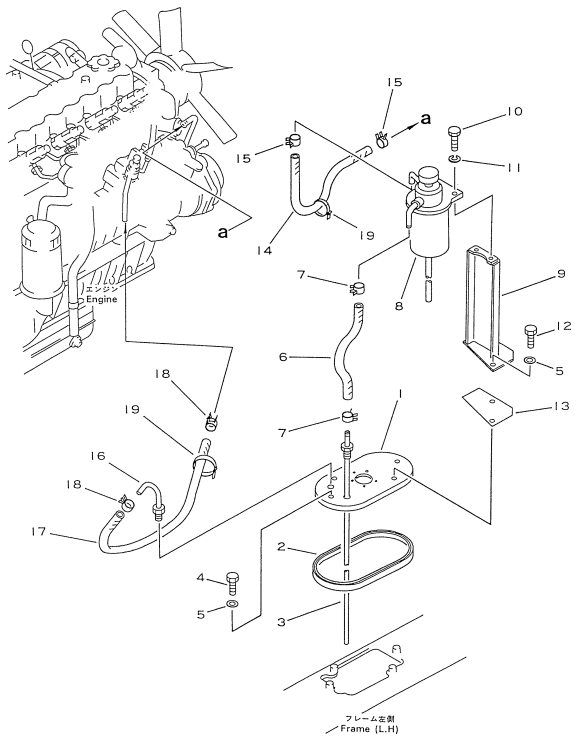

Reference: 1461

030050 FUEL SYSTEM

Item	Part No.	Part Name	Qty	Options
1	37B-1CT-2020	COVER	1	SN: 330001-UP
2	3EB-05-21130	PACKING	1	SN: 330001-UP
3	3EA-05-21340	PIPE	1	SN: 330001-UP
4	01010-50816	BOLT	4	SN: 330001-UP
5	07005-00812	GASKET	4	SN: 330001-UP
6	37B-1FA-1260	HOSE	1	SN: 330001-UP
7	07285-00130	CLIP	2	SN: 330001-UP
8	8-94412-705-2	FILTER ASSEMBLY	1	SN: 330001-UP
9	3EA-05-21510	PIPE	1	SN: 330001-UP
10	01010-50625	BOLT	2	SN: 330001-UP
11	01602-20619	WASHER, SPRING	2	SN: 330001-UP
12	01010-50820	BOLT	2	SN: 330001-UP
13	3EB-05-21470	RUBBER	1	SN: 330001-UP
14	37B-1FA-1290	HOSE	1	SN: 330001-UP
15	07285-00130	CLIP	2	SN: 330001-UP
16	3EB-05-21430	PIPE	1	SN: 330001-UP
17	37B-1FA-1020	HOSE, 370MM	1	SN: 330001-UP
18	07285-00125	CLIP	2	SN: 330001-UP
19	37B-1AE-6010	BAND	1	SN: 330001-UP

Reference: 1461

Open this exact parts catalogue on K-Part

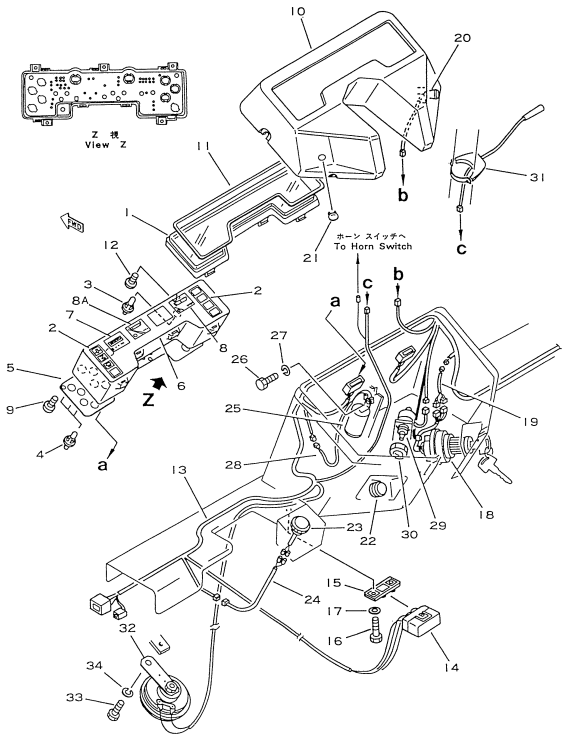

Reference: 1601D

030060 ELECTRICAL SYSTEM (1/3)

Item	Part No.	Part Name	Qty	Options
	37B-1CP-2402	PANEL ASSEMBLY, METER	1	SN: 330001-UP
	37B-1CP-2411	• PANEL ASSEMBLY	1	SN: 330001-UP
1	3EB-50-23520	• • PLATE	1	SN: 330001-UP
2	3EB-50-23530	• • LENS KIT	1	SN: 330001-UP
3	3EB-50-23560	• • BULB, 3.4W, HOUR METER AND FUEL GAUGE	2	SN: 330001-UP
4	3EB-50-23580	• • BULB, 3.4W, SAFETY CHECKER	3	SN: 330001-UP
5	3EB-50-23551	• • PLATE ASSEMBLY	1	SN: 330001-UP
6	3EB-50-23940	• • PLATE	1	SN: 330001-UP
7	3EB-50-23620	• • METER, HOUR	1	SN: 330001-UP
8	3EB-50-23651	• • GAUGE, FUEL	1	SN: 330001-UP
8A	3EB-50-23631	• • GAUGE, WATER	1	SN: 330001-UP
9	3EB-50-23590	• • SCREW	3	SN: 330001-UP
10	3EB-50-23510	• PANEL	1	SN: 330001-UP
11	3EB-50-23540	• PACKING	1	SN: 330001-UP
12	3EB-50-23570	• SCREW	5	SN: 330001-UP
13	3EA-55-21114	WIRING HARNESS	1	SN: 330001-UP
14	3EB-55-21211	• BOX ASSEMBLY, FUSE	1	SN: 330001-UP
	37B-1EJ-2010	• • FUSE, 10A	5	SN: 330001-UP
	37B-1EJ-2020	• • FUSE, 15A	1	SN: 330001-UP
15	3EB-55-21250	BRACKET	1	SN: 330001-UP
16	01220-40612	SCREW	2	SN: 330001-UP
17	01642-20608	WASHER	2	SN: 330001-UP
18	3EB-55-21162	SWITCH, STARTER	1	SN: .-UP
	3EB-55-21161	□ SWITCH, STARTER	1	SN: 330001-.
	3EB-55-11580	• KEY	2	SN: 330001-UP
19	3EB-55-22690	CABLE	1	SN: 330001-UP
20	34C-55-12411	SWITCH, LAMP	1	SN: 330001-UP
21	3EB-50-21150	CLIP	1	SN: 330001-UP
22	34A-55-24471	COVER	1	SN: 330001-UP
23	9-82530-041-0	SIGNAL, HEATER	1	SN: 330001-UP
24	3EA-55-11180	CABLE	1	SN: 330001-UP
25	3EB-55-23320	FLASHER	1	SN: 330001-UP
26	01010-50610	BOLT	1	SN: 330001-UP

Open this exact parts catalogue on K-Part

Item	Part No.	Part Name	Qty	Options
27	01602-20619	WASHER, SPRING	1	SN: 330001-UP
28	3EB-55-21120	WOW	1	SN: 330001-UP
29	3EB-55-23210	SWITCH, BACKUP LAMP (FOR TORQUE CONVERTER)	1	SN: 330001-UP
30	3EB-35-22760	NUT, (FOR TORQUE CONVERTER)	1	SN: 330001-UP
31	3EB-55-11270	SWITCH, TURN SIGNAL	1	SN: 330001-UP
32	3EB-55-23510	HORN	1	SN: 330001-UP
33	01010-50816	BOLT	1	SN: 330001-UP
34	01602-20825	WASHER, SPRING	1	SN: 330001-UP

Catalog signs: ☐ part above may be used instead

Reference: 1601D

Open this exact parts catalogue on K-Part

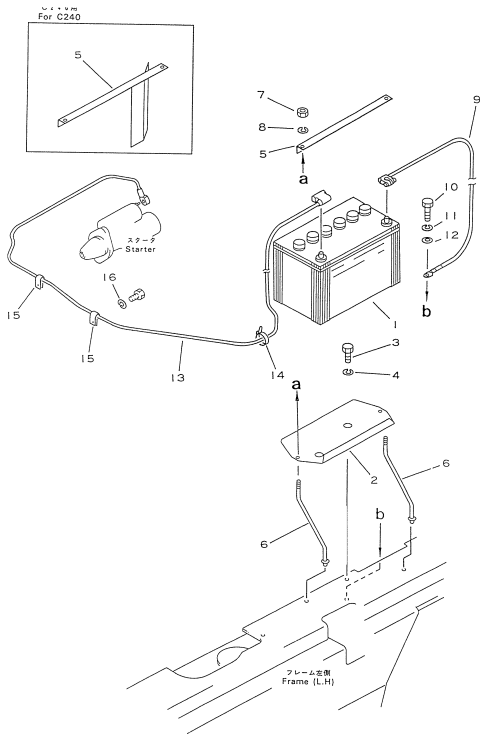

Reference: 1602A

030070 ELECTRICAL SYSTEM (2/3)

Item	Part No.	Part Name	Qty	Options
1	3EB-55-13220	BATTERY	1	SN: 330001-UP
2	3EB-55-24421	HOLDA	1	SN: 330001-UP
3	01010-50814	BOLT	2	SN: 330001-UP
4	01602-20825	WASHER, SPRING	2	SN: 330001-UP
5	3EA-55-24420	ANGLE	1	SN: 330001-UP
6	34B-55-35120	CLAMP	2	SN: 330001-UP
7	01580-10605	NAT	2	SN: 330001-UP
8	01641-20608	WASHER	2	SN: 330001-UP
9	3EB-55-24560	CABLE (-)	1	SN: 330001-UP
10	01010-50812	BOLT	1	SN: 330001-UP
11	01602-20825	WASHER, SPRING	1	SN: 330001-UP
12	01641-20812	WASHER	1	SN: 330001-UP
13	3EA-55-24410	CABLE (+)	1	SN: 330001-UP
14	37B-1AE-6010	BAND	7	SN: 330001-UP
15	08036-01414	CLIP	2	SN: 330001-UP
16	01602-21030	WASHER, SPRING	2	SN: 330001-UP

Reference: 1602A

Open this exact parts catalogue on K-Part

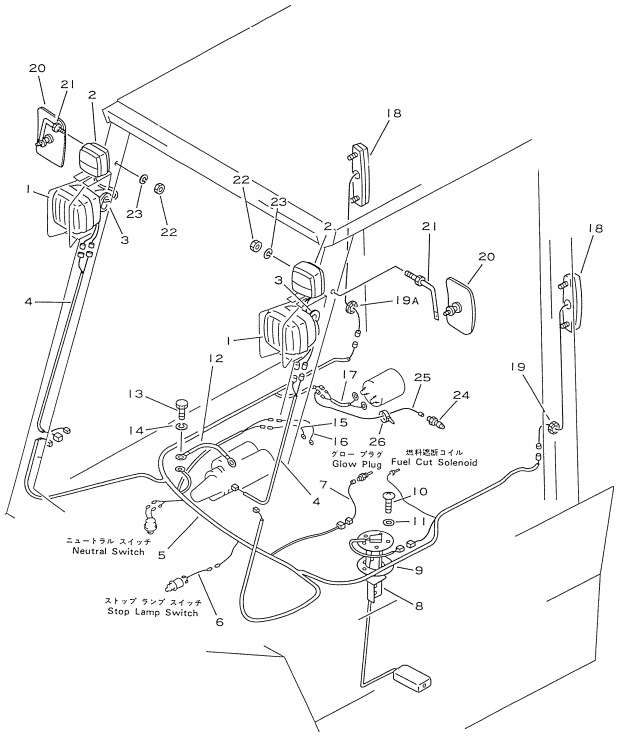

Reference: 1603B

030080 ELECTRICAL SYSTEM (3/3)

Item	Part No.	Part Name	Qty	Options
1	37B-1AE-1010	LAMP ASSEMBLY, HEAD	2	SN: 330001-UP
	3EB-55-11220	• LENS	1	SN: 330001-UP
	08103-01235	• LAMP, 35W	1	SN: 330001-UP
2	37B-1EH-2010	COMBINATION LAMP ASSEMBLY, TURN SIGNAL	2	SN: 330001-UP
	08105-01220	• ELECTRIC HEATER, 23W	1	SN: 330001-UP
	3EB-55-11290	• BULB, 8W	1	SN: 330001-UP
	3EB-55-11240	• LENS, FRONT	1	SN: 330001-UP
	3EB-55-11250	• LENS, REAR	1	SN: 330001-UP
3	3EB-55-23370	COVER	2	SN: 330001-UP
4	3EB-55-23421	WOW	2	SN: 330001-UP
5	3EA-55-22312	WIRING HARNESS	1	SN: 330001-UP
6	3EA-55-14710	WIRE, (FOR TORQUE CONVERTER)	1	SN: 330001-UP
7	3EB-55-22660	WOW	1	SN: 330001-UP
8	3EA-55-23510	SENSOR ASSEMBLY	1	SN: 330001-UP
9	324-06-11330	PACKING	1	SN: 330001-UP
10	01220-40512	SCREW	5	SN: 330001-UP
11	3SB-55-11380	GASKET	5	SN: 330001-UP
12	3EB-55-24580	CABLE, EARTH	1	SN: 330001-UP
13	01010-50812	BOLT	1	SN: 330001-UP
14	01602-20825	WASHER, SPRING	1	SN: 330001-UP
15	3EB-55-22240	WOW	1	SN: 330001-UP
16	3EB-55-22690	CABLE	1	SN: 330001-UP
17	3EB-55-22120	WOW	1	SN: 330001-UP
18	37A-1AE-1010	COMBINATION LAMP ASSEMBLY, REAR	2	SN: 330001-UP
	3EB-55-12322	• LENS	1	SN: 330001-UP
	08104-01220	• ELECTRIC HEATER, 23/8W	1	SN: 330001-UP
	08105-01220	• ELECTRIC HEATER, 23W	1	SN: 330001-UP
	08110-01210	• BULB, 10W	1	SN: 330001-UP
19	3EB-55-23350	GROMMET	1	SN: 330001-UP
19A	3EB-55-23340	GROMMET	1	SN: 330001-UP
20	3EB-55-13571	MIRROR	2	SN: 330001-UP
21	3EB-55-14310	ROD	2	SN: 330001-UP
22	01580-11008	NAT	2	SN: 330001-UP
23	01602-21030	WASHER, SPRING	2	SN: 330001-UP

Open this exact parts catalogue on K-Part

Get the complete PDF catalogue

Komatsu FD14H-15 (JPN) Diesel Engine Forklift S/N 330001-359999 (Japanese)

$89

with PayPal | Store cart: $99

Buy this PDF on Manuals Komatsu

Check the model, serial range and language before payment.

Download instructions are emailed after payment confirmation.

This free sample contains 10 catalogue pages.