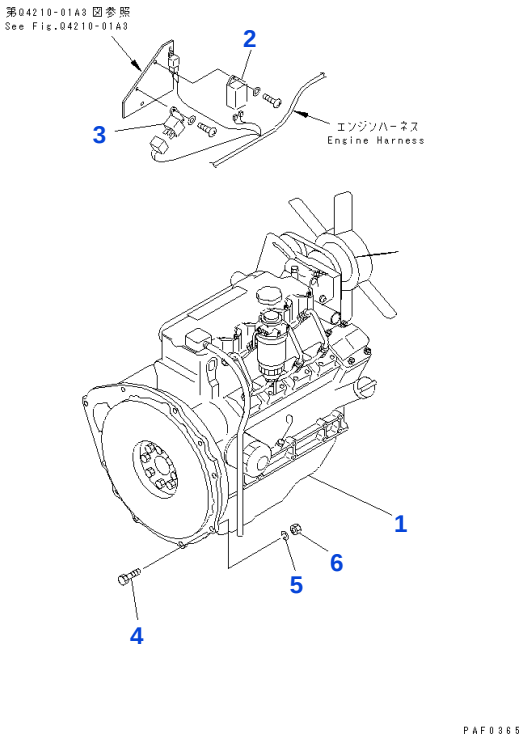

Reference: A4110-01A5

030010 ENGINE UNIT AND POWER TRAIN RELATED PARTS

Item	Part No.	Part Name	Qty	Options
	37A-1DD-3110	ENGINE, 4LB1	1	SN: 600001-UP
1	37A-1DD-3210	• ENGINE	1	SN: 600001-UP
2	3EB-02-31431	• TIMER, QOS	1	SN: 613377-UP
	3EB-02-31430	• ☐ TIMER, QOS	1	SN: 600001-613376
3	3EB-02-31440	• RELAY, QOS	1	SN: 600001-UP
4	01010-81050	BOLT	8	SN: 600001-UP
5	01602-21030	WASHER, SPRING	8	SN: 600001-UP
6	01580-11008	NAT	8	SN: 600001-UP

Catalog signs: ☐ part above may be used instead

Reference: A4110-01A5

Open this exact parts catalogue on K-Part

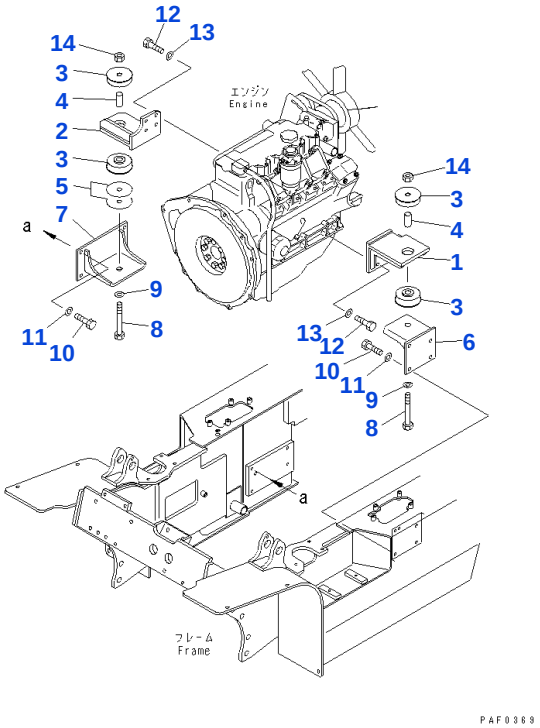

Reference: A4120-01A5

030020 ENGINE MOUNTING PARTS (#600001-619722)

Item	Part No.	Part Name	Qty	Options
1	3EB-02-36510SA	BRACKET, LEFT	1	SN: 600001-@
2	3EB-02-36520SA	BRACKET, RIGHT	1	SN: 600001-@
3	3EB-01-31540	RUBBER	4	SN: 600001-@
4	3EB-01-31550	COLLAR	2	SN: 600001-@
5	3EB-01-31560	SHIM, 1.0MM	3	SN: 600001-@
6	3EA-01-31570SA	BRACKET, LEFT	1	SN: 600001-619722
7	3EA-02-36580SA	BRACKET, RIGHT	1	SN: 600001-619722
8	01010-81495	BOLT	2	SN: 600001-@
9	01643-31445	WASHER	2	SN: 600001-@
10	01010-81025	BOLT	8	SN: 600001-619722
11	01643-31032	WASHER	8	SN: 600001-619722
12	01010-81030	BOLT	8	SN: 600001-@
13	01643-31032	WASHER	8	SN: 600001-@
14	3EB-50-13180	U NUT	2	SN: 600001-@

Reference: A4120-01A5

Open this exact parts catalogue on K-Part

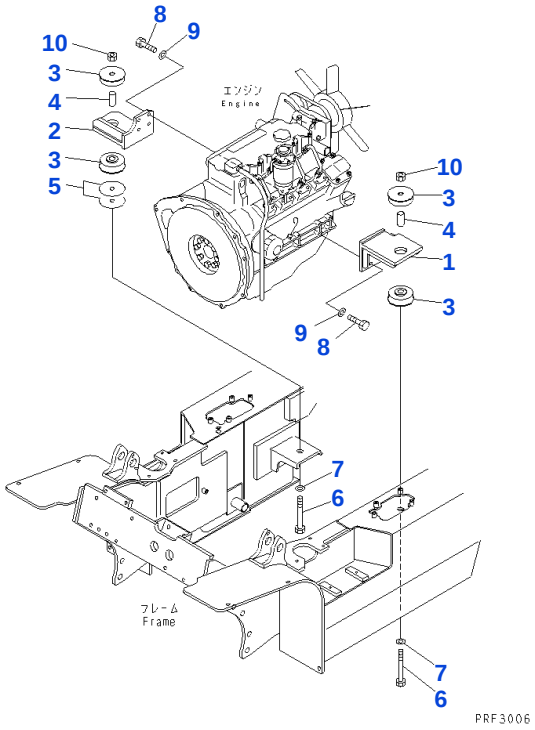

Reference: A4120-01A5A

030030 ENGINE MOUNTING PARTS (#619723-)

Item	Part No.	Part Name	Qty	Options
1	3EB-02-36510SA	BRACKET, LEFT	1	SN: 600001-UP
2	3EB-02-36520SA	BRACKET, RIGHT	1	SN: 600001-UP
3	3EB-01-31640	RUBBER	4	SN: 622001-UP
	3EB-01-31540	RUBBER	4	SN: 600001-622000
4	3EB-01-31680	COLLAR	2	SN: 622001-UP
	3EB-01-31550	COLLAR	2	SN: 600001-622000
5	3EB-01-31560	SHIM, 1.0MM	3	SN: 600001-UP
6	01011-81405	BOLT	2	SN: 622001-UP
	01010-81495	BOLT	2	SN: 600001-622000
7	01643-31445	WASHER	2	SN: 600001-UP
8	01010-81030	BOLT	8	SN: 600001-UP
9	01643-31032	WASHER	8	SN: 600001-UP
10	3EB-50-13180	U NUT	2	SN: 600001-UP

Reference: A4120-01A5A

Open this exact parts catalogue on K-Part

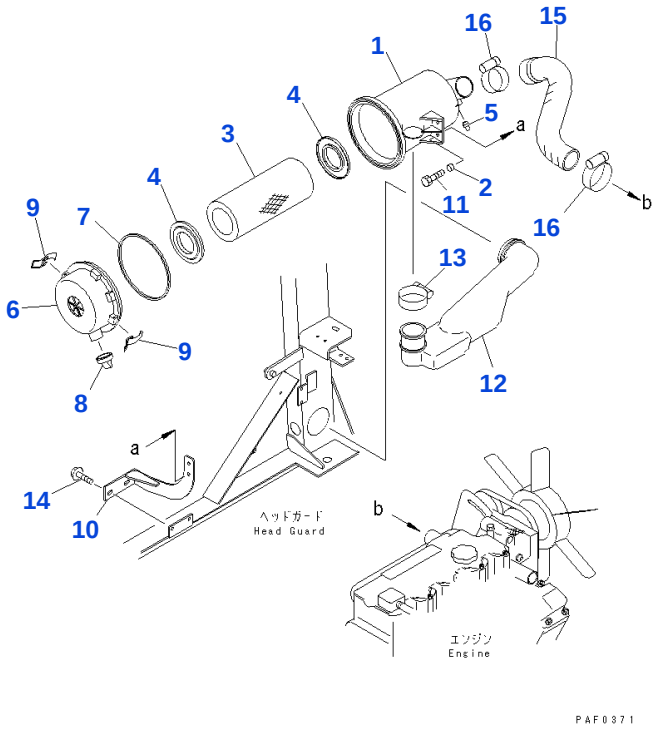

Reference: A4140-01A5

030040 AIR INTAKE CONNECTION

Item	Part No.	Part Name	Qty	Options
	37A-1CA-3010	CLEANER ASSEMBLY, AIR	1	SN: 600001-UP
1	3EA-01-31810	• BODY ASSEMBLY	1	SN: 600001-UP
2	3EA-01-31820	• COLLAR	2	SN: 600001-UP
3	3EA-01-31830	• ELEMENT ASSEMBLY	1	SN: 600001-UP
4	3EA-01-31840	• PACKING	2	SN: 600001-UP
5	3EA-01-31850	• PLUG	1	SN: 600001-UP
	3EA-01-31750	• COVER ASSEMBLY	1	SN: 600001-UP
6	3EA-01-31760	• • COVER	1	SN: 600001-UP
7	3EA-01-31770	• • PACKING	1	SN: 600001-UP
8	3EA-01-31780	• VALVE	1	SN: 600001-UP
9	3EA-01-31790	• CLIP	2	SN: 600001-UP
10	3EA-01-31730	BRACKET	1	SN: 600001-UP
11	01010-80812	BOLT	2	SN: 600001-UP
12	3EB-01-31740	HOSE	1	SN: 600001-UP
13	07280-05729	CLAMP	1	SN: 600001-UP
14	F1210-40820	BOLT	2	SN: 600001-UP
15	3EA-02-36610	HOSE	1	SN: 600001-UP
16	07281-00709	CLAMP	2	SN: 600001-UP

Reference: A4140-01A5

Open this exact parts catalogue on K-Part

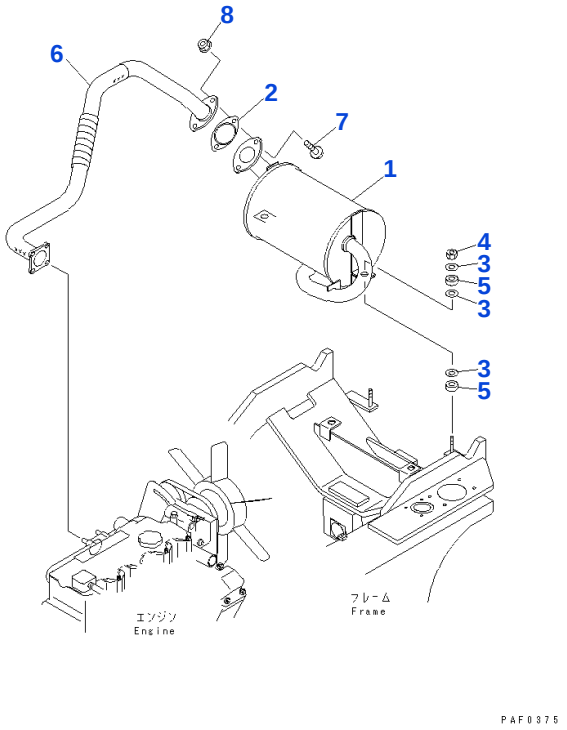

Reference: B4110-01A5

060010 MUFFLER AND EXHAUST CONNECTION

Item	Part No.	Part Name	Qty	Options
1	3EA-03-31111	MUFFLER	1	SN: .-UP
	3EA-03-31110	☐ MUFFLER	1	SN: 600001-.
2	3EA-03-31120	GASKET	1	SN: 600001-UP
3	3EA-51-11390	WASHER	6	SN: 600001-UP
4	01598-11011	NAT	2	SN: 600001-UP
5	3EB-03-31140	RUBBER	4	SN: 600001-UP
6	3EA-03-36510	PIPE	1	SN: 600001-UP
7	01435-01025	BOLT	2	SN: 600001-UP
8	01584-01008	NAT	2	SN: 600001-UP

Catalog signs: ☐ part above may be used instead

Reference: B4110-01A5

Open this exact parts catalogue on K-Part

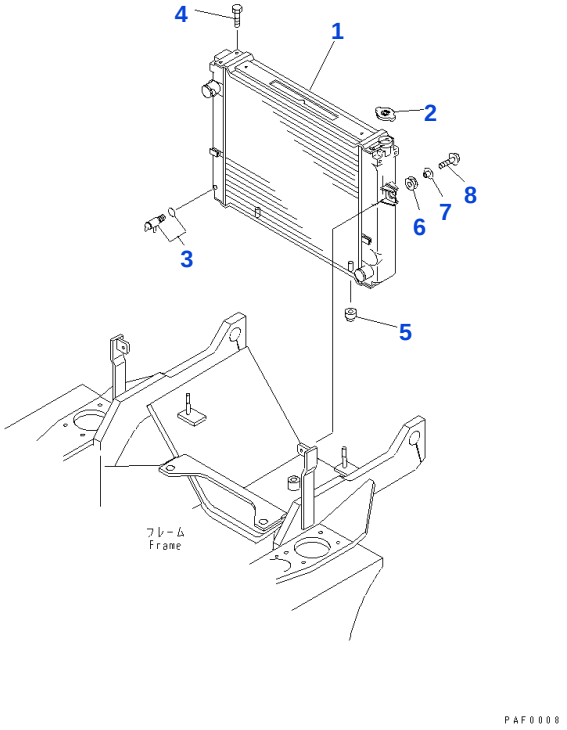

Reference: C4110-01A0

090010 RADIATOR (WITH CLUTCH)(#600001-618331)

Item	Part No.	Part Name	Qty	Options
1	3EA-04-31110	RADIATOR	1	SN: 600001-618331
2	3EB-04-21130	• CAP	1	SN: 600001-618331
3	3EB-04-31120	• COCK ASSEMBLY	1	SN: 600001-618331
4	01010-80816	• BOLT	4	SN: 600001-618331
5	3EB-04-31160	RUBBER	2	SN: 600001-@
6	3EB-04-31170	RUBBER	2	SN: 600001-@
7	3EB-04-31180	COLLAR	2	SN: 600001-@
8	F1210-40830	BOLT	2	SN: 600001-@

Reference: C4110-01A0

Open this exact parts catalogue on K-Part

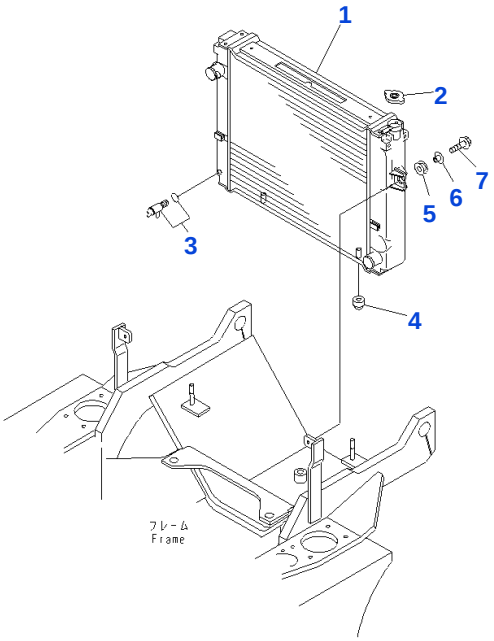

Reference: C4110-01A0A

090020 RADIATOR (FOR CLUTCH)(#618332-)

Item	Part No.	Part Name	Qty	Options
1	3EA-04-31112	RADIATOR	1	SN: 622001-UP
	3EA-04-31111	RADIATOR	1	SN: 618332-622000
2	3EB-04-21130	• CAP	1	SN: 618332-UP
3	3EB-04-31140	• COCK ASSEMBLY	1	SN: 618332-UP
4	3EB-04-31160	RUBBER	2	SN: 600001-UP
5	3EB-04-31170	RUBBER	2	SN: 600001-UP
6	3EB-04-31180	COLLAR	2	SN: 600001-UP
7	F1210-40830	BOLT	2	SN: 600001-UP

Reference: C4110-01A0A

Open this exact parts catalogue on K-Part

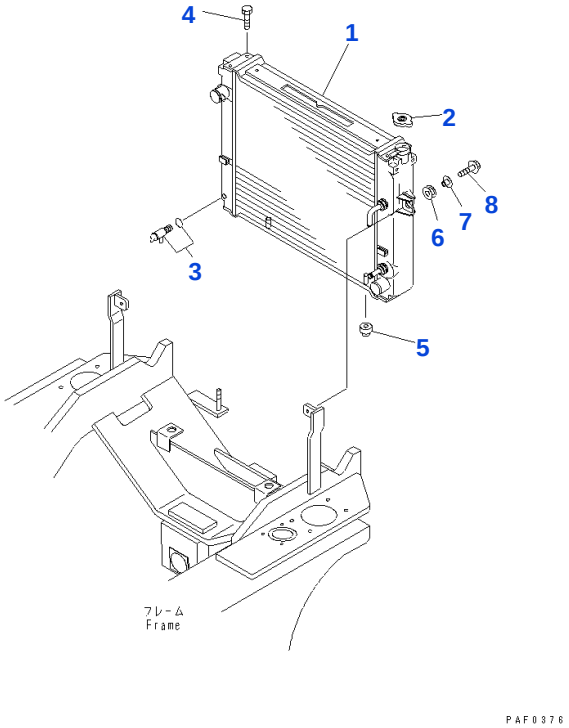

Reference: C4110-01A1

090030 RADIATOR (FOR TORQUE CONVERTER)(#600001-618331)

Item	Part No.	Part Name	Qty	Options
1	3EA-04-31210	RADIATOR	1	SN: 600001-618331
2	3EB-04-31130	• CAP	1	SN: 600001-618331
3	3EB-04-31120	• COCK ASSEMBLY	1	SN: 600001-618331
4	01010-80816	• BOLT	4	SN: 600001-618331
5	3EB-04-31160	RUBBER	2	SN: 600001-@
6	3EB-04-31170	RUBBER	2	SN: 600001-@
7	3EB-04-31180	COLLAR	2	SN: 600001-@
8	F1210-40830	BOLT	2	SN: 600001-@

Reference: C4110-01A1

Open this exact parts catalogue on K-Part

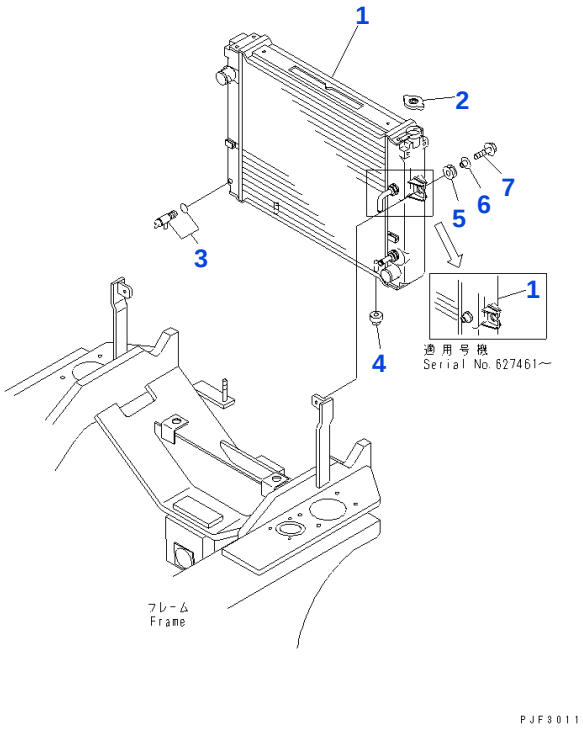

Reference: C4110-01A1A

090040 RADIATOR (FOR TORQUE CONVERTER)(#618332-)

Item	Part No.	Part Name	Qty	Options
1	3EA-04-31260	RADIATOR	1	SN: 627461-UP
	3EA-04-31212	RADIATOR	1	SN: 622001-627460
	3EA-04-31211	RADIATOR	1	SN: 618332-622000
2	3EB-04-21130	• CAP	1	SN: 618332-UP
3	3EB-04-31140	• COCK ASSEMBLY	1	SN: 618332-UP
4	3EB-04-31160	RUBBER	2	SN: 600001-UP
5	3EB-04-31170	RUBBER	2	SN: 600001-UP
6	3EB-04-31180	COLLAR	2	SN: 600001-UP
7	F1210-40830	BOLT	2	SN: 600001-UP

Reference: C4110-01A1A

Open this exact parts catalogue on K-Part

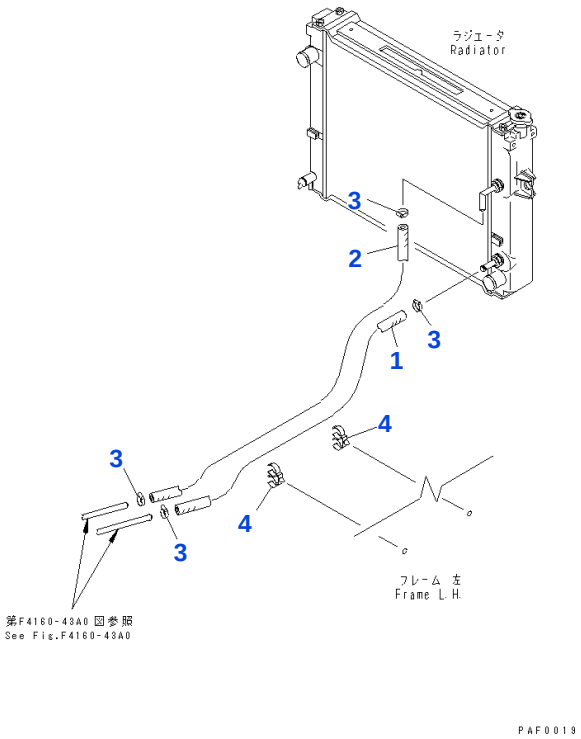

Reference: C4140-01A0

090050 TORQUE CONVERTER OIL COOLER PIPING (#600001-627298)

Item	Part No.	Part Name	Qty	Options
1	37B-1PS-2021	HOSE	1	SN: 600001-@
2	37B-1PS-2101	HOSE	1	SN: 600001-627298
3	07281-00259	CLAMP	4	SN: 600001-627298
4	3EB-04-24190	CLAMP	2	SN: 600001-@

Reference: C4140-01A0

Open this exact parts catalogue on K-Part

Get the complete PDF catalogue

Komatsu FD10L-16 (JPN) Diesel Engine Forklift S/N 600001-630000 (Japanese)

$89

with PayPal | Store cart: $99

Buy this PDF on Manuals Komatsu

Check the model, serial range and language before payment.

Download instructions are emailed after payment confirmation.

This free sample contains 10 catalogue pages.