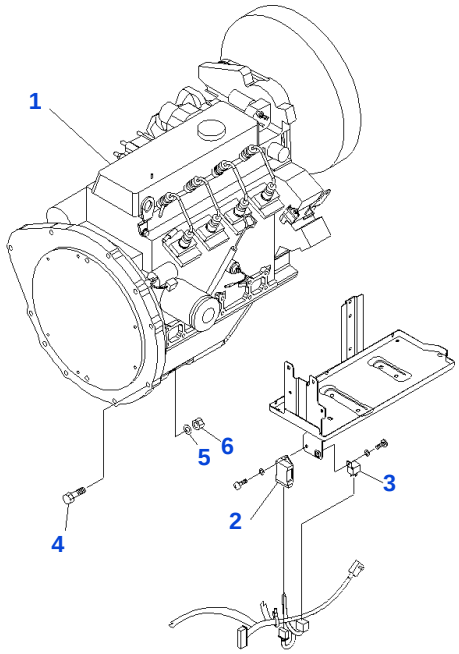

PYFT327

Reference: A4110-01A2

030010 ENGINE UNIT (WITH DRY CLUTCH AND TORQUE CONVERTER) (#650001-668499)

Item	Part No.	Part Name	Qty	Options
	37A-1DD-3111	ENGINE 4LB1	1	SN: 650001-668499
1	37A-1DD-3210	• ENGINE	1	SN: 650001-668499
2	3EB-02-31431	• TIMER	1	SN: 650001-668499
3	3EB-02-31440	• RELAY	1	SN: 650001-668499
4	01010-81050	BOLT	8	SN: 650001-668499
5	01602-21030	WASHER, SPRING	8	SN: 650001-668499
6	01580-11008	NAT	8	SN: 650001-668499

Reference: A4110-01A2

Open this exact parts catalogue on K-Part

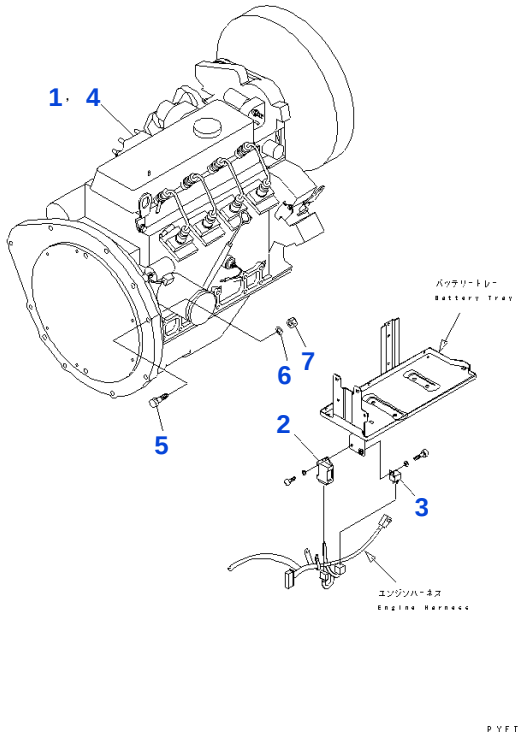

Reference: A4110-11P2

030020 ENGINE UNIT (FOR DRY CLUTCH AND TORQUE CONVERTER) (HIGH SPEED FA?

Item	Part No.	Part Name	Qty	Options
	37A-1DD-3161	ENGINE, 4LB1	1	SN: 650001-668499
	37A-1DD-3111	• ENGINE 4LB1,4LB1	1	SN: 650001-668499
1	37A-1DD-3210	• • ENGINE, 4LB1	1	SN: 650001-668499
2	3EB-02-31431	• • TIMER	1	SN: 650001-668499
3	3EB-02-31440	• • RELAY	1	SN: 650001-668499
4	3EA-02-31240	• PULLEY	1	SN: 650001-668499
5	01010-81050	BOLT	8	SN: 650001-668499
6	01602-21030	WASHER, SPRING	8	SN: 650001-668499
7	01580-11008	NAT	8	SN: 650001-668499

Reference: A4110-11P2

Open this exact parts catalogue on K-Part

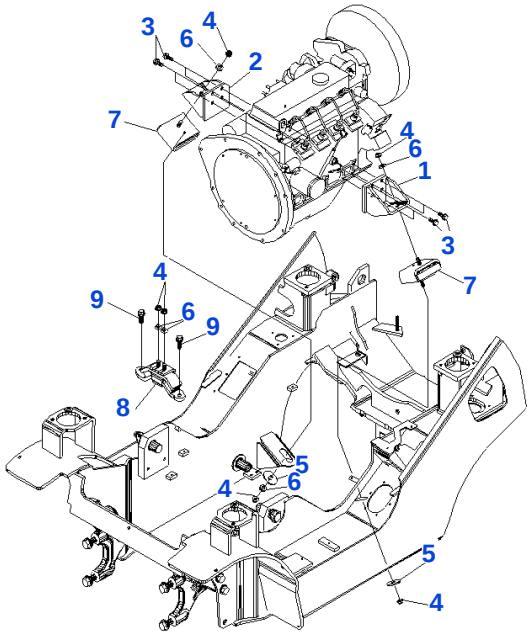

PYFT171

Reference: A4120-01A2

030030 ENGINE MOUNTING PARTS(#650001-668499)

Item	Part No.	Part Name	Qty	Options
1	3EA-02-52711	BRACKET, LEFT	1	SN: 660774-668499
	3EA-02-52710	☐ BRACKET, LEFT	1	SN: 650001-660773
2	3EA-02-52721	BRACKET, RIGHT	1	SN: 660774-668499
	3EA-02-52720	☐ BRACKET, RIGHT	1	SN: 650001-660773
3	01010-81030	BOLT	8	SN: 650001-668499
	01643-31032	WASHER	8	SN: 650001-668499
4	3EB-01-51380	U NUT	6	SN: 653985-668499
	34A-01-35120	U NUT	6	SN: 650001-653984
5	3EB-01-51190	WASHER	2	SN: 650001-668499
6	01643-31232	WASHER	6	SN: 650001-668499
7	3EB-01-51131	MOUNT	2	SN: 660774-668499
	3EB-01-51130	☐ MOUNT	2	SN: 650001-660773
8	3EB-02-52130	MOUNT	1	SN: 650001-668499
9	3EA-71-12790	BOLT	2	SN: 650001-668499

Catalog signs: ☐ part above may be used instead

Reference: A4120-01A2

Open this exact parts catalogue on K-Part

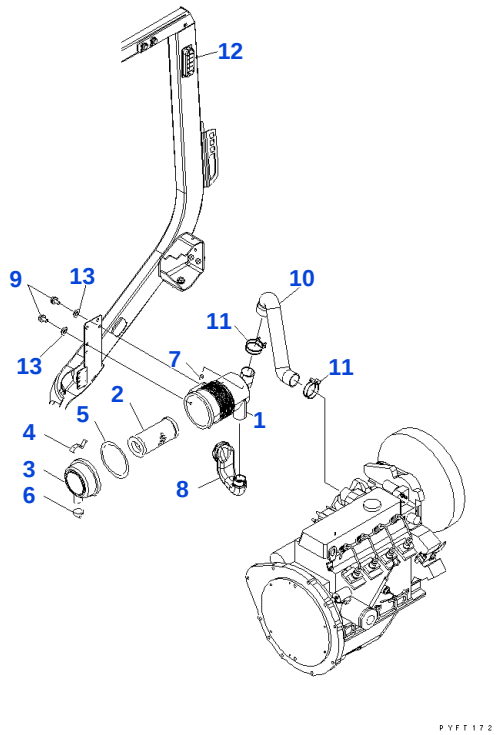

Reference: A4140-01A2

030040 AIR INTAKE CONNECTION (#650001-668499)

Item	Part No.	Part Name	Qty	Options
	3EB-01-41710	AIR CLEANER ASSEMBLY	1	SN: 650001-668499
1	3EB-01-48720	• BODY ASSEMBLY	1	SN: 650001-668499
2	3EB-01-38730	• ELEMENT ASSEMBLY	1	SN: 650001-668499
3	3EB-01-48740	• COVER	1	SN: 650001-668499
4	3EB-01-48750	• LATCH	2	SN: 650001-668499
5	3EB-01-48760	• GASKET	1	SN: 650001-668499
6	3EB-02-44770	• VALVE	1	SN: 650001-668499
7	3EB-02-34780	• CAP	1	SN: 650001-668499
8	3EB-01-51270	HOSE	1	SN: 650001-668499
9	01010-80820	BOLT	2	SN: 650001-668499
	01643-30823	WASHER	2	SN: 650001-668499
10	3EA-02-52310	HOSE	1	SN: 650001-668499
11	07280-05729	CLAMP	2	SN: 650001-668499
12	3EB-01-45170	COVER	1	SN: 650001-668499
13	34A-42-41130	WASHER	2	SN: 650001-668499

Reference: A4140-01A2

Open this exact parts catalogue on K-Part

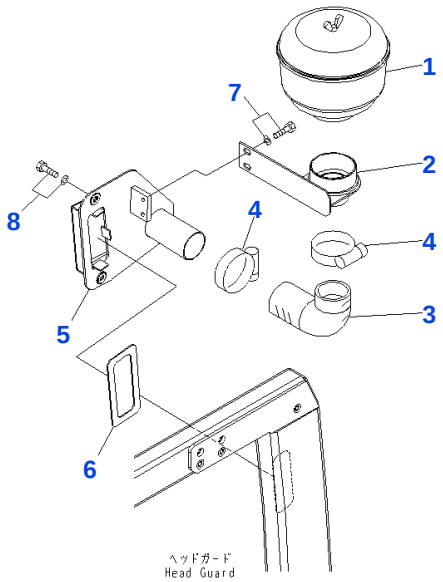

PWF7510

Reference: A4140-02P0B

030050 INTERNAL TYPE PRE-CLEANER

Item	Part No.	Part Name	Qty	Options
1	3EC-01-33310	PULLEY CLEANER	1	SN: 650001-UP
2	3EB-01-47710XC	BRACKET	1	SN: 650001-UP
3	3EB-02-14830	HOSE	1	SN: 650001-UP
4	07281-00709	CLAMP	2	SN: 650001-UP
5	3EB-01-47720XC	BRACKET	1	SN: 650001-UP
6	3EB-01-47730	GASKET	1	SN: 650001-UP
7	01010-80816	BOLT	2	SN: 650001-UP
	01643-30823	WASHER	2	SN: 650001-UP
8	01010-80820	BOLT	2	SN: 650001-UP
	01643-30823	WASHER	2	SN: 650001-UP

Reference: A4140-02P0B

Open this exact parts catalogue on K-Part

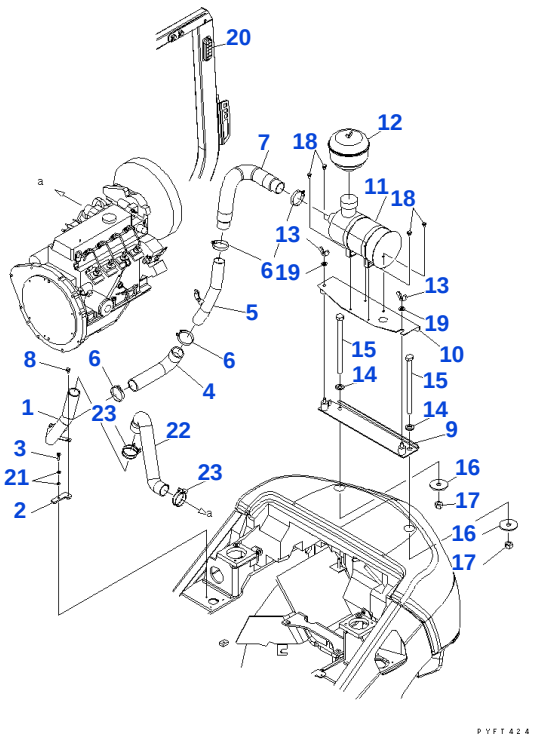

Reference: A4140-11P1

030060 OUTER TYPE PRE CLEANER AND RAIN CAP (1/2)(#650001-668499)

Item	Part No.	Part Name	Qty	Options
1	3EB-01-57310SG	PIPE	1	SN: 650001-668499
2	3EB-01-46550SG	BRACKET	1	SN: 650001-668499
3	01435-00830	BOLT	1	SN: 650001-668499
4	3EB-01-46530	HOSE	1	SN: 650001-668499
5	3EA-01-53210SG	PIPE	1	SN: 650001-668499
6	07281-00709	CLAMP	4	SN: 650001-668499
7	3EA-01-46610	HOSE	1	SN: 650001-668499
8	01010-80816	BOLT	1	SN: 650001-668499
	01643-30823	WASHER	1	SN: 650001-668499
9	3EB-02-47510NK	BRACKET	1	SN: 650001-668499
10	3EA-01-32121NK	BRACKET	1	SN: 661814-668499
	3EA-01-32121YL	☐ BRACKET	1	SN: 656216-661813
	3EA-01-32120YL	BRACKET	1	SN: 650001-656215
11	3EB-02-29610	AIR CLEANER ASSEMBLY	1	SN: 656216-668499
	3EA-01-32210	AIR CLEANER ASSEMBLY	1	SN: 650001-656215
12	3EB-01-57640	PULLEY CLEANER	1	SN: 656216-668499
	3EC-01-33310	PULLEY CLEANER	1	SN: 650001-656215
13	01541-21260	NAT	2	SN: 650001-668499
14	01640-22032	WASHER	2	SN: 650001-668499
15	3EA-05-32530	BOLT	2	SN: 650001-668499
16	3EB-05-13330	WASHER	2	SN: 650001-668499
17	01580-11210	NAT	2	SN: 650001-668499
18	01010-80816	BOLT	4	SN: 650001-668499
	01643-30823	WASHER	4	SN: 650001-668499
19	01643-31232	WASHER	2	SN: 650001-668499
20	3EB-01-45170	COVER	1	SN: 656216-668499
	3EB-01-31761	COVER	1	SN: 650001-656215
21	3EA-66-33581	SEAL WASHER	1	SN: 650001-668499
22	3EA-02-52310	HOSE	1	SN: 650001-668499
23	07281-00609	CLAMP	2	SN: 650001-668499

Catalog signs: ☐ part above may be used instead

Reference: A4140-11P1

Open this exact parts catalogue on K-Part

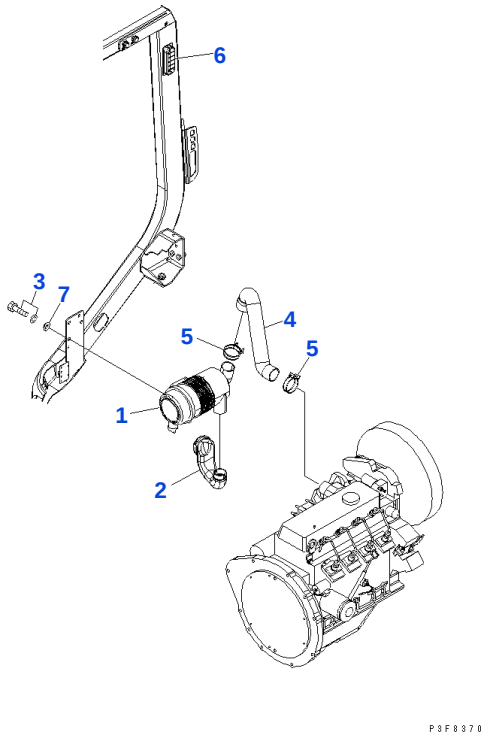

Reference: A4140-11P6

030070 AIR INTAKE CONNECTION (FOR SAFETY CHECKER) (#650001-668499)

Item	Part No.	Part Name	Qty	Options
1	3EB-01-42710	AIR CLEANER ASSEMBLY	1	SN: 650001-668499
2	3EB-01-51270	HOSE	1	SN: 650001-668499
3	01010-80820	BOLT	2	SN: 650001-668499
	01643-30823	WASHER	2	SN: 650001-668499
4	3EA-02-52310	HOSE	1	SN: 650001-668499
5	07280-05729	CLAMP	2	SN: 650001-668499
6	3EB-01-45170	COVER	1	SN: 650001-668499
7	34A-42-41130	WASHER	2	SN: 650001-668499

Reference: A4140-11P6

Open this exact parts catalogue on K-Part

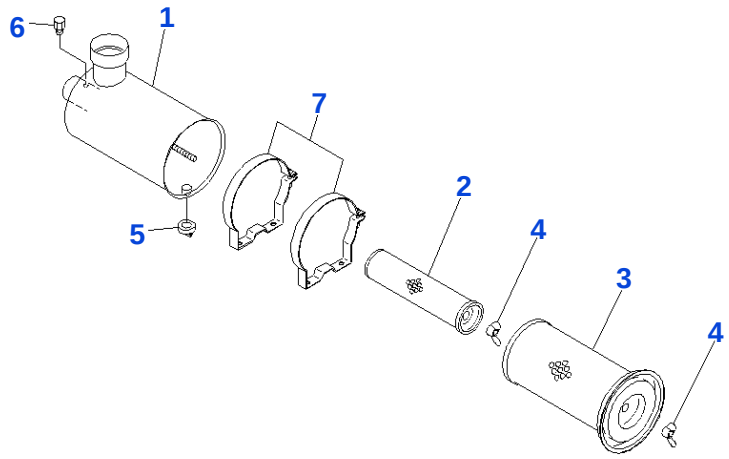

Reference: A4140-12P0

030080 AIR CLEANER INNER PARTS (FOR OUTER TYPE PRE CLEANER) (2/2) (#650001-656215)

Item	Part No.	Part Name	Qty	Options
	3EA-01-32210	AIR CLEANER ASSEMBLY	1	SN: 650001-656215
1	3EA-01-32220	• BODY ASSEMBLY	1	SN: 650001-656215
2	3EB-02-25550	• ELEMENT ASSEMBLY, INNER	1	SN: 650001-656215
3	3EC-01-11630	• ELEMENT ASSEMBLY, OUTER	1	SN: 650001-656215
4	34B-02-31650	• NUT ASSEMBLY, WING	2	SN: 650001-656215
5	3EA-01-17150	• VALVE	1	SN: 650001-656215
6	3EB-02-29490	• CAP	1	SN: 650001-656215
7	3EB-02-25830	• BAND	2	SN: 650001-656215

Reference: A4140-12P0

Open this exact parts catalogue on K-Part

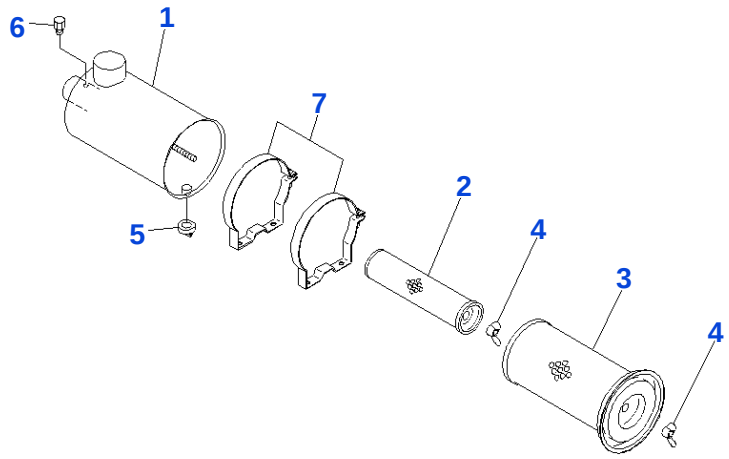

PWF7517

Reference: A4140-12P0A

030090 AIR CLEANER INNER PARTS (FOR OUTER TYPE PRE-CLEANER) (2/2)(#656216-)

Item	Part No.	Part Name	Qty	Options
	3EB-02-29610	AIR CLEANER ASSEMBLY	1	SN: 656216-UP
1		• ☆ BODY ASSEMBLY	1	SN: 656216-UP
2	3EB-02-25550	• ELEMENT ASSEMBLY, INNER	1	SN: 656216-UP
3	3EC-01-11630	• ELEMENT ASSEMBLY, OUTER	1	SN: 656216-UP
4	34B-02-31650	• NUT ASSEMBLY, WING	1	SN: 656216-UP
5	3EA-01-17150	• VALVE	1	SN: 656216-UP
6	3EB-02-29490	• CAP	1	SN: 656216-UP
7	3EB-02-25830	• BAND	2	SN: 656216-UP

Catalog signs: ☆ not supplied separately: assembly only

Reference: A4140-12P0A

Open this exact parts catalogue on K-Part

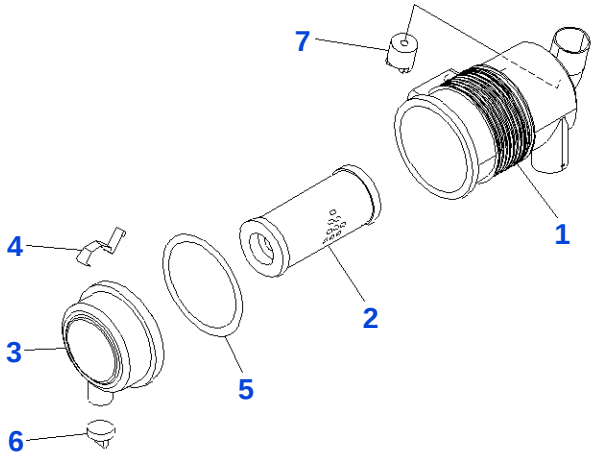

P3F8371

Reference: A4140-12P6

030100 AIR CLEANER INNER PARTS (SAFETY CHECKER SPEC) (#650001-668499)

Item	Part No.	Part Name	Qty	Options
	3EB-01-42710	AIR CLEANER ASSEMBLY	1	SN: 650001-668499
1	3EB-01-48720	• BODY ASSEMBLY	1	SN: 650001-668499
2	3EB-01-38730	• ELEMENT ASSEMBLY	1	SN: 650001-668499
3	3EB-01-48740	• COVER	1	SN: 650001-668499
4	3EB-01-48750	• LATCH	2	SN: 650001-668499
5	3EB-01-48760	• GASKET	1	SN: 650001-668499
6	3EB-02-44770	• VALVE	1	SN: 650001-668499
7	3EB-01-32721	• INDICATOR	1	SN: 650001-668499

Reference: A4140-12P6

Open this exact parts catalogue on K-Part

Get the complete PDF catalogue

Komatsu FD10L-20 (JPN) Diesel Engine Forklift S/N 650001-699999 (Japanese)

$89

with PayPal | Store cart: $99

Buy this PDF on Manuals Komatsu

Check the model, serial range and language before payment.

Download instructions are emailed after payment confirmation.

This free sample contains 10 catalogue pages.