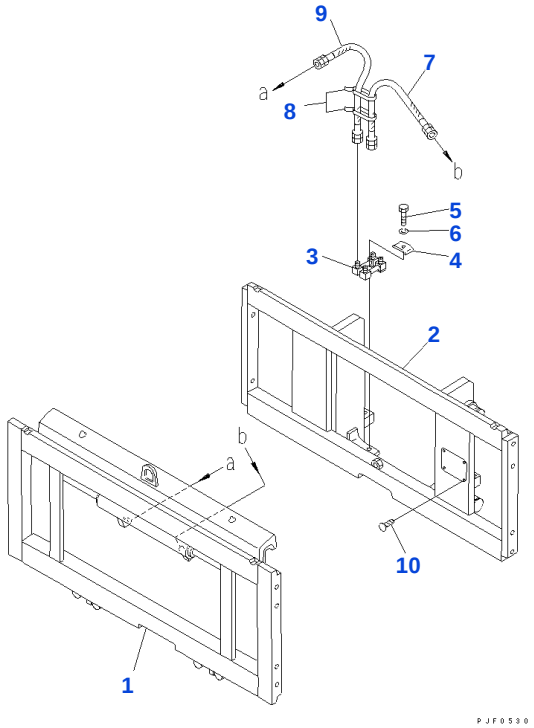

Reference: T4010-01A2

030010 FORK CARRIAGE

Item	Part No.	Part Name	Qty	Options
1	45A-1BS-5010	SIDE SHIFTER ASSEMBLY, SIDE COMPONENTS OF THIS ASSEMBLY INCLUDE FIG.T4010-31A0 AND FIG.T4010-32A0.	1	SN: 600001-UP
		• ☆ PLATE, NAME	1	SN: 600001-UP
2	37A-ZQQ-5010	BOARD	1	SN: 600001-UP
3	45B-1FS-3360	PIPE	1	SN: 600001-UP
4	45A-5FS-1430	CLAMP	1	SN: 600001-UP
5	01010-80830	BOLT	1	SN: 600001-UP
6	01602-20825	WASHER, SPRING	1	SN: 600001-UP
7	34B-66-11270	HOSE	1	SN: 600001-UP
8	37B-1AE-6010	BAND	2	SN: 600001-UP
9	304-62-31370	HOSE	1	SN: 600001-UP
10	04418-13060	SCREW	4	SN: 600001-UP

Catalog signs: ☆ not supplied separately: assembly only

Reference: T4010-01A2

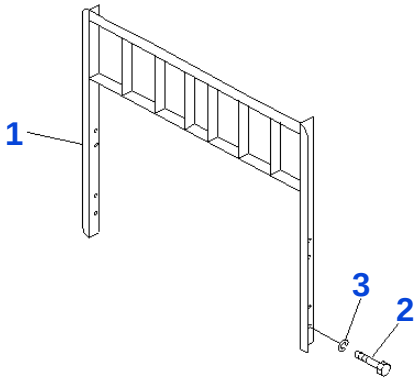

PJF0456

Reference: T4040-01A2

030020 BACK REST

Item	Part No.	Part Name	Qty	Options
1	37A-7G4-3010	GUARD, (970MM WIDTH)	1	SN: 600001-UP
2	01050-81430	BOLT	8	SN: 600001-UP
3	01602-21442	WASHER, SPRING	8	SN: 600001-UP

Reference: T4040-01A2

Open this exact parts catalogue on K-Part

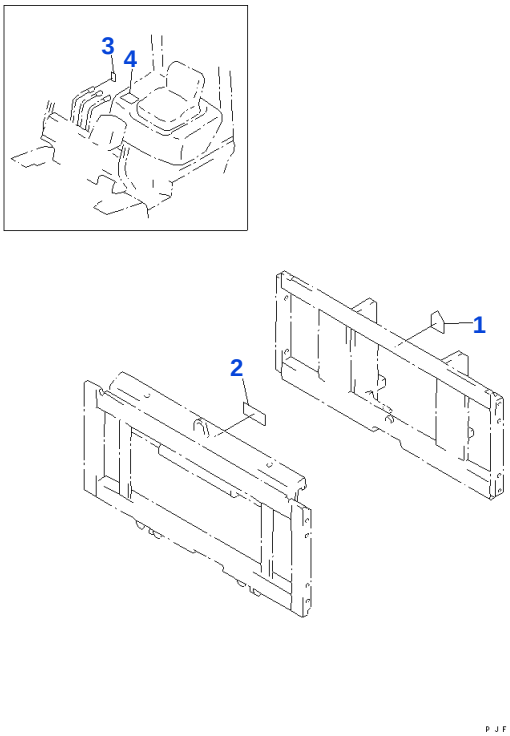

Reference: V4160-01A0

030030 NAME PLATE

Item	Part No.	Part Name	Qty	Options
1	45F-415-3180	PLATE, MARK	1	SN: 600001-UP
2	45B-1FS-1980	PLATE, MARK	1	SN: 600001-UP
3	45B-1FS-3081	PLATE, NAME	1	SN: 600001-UP
4	45A-1FS-3040	PLATE, CUSHION, (JAPANESE)	1	SN: 600001-UP
	540-818-1642	PLATE, CUSHION, (FOR ENGLISH)	1	SN: 600001-UP
	45A-010-1450	PLATE, CUSHION (GERMAN)	1	SN: 600001-UP
	46B-010-2990	PLATE, CUSHION, (CHINA)	1	SN: 600001-UP
	45A-010-2120	PLATE, CAUTION, (SPANISH)	1	SN: 600001-UP
	45A-010-1440	PLATE, CUSHION (FRENCH)	1	SN: 600001-UP
	45C-1FS-1090	PLATE, CUSHION, (FOR RUSSIA)	1	SN: 600001-UP

Reference: V4160-01A0

Open this exact parts catalogue on K-Part

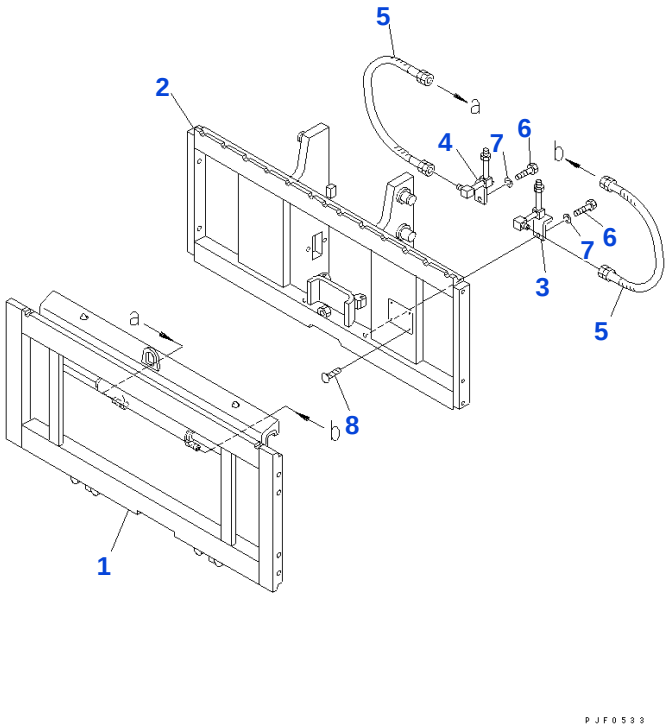

Reference: T4010-11A0

060010 FORK CARRIAGE

Item	Part No.	Part Name	Qty	Options
1	45A-1BS-5010	SIDE SHIFTER ASSEMBLY, SIDE	1	SN: 600001-UP
		COMPONENTS OF THIS ASSEMBLY INCLUDE FIG.T4010-31A0 AND FIG.T4010-32A0.		
		• ☆ PLATE, NAME	1	SN: 600001-UP
2	37A-ZQT-5010	BOARD	1	SN: 600001-UP
3	45A-1BS-5420	PIPE, LEFT	1	SN: 600001-UP
4	45A-1BS-5430	PIPE, RIGHT	1	SN: 600001-UP
5	07123-00204	HOSE	2	SN: 600001-UP
6	01010-80816	BOLT	2	SN: 600001-UP
7	01602-20825	WASHER, SPRING	2	SN: 600001-UP
8	04418-13060	SCREW	4	SN: 600001-UP

Catalog signs: ☆ not supplied separately: assembly only

Reference: T4010-11A0

Open this exact parts catalogue on K-Part

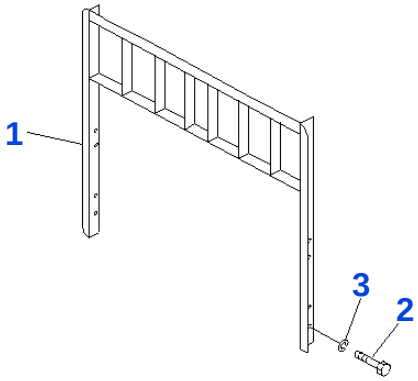

PJF0456

Reference: T4040-01A3

060020 BACK REST

Item	Part No.	Part Name	Qty	Options
1	37A-7G4-3010	GUARD, (970MM WIDTH)	1	SN: 600001-UP
2	01050-81430	BOLT	8	SN: 600001-UP
3	01602-21442	WASHER, SPRING	8	SN: 600001-UP

Reference: T4040-01A3

Open this exact parts catalogue on K-Part

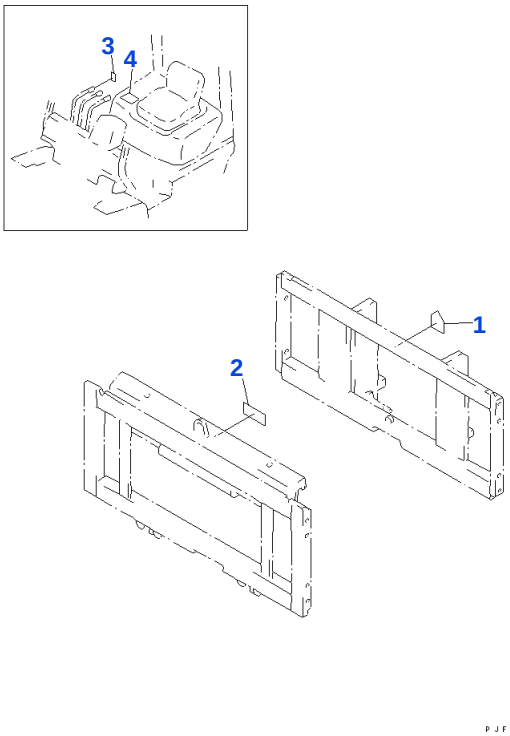

Reference: V4160-01A1

060030 NAME PLATE

Item	Part No.	Part Name	Qty	Options
1	45F-415-3180	PLATE, MARK	1	SN: 600001-UP
2	45B-1FS-1980	PLATE, MARK	1	SN: 600001-UP
3	45B-1FS-3081	PLATE, NAME	1	SN: 600001-UP
4	45A-1FS-3040	PLATE, CUSHION, (JAPANESE)	1	SN: 600001-UP
	540-818-1642	PLATE, CUSHION, (FOR ENGLISH)	1	SN: 600001-UP
	45A-010-1450	PLATE, CUSHION (GERMAN)	1	SN: 600001-UP
	46B-010-2990	PLATE, CUSHION, (CHINA)	1	SN: 600001-UP
	45A-010-2120	PLATE, CAUTION, (SPANISH)	1	SN: 600001-UP
	45A-010-1440	PLATE, CUSHION (FRENCH)	1	SN: 600001-UP
	45C-1FS-1090	PLATE, CUSHION, (FOR RUSSIA)	1	SN: 600001-UP

Reference: V4160-01A1

Open this exact parts catalogue on K-Part

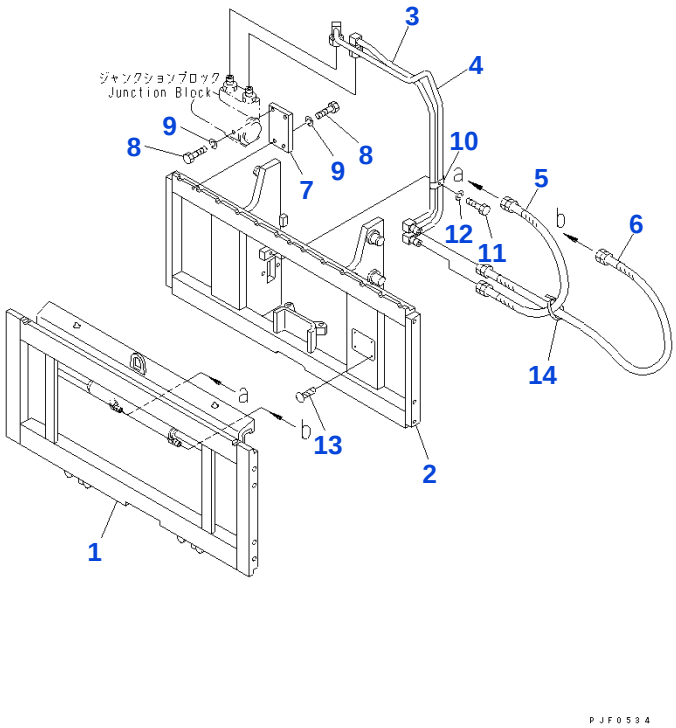

Reference: T4010-21A0

090010 FORK CARRIAGE

Item	Part No.	Part Name	Qty	Options
1	45A-1BS-5010	SIDE SHIFTER ASSEMBLY, SIDE COMPONENTS OF THIS ASSEMBLY INCLUDE FIG.T4010-31A0 AND FIG.T4010-32A0.	1	SN: 600001-UP
		• ☆ PLATE, NAME	1	SN: 600001-UP
2	37A-ZQX-5010	BOARD	1	SN: 600001-UP
3	45A-1BS-5320	PIPE	1	SN: 600001-UP
4	45A-1BS-5330	PIPE	1	SN: 600001-UP
5	07123-00204	HOSE	1	SN: 600001-UP
6	07123-00206	HOSE	1	SN: 600001-UP
7	45B-5FS-3780	BRACKET	1	SN: 600001-UP
8	01010-81025	BOLT	4	SN: 600001-UP
9	01602-21030	WASHER, SPRING	4	SN: 600001-UP
10	304-826-1770	CLIP	1	SN: 600001-UP
11	01010-80825	BOLT	1	SN: 600001-UP
12	01602-20825	WASHER, SPRING	1	SN: 600001-UP
13	04418-13060	SCREW	4	SN: 600001-UP
14	37B-1AE-6010	BAND	2	SN: 600001-UP

Catalog signs: ☆ not supplied separately: assembly only

Reference: T4010-21A0

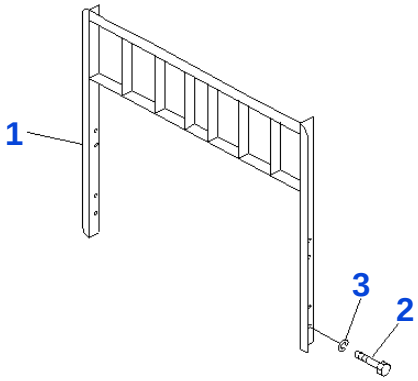

PJF0456

Reference: T4040-01A4

090020 BACK REST

Item	Part No.	Part Name	Qty	Options
1	37A-7G4-3010	GUARD, (970MM WIDTH)	1	SN: 600001-UP
2	01050-81430	BOLT	8	SN: 600001-UP
3	01602-21442	WASHER, SPRING	8	SN: 600001-UP

Reference: T4040-01A4

Open this exact parts catalogue on K-Part

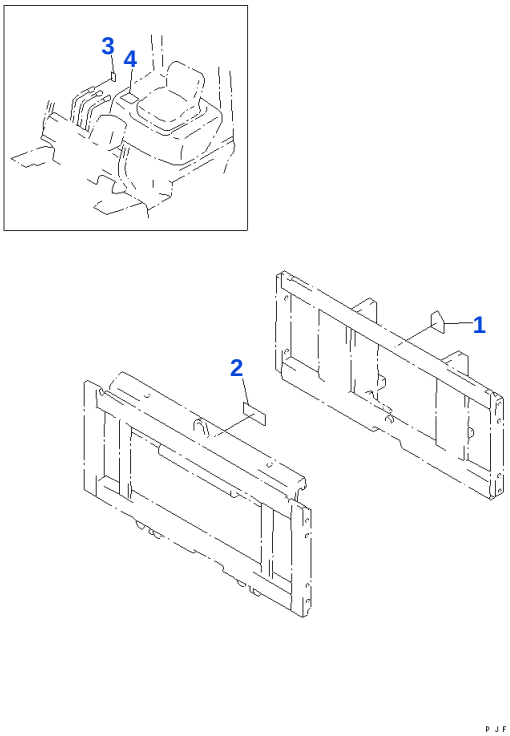

Reference: V4160-01A2

090030 NAME PLATE

Item	Part No.	Part Name	Qty	Options
1	45F-415-3180	PLATE, MARK	1	SN: 600001-UP
2	45B-1FS-1980	PLATE, MARK	1	SN: 600001-UP
3	45B-1FS-3081	PLATE, NAME	1	SN: 600001-UP
4	45A-1FS-3040	PLATE, CUSHION, (JAPANESE)	1	SN: 600001-UP
	540-818-1642	PLATE, CUSHION, (FOR ENGLISH)	1	SN: 600001-UP
	45A-010-1450	PLATE, CUSHION (GERMAN)	1	SN: 600001-UP
	46B-010-2990	PLATE, CUSHION, (CHINA)	1	SN: 600001-UP
	45A-010-2120	PLATE, CAUTION, (SPANISH)	1	SN: 600001-UP
	45A-010-1440	PLATE, CUSHION (FRENCH)	1	SN: 600001-UP
	45C-1FS-1090	PLATE, CUSHION, (FOR RUSSIA)	1	SN: 600001-UP

Reference: V4160-01A2

Open this exact parts catalogue on K-Part

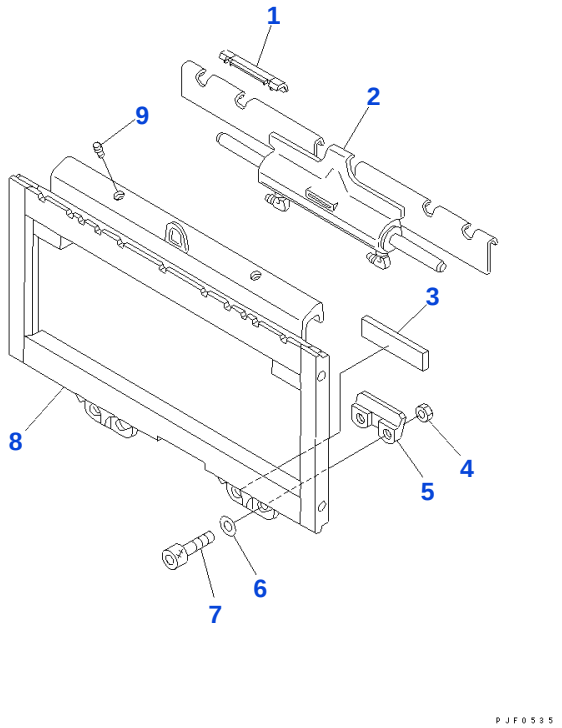

Reference: T4010-31A0

120010 FORK CARRIAGE

Item	Part No.	Part Name	Qty	Options
1	CC204187	BEARING, UPPER	2	SN: 600001-UP
2	CC205848	CYLINDER, (620MM STROKE)	1	SN: 600001-UP
	CC205840	CYLINDER, (665MM WIDTH)	1	SN: 600001-UP
	CC205841	CYLINDER, (735MM WIDTH)	1	SN: 600001-UP
	CC205842	CYLINDER, (810MM WIDTH)	1	SN: 600001-UP
	CC205845	CYLINDER, (895MM WIDTH)	1	SN: 600001-UP
3	CC204188	BEARING, LOWER	2	SN: 600001-UP
4	CC553857	NAT	4	SN: 600001-UP
5	CC204186	LOWER HOOK, LOWER	2	SN: 600001-UP
6	CC667225	WASHER	4	SN: 600001-UP
7	CC639121	BOLT	4	SN: 600001-UP
8		☆ FRAME	1	SN: 600001-UP
9	CC7403	FITTING, GREASE	2	SN: 600001-UP

Catalog signs: ☆ not supplied separately: assembly only

Reference: T4010-31A0

Open this exact parts catalogue on K-Part

Get the complete PDF catalogue

Komatsu FD10L-16AT (JPN) Forklift Attachment Parts FD10L-15L-AT S/N 600001-630000 (Japanese)

$89

with PayPal | Store cart: $99

Buy this PDF on Manuals Komatsu

Check the model, serial range and language before payment.

Download instructions are emailed after payment confirmation.

This free sample contains 10 catalogue pages.