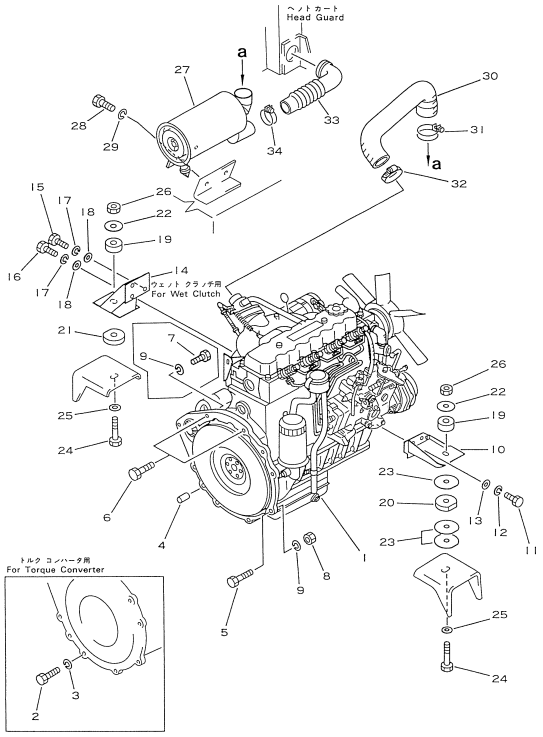


Reference: 1061A

# 030010 ENGINE MOUNTING PARTS

| Item | Part No. | Part Name | Qty | Options |
|---|---|---|---|---|
| 1 | 37B-1DG-2040 | ENGINE, (FOR DRY CLUTCH) | 1 | SN: 330001-UP |
| | 37B-1DG-2050 | ENGINE, (FOR TORQUE CONVERTER) | 1 | SN: 330001-UP |
| 2 | 01010-50816 | BOLT, (FOR TORQUE CONVERTER) | 8 | SN: 330001-UP |
| 3 | 01602-20825 | WASHER, SPRING (FOR TORQUE CONVERTER) | 8 | SN: 330001-UP |
| 4 | 04020-01228 | PIN, DOWEL | 2 | SN: 330001-UP |
| 5 | 01010-51045 | BOLT | 6 | SN: 330001-UP |
| 6 | 01010-51050 | BOLT | 2 | SN: 330001-UP |
| 8 | 01580-11008 | NAT | 8 | SN: 330001-UP |
| 9 | 01602-21030 | WASHER, SPRING | 8 | SN: 330001-UP |
| 10 | 3EA-02-24210 | BRACKET, LEFT | 1 | SN: 330001-UP |
| 11 | 01050-51035 | BOLT | 4 | SN: 330001-UP |
| 12 | 01602-21030 | WASHER, SPRING | 4 | SN: 330001-UP |
| 13 | 01643-31032 | WASHER | 4 | SN: 330001-UP |
| 14 | 3EA-02-24240 | BRACKET, RIGHT | 1 | SN: 330001-UP |
| 15 | 37A-101-1040 | BOLT | 1 | SN: 330001-UP |
| 16 | 01050-51030 | BOLT | 2 | SN: 330001-UP |
| 17 | 01602-21030 | WASHER, SPRING | 3 | SN: 330001-UP |
| 18 | 01643-31032 | WASHER | 3 | SN: 330001-UP |
| 19 | 3EB-01-27140 | RUBBER | 2 | SN: 330001-UP |
| 20 | 3EA-02-24220 | RUBBER | 1 | SN: 330001-UP |
| 21 | 3EB-01-27130 | RUBBER | 1 | SN: 330001-UP |
| 22 | 304-01-31150 | PLATE | 2 | SN: 330001-UP |
| 23 | 3EA-02-24230 | SHIM, 1.0MM | 5 | SN: 330001-UP |
| 24 | 01010-51685 | BOLT | 2 | SN: 330001-UP |
| 25 | 01643-31645 | WASHER | 2 | SN: 330001-UP |
| 26 | 34B-01-15150 | NAT | 2 | SN: 330001-UP |
| 27 | 37B-1CE-2060 | AIR CLEANER ASSEMBLY | 1 | SN: 330001-UP |
| 28 | 01010-50812 | BOLT | 2 | SN: 330001-UP |
| 29 | 01602-20825 | WASHER, SPRING | 2 | SN: 330001-UP |
| 30 | 3EA-02-25610 | HOSE | 1 | SN: 330001-UP |
| 31 | 07280-06429 | CLAMP | 1 | SN: 330001-UP |
| 32 | 07281-00609 | CLAMP | 1 | SN: 330001-UP |
| 33 | 3EA-02-26210 | HOSE | 1 | SN: 330001-UP |
| 34 | 07280-06429 | CLAMP | 1 | SN: 330001-UP |

Open this exact parts catalogue on K-Part

Open this exact parts catalogue on K-Part

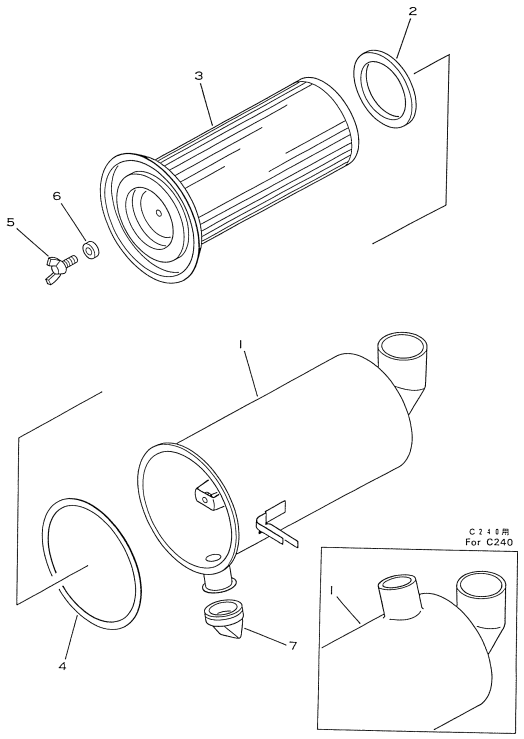


Reference: 1171

# 030020 AIR CLEANER

| Item | Part No. | Part Name | Qty | Options |
|---|---|---|---|---|
| | 37B-1CE-2060 | AIR CLEANER ASSEMBLY | 1 | SN: 330001-UP |
| 1 | 3EB-01-25710 | • BODY ASSEMBLY | 1 | SN: 330001-UP |
| 2 | 3EB-01-25840 | • PACKING | 1 | SN: 330001-UP |
| 3 | 3EB-01-25830 | • ELEMENT ASSEMBLY | 1 | SN: 330001-UP |
| 4 | 3EB-01-25860 | • PACKING | 1 | SN: 330001-UP |
| 5 | 3EB-01-25880 | • BOLT, WING | 1 | SN: 330001-UP |
| 6 | 3EB-01-25870 | • COLLAR | 1 | SN: 330001-UP |
| 7 | 3EB-01-25850 | • VALVE, VACUATOR | 1 | SN: 330001-UP |

Reference: 1171

Open this exact parts catalogue on K-Part

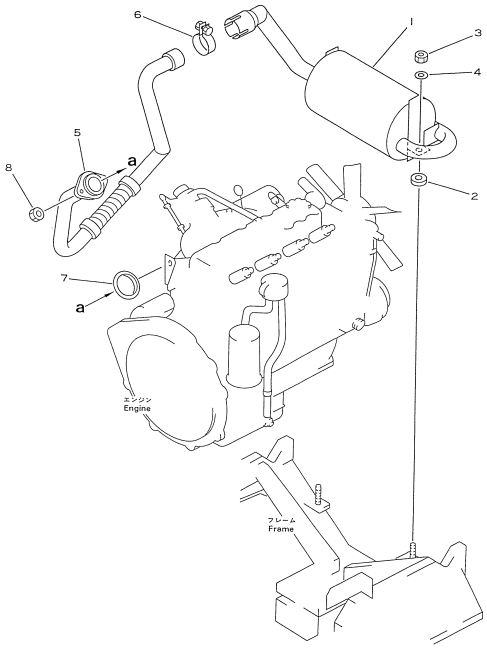


Reference: 1261

# 030030 EXHAUST SYSTEM

| Item | Part No. | Part Name | Qty | Options |
|---|---|---|---|---|
| 1 | 3EA-03-21111 | MUFFLER | 1 | SN: 330001-UP |
| 2 | 3EA-03-11120 | RUBBER | 2 | SN: 330001-UP |
| 3 | 01598-10809 | NAT | 2 | SN: 330001-UP |
| 4 | 34A-50-22140 | WASHER | 2 | SN: 330001-UP |
| 5 | 3EA-03-21810 | PIPE | 1 | SN: 330001-UP |
| 6 | 3EB-03-22151 | CLAMP SUB ASSEMBLY | 1 | SN: 330001-UP |
| | 01010-50830 | • BOLT | 1 | SN: 330001-UP |
| | 01602-20825 | • WASHER, SPRING | 1 | SN: 330001-UP |
| 7 | 9-22116-021-0 | SPACER | 1 | SN: 330001-UP |
| 8 | 9-09840-085-0 | NAT | 2 | SN: 330001-UP |

Reference: 1261

Open this exact parts catalogue on K-Part

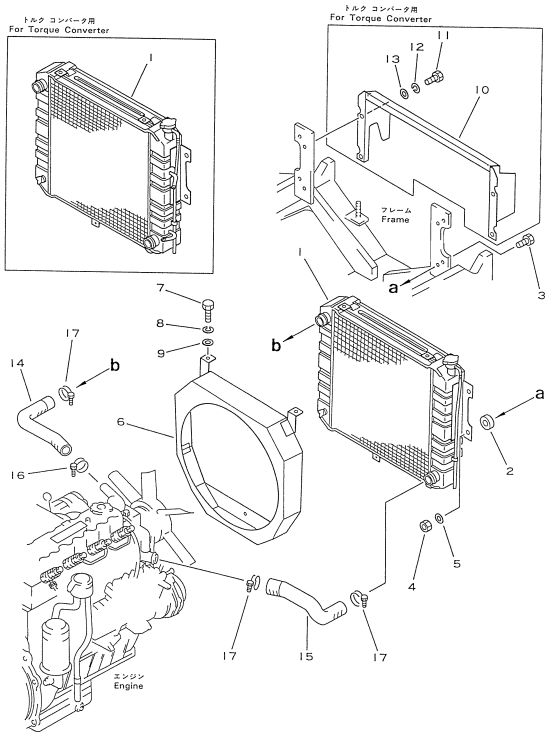


Reference: 1361

# 030040 RADIATOR

| Item | Part No. | Part Name | Qty | Options |
|---|---|---|---|---|
| 1 | 3EA-04-26410 | RADIATOR ASSEMBLY, (FOR CLUTCH) | 1 | SN: 330001-UP |
| | 37A-1CG-2030 | RADIATOR ASSEMBLY, (FOR TORQUE CONVERTER) | 1 | SN: 330001-UP |
| | 3EB-04-21130 | • CAP | 1 | SN: 330001-UP |
| | 34B-04-11240 | • VALVE, DRAIN | 1 | SN: 330001-UP |
| | 34B-04-11250 | • PACKING | 1 | SN: 330001-UP |
| 2 | 34B-04-15220 | RUBBER | 4 | SN: 330001-UP |
| 3 | 01010-50835 | BOLT | 4 | SN: 330001-UP |
| 4 | 01598-10809 | NAT | 4 | SN: 330001-UP |
| 5 | 01642-20810 | WASHER | 4 | SN: 330001-UP |
| 6 | 3EA-04-27411 | SHROUD | 1 | SN: 330001-UP |
| 7 | 01010-50812 | BOLT | 3 | SN: 330001-UP |
| 8 | 01602-20825 | WASHER, SPRING | 3 | SN: 330001-UP |
| 9 | 01642-20810 | WASHER | 3 | SN: 330001-UP |
| 10 | 3EA-04-25210 | COVER, (FOR TORQUE CONVERTER) | 1 | SN: 330001-UP |
| 11 | 01010-50812 | BOLT, (FOR TORQUE CONVERTER) | 4 | SN: 330001-UP |
| 12 | 01602-20825 | WASHER, SPRING (FOR TORQUE CONVERTER) | 4 | SN: 330001-UP |
| 13 | 01642-20810 | WASHER, (FOR TORQUE CONVERTER) | 4 | SN: 330001-UP |
| 14 | 3EA-04-27430 | HOSE | 1 | SN: 330001-UP |
| 15 | 3EA-04-27420 | HOSE | 1 | SN: 330001-UP |
| 16 | 07280-03826 | CLAMP | 1 | SN: 330001-UP |
| 17 | 07280-04126 | CLAMP | 3 | SN: 330001-UP |

Reference: 1361

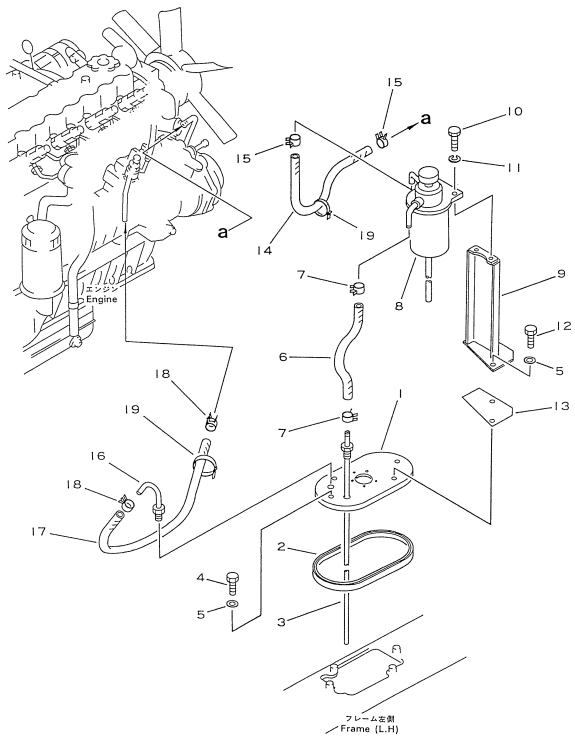


Reference: 1461

# 030050 FUEL SYSTEM

| Item | Part No. | Part Name | Qty | Options |
|---|---|---|---|---|
| 1 | 37B-1CT-2020 | COVER | 1 | SN: 330001-UP |
| 2 | 3EB-05-21130 | PACKING | 1 | SN: 330001-UP |
| 3 | 3EA-05-21340 | PIPE | 1 | SN: 330001-UP |
| 4 | 01010-50816 | BOLT | 4 | SN: 330001-UP |
| 5 | 07005-00812 | GASKET | 4 | SN: 330001-UP |
| 6 | 37B-1FA-1260 | HOSE | 1 | SN: 330001-UP |
| 7 | 07285-00130 | CLIP | 2 | SN: 330001-UP |
| 8 | 8-94412-705-2 | FILTER ASSEMBLY | 1 | SN: 330001-UP |
| 9 | 3EA-05-21510 | PIPE | 1 | SN: 330001-UP |
| 10 | 01010-50625 | BOLT | 2 | SN: 330001-UP |
| 11 | 01602-20619 | WASHER, SPRING | 2 | SN: 330001-UP |
| 12 | 01010-50820 | BOLT | 2 | SN: 330001-UP |
| 13 | 3EB-05-21470 | RUBBER | 1 | SN: 330001-UP |
| 14 | 37B-1FA-1290 | HOSE | 1 | SN: 330001-UP |
| 15 | 07285-00130 | CLIP | 2 | SN: 330001-UP |
| 16 | 3EB-05-21430 | PIPE | 1 | SN: 330001-UP |
| 17 | 37B-1FA-1020 | HOSE, 370MM | 1 | SN: 330001-UP |
| 18 | 07285-00125 | CLIP | 2 | SN: 330001-UP |
| 19 | 37B-1AE-6010 | BAND | 1 | SN: 330001-UP |

Reference: 1461

Open this exact parts catalogue on K-Part

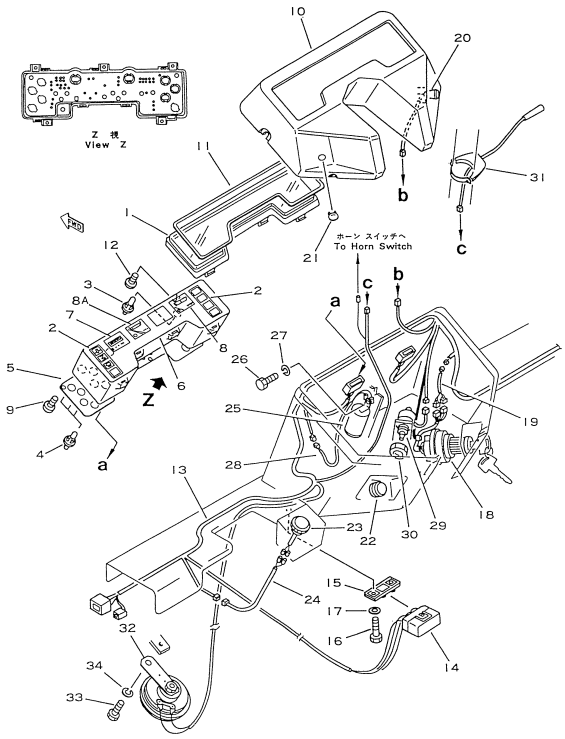


Reference: 1601D

# 030060 ELECTRICAL SYSTEM (1/3)

| Item | Part No. | Part Name | Qty | Options |
|---|---|---|---|---|
| | 37B-1CP-2402 | PANEL ASSEMBLY, METER | 1 | SN: 330001-UP |
| | 37B-1CP-2411 | • PANEL ASSEMBLY | 1 | SN: 330001-UP |
| 1 | 3EB-50-23520 | • • PLATE | 1 | SN: 330001-UP |
| 2 | 3EB-50-23530 | • • LENS KIT | 1 | SN: 330001-UP |
| 3 | 3EB-50-23560 | • • BATTERY, 3.4W, HOUR METER AND FUEL GAUGE | 2 | SN: 330001-UP |
| 4 | 3EB-50-23580 | • • BULB, 3.4W, SAFETY CHECKER | 3 | SN: 330001-UP |
| 5 | 3EB-50-23551 | • • PLATE ASSEMBLY | 1 | SN: 330001-UP |
| 6 | 3EB-50-23940 | • • PLATE | 1 | SN: 330001-UP |
| 7 | 3EB-50-23620 | • • METER, HOUR | 1 | SN: 330001-UP |
| 8 | 3EB-50-23651 | • • GAUGE, FUEL | 1 | SN: 330001-UP |
| 8A | 3EB-50-23631 | • • GAUGE, WATER | 1 | SN: 330001-UP |
| 9 | 3EB-50-23590 | • • SCREW | 3 | SN: 330001-UP |
| 10 | 3EB-50-23510 | • PANEL | 1 | SN: 330001-UP |
| 11 | 3EB-50-23540 | • PACKING | 1 | SN: 330001-UP |
| 12 | 3EB-50-23570 | • SCREW | 5 | SN: 330001-UP |
| 13 | 3EA-55-21114 | WIRING HARNESS | 1 | SN: 330001-UP |
| 14 | 3EB-55-21211 | • BOX ASSEMBLY, FUSE | 1 | SN: 330001-UP |
| | 37B-1EJ-2010 | • • FUSE, 10A | 5 | SN: 330001-UP |
| | 37B-1EJ-2020 | • • FUSE, 15A | 1 | SN: 330001-UP |
| 15 | 3EB-55-21250 | BRACKET | 1 | SN: 330001-UP |
| 16 | 01220-40612 | SCREW | 2 | SN: 330001-UP |
| 17 | 01642-20608 | WASHER | 2 | SN: 330001-UP |
| 18 | 3EB-55-21162 | SWITCH, STARTER | 1 | SN: .-UP |
| | 3EB-55-21161 | □ SWITCH, STARTER | 1 | SN: 330001-. |
| | 3EB-55-11580 | • KEY | 2 | SN: 330001-UP |
| 19 | 3EB-55-22690 | CABLE | 1 | SN: 330001-UP |
| 20 | 34C-55-12411 | SWITCH, LAMP | 1 | SN: 330001-UP |
| 21 | 3EB-50-21150 | CLIP | 1 | SN: 330001-UP |
| 22 | 34A-55-24471 | COVER | 1 | SN: 330001-UP |
| 23 | 9-82530-041-0 | SIGNAL, HEATER | 1 | SN: 330001-UP |
| 24 | 3EA-55-11180 | CABLE | 1 | SN: 330001-UP |
| 25 | 3EB-55-23320 | FLASHER | 1 | SN: 330001-UP |
| 26 | 01010-50610 | BOLT | 1 | SN: 330001-UP |

Open this exact parts catalogue on K-Part

| Item | Part No. | Part Name | Qty | Options |
|---|---|---|---|---|
| 27 | 01602-20619 | WASHER, SPRING | 1 | SN: 330001-UP |
| 28 | 3EB-55-21120 | WOW | 1 | SN: 330001-UP |
| 29 | 3EB-55-23210 | SWITCH, BACKUP LAMP (FOR TORQUE CONVERTER) | 1 | SN: 330001-UP |
| 30 | 3EB-35-22760 | NUT, (FOR TORQUE CONVERTER) | 1 | SN: 330001-UP |
| 31 | 3EB-55-11270 | SWITCH, TURN SIGNAL | 1 | SN: 330001-UP |
| 32 | 3EB-55-23510 | HORN | 1 | SN: 330001-UP |
| 33 | 01010-50816 | BOLT | 1 | SN: 330001-UP |
| 34 | 01602-20825 | WASHER, SPRING | 1 | SN: 330001-UP |

**Catalog signs:** ☐ part above may be used instead

Reference: 1601D

Open this exact parts catalogue on K-Part

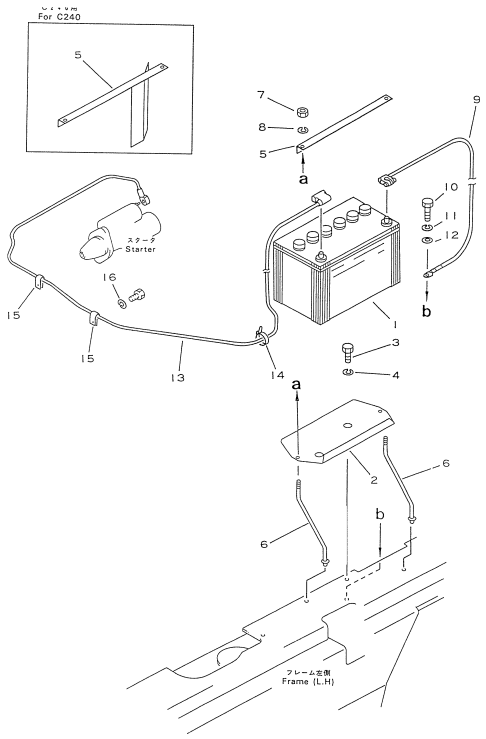


Reference: 1602A

# 030070 ELECTRICAL SYSTEM (2/3)

| Item | Part No. | Part Name | Qty | Options |
|---|---|---|---|---|
| 1 | 3EB-55-13220 | BATTERY | 1 | SN: 330001-UP |
| 2 | 3EB-55-24421 | HOLDA | 1 | SN: 330001-UP |
| 3 | 01010-50814 | BOLT | 2 | SN: 330001-UP |
| 4 | 01602-20825 | WASHER, SPRING | 2 | SN: 330001-UP |
| 5 | 3EA-55-24420 | ANGLE | 1 | SN: 330001-UP |
| 6 | 34B-55-35120 | CLAMP | 2 | SN: 330001-UP |
| 7 | 01580-10605 | NAT | 2 | SN: 330001-UP |
| 8 | 01641-20608 | WASHER | 2 | SN: 330001-UP |
| 9 | 3EB-55-24560 | CABLE (-) | 1 | SN: 330001-UP |
| 10 | 01010-50812 | BOLT | 1 | SN: 330001-UP |
| 11 | 01602-20825 | WASHER, SPRING | 1 | SN: 330001-UP |
| 12 | 01641-20812 | WASHER | 1 | SN: 330001-UP |
| 13 | 3EA-55-24410 | CABLE (+) | 1 | SN: 330001-UP |
| 14 | 37B-1AE-6010 | BAND | 7 | SN: 330001-UP |
| 15 | 08036-01414 | CLIP | 2 | SN: 330001-UP |
| 16 | 01602-21030 | WASHER, SPRING | 2 | SN: 330001-UP |

Reference: 1602A

Open this exact parts catalogue on K-Part

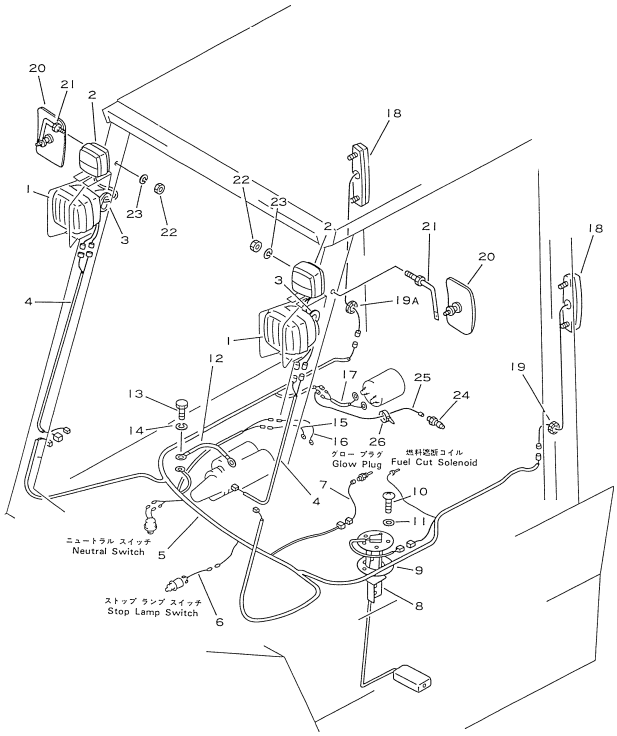


Reference: 1603B

# 030080 ELECTRICAL SYSTEM (3/3)

| Item | Part No. | Part Name | Qty | Options |
|---|---|---|---|---|
| 1 | 37B-1AE-1010 | LAMP ASSEMBLY, HEAD | 2 | SN: 330001-UP |
| | 3EB-55-11220 | • LENS | 1 | SN: 330001-UP |
| | 08103-01235 | • LAMP, 35W | 1 | SN: 330001-UP |
| 2 | 37B-1EH-2010 | COMBINATION LAMP ASSEMBLY, TURN SIGNAL | 2 | SN: 330001-UP |
| | 08105-01220 | • ELECTRIC HEATER, 23W | 1 | SN: 330001-UP |
| | 3EB-55-11290 | • BULB, 8W | 1 | SN: 330001-UP |
| | 3EB-55-11240 | • LENS, FRONT | 1 | SN: 330001-UP |
| | 3EB-55-11250 | • LENS, REAR | 1 | SN: 330001-UP |
| 3 | 3EB-55-23370 | COVER | 2 | SN: 330001-UP |
| 4 | 3EB-55-23421 | WOW | 2 | SN: 330001-UP |
| 5 | 3EA-55-22312 | WIRING HARNESS | 1 | SN: 330001-UP |
| 6 | 3EA-55-14710 | WIRE, (FOR TORQUE CONVERTER) | 1 | SN: 330001-UP |
| 7 | 3EB-55-22660 | WOW | 1 | SN: 330001-UP |
| 8 | 3EA-55-23510 | SENSOR ASSEMBLY | 1 | SN: 330001-UP |
| 9 | 324-06-11330 | PACKING | 1 | SN: 330001-UP |
| 10 | 01220-40512 | SCREW | 5 | SN: 330001-UP |
| 11 | 3SB-55-11380 | GASKET | 5 | SN: 330001-UP |
| 12 | 3EB-55-24580 | CABLE, EARTH | 1 | SN: 330001-UP |
| 13 | 01010-50812 | BOLT | 1 | SN: 330001-UP |
| 14 | 01602-20825 | WASHER, SPRING | 1 | SN: 330001-UP |
| 15 | 3EB-55-22240 | WOW | 1 | SN: 330001-UP |
| 16 | 3EB-55-22690 | CABLE | 1 | SN: 330001-UP |
| 17 | 3EB-55-22120 | WOW | 1 | SN: 330001-UP |
| 18 | 37A-1AE-1010 | COMBINATION LAMP ASSEMBLY, REAR | 2 | SN: 330001-UP |
| | 3EB-55-12322 | • LENS | 1 | SN: 330001-UP |
| | 08104-01220 | • ELECTRIC HEATER, 23/8W | 1 | SN: 330001-UP |
| | 08105-01220 | • ELECTRIC HEATER, 23W | 1 | SN: 330001-UP |
| | 08110-01210 | • BATTERY, 10W | 1 | SN: 330001-UP |
| 19 | 3EB-55-23350 | GROMMET | 1 | SN: 330001-UP |
| 19A | 3EB-55-23340 | GROMMET | 1 | SN: 330001-UP |
| 20 | 3EB-55-13571 | MIRROR | 2 | SN: 330001-UP |
| 21 | 3EB-55-14310 | ROD | 2 | SN: 330001-UP |
| 22 | 01580-11008 | NAT | 2 | SN: 330001-UP |
| 23 | 01602-21030 | WASHER, SPRING | 2 | SN: 330001-UP |

Open this exact parts catalogue on K-Part

# Get the complete PDF catalogue

Komatsu FD10H-15 (JPN) Diesel Engine Forklift S/N 330001-359999 (Japanese)

**$89**

with PayPal | Store cart: $99

**Buy this PDF on Manuals Komatsu**

Check the model, serial range and language before payment.

Download instructions are emailed after payment confirmation.

This free sample contains 10 catalogue pages.