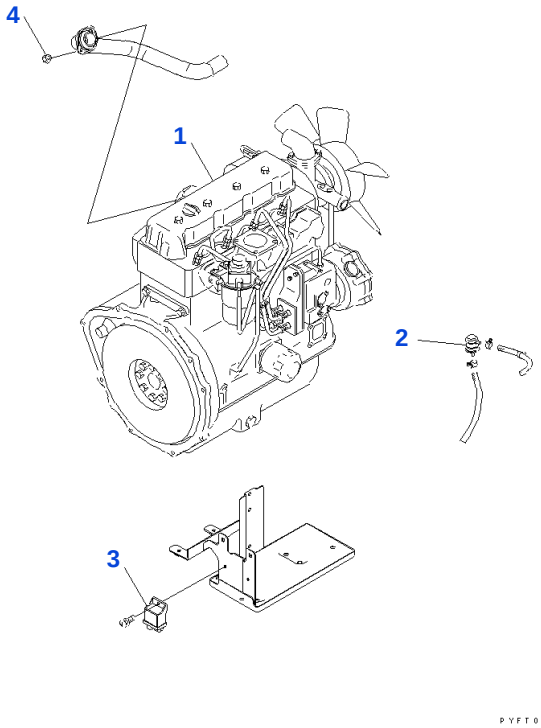

Reference: A4110-01A0

030010 ENGINE UNIT (CLUTCH SPEC)(#200001-)

Item	Part No.	Part Name	Qty	Options
1	37B-1DE-5285	ENGINE, 4D92E	1	SN: 200001-UP
2	YM129052-55630	• FILTER	1	SN: 200001-UP
3	YM129930-77950	• CONTROLLER	1	SN: 200001-UP
4	YM26366-080002	• NAT	2	SN: 200001-UP

Reference: A4110-01A0

Open this exact parts catalogue on K-Part

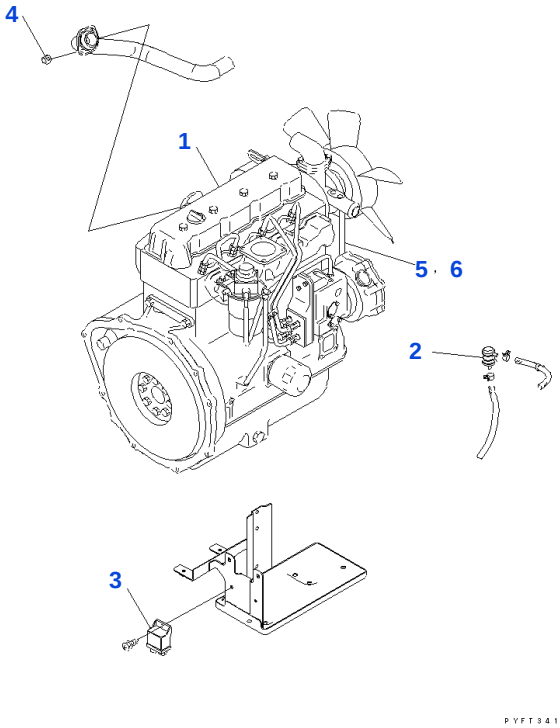

Reference: A4110-01A5

030020 ENGINE UNIT (FOR SPARE RADIATOR) (#200001-)

Item	Part No.	Part Name	Qty	Options
	37B-1DE-5685	ENGINE, 4D92E, H.S. FAN	1	SN: 200001-UP
1	37B-1DE-5285	• ENGINE, 4D92E STD	1	SN: 200001-UP
2	YM129052-55630	• • FILTER	1	SN: 200001-UP
3	YM129930-77950	• • CONTROLLER	1	SN: 200001-UP
4	YM26366-080002	• • NAT	2	SN: 200001-UP
5	YM129904-42290	• V BELT	1	SN: 200001-UP
6	YM129900-42461	• PULLEY	1	SN: 200001-UP

Reference: A4110-01A5

Open this exact parts catalogue on K-Part

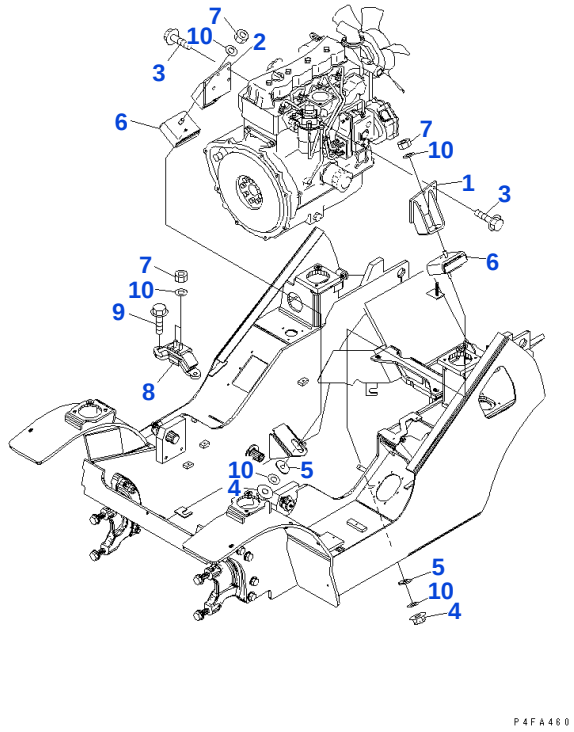

Reference: A4120-01A0

030030 ENGINE MOUNTING PARTS (FOR DIESEL ENGINE)(#200001-)

Item	Part No.	Part Name	Qty	Options
1	3EB-02-52112SG	BRACKET, LEFT	1	SN: 200001-UP
2	3EB-02-52122SG	BRACKET, RIGHT	1	SN: 200001-UP
3	01010-81025	BOLT	8	SN: 200001-UP
	01643-31032	WASHER	8	SN: 200001-UP
4	01596-01211	NAT	2	SN: 200001-UP
5	3EB-01-51190	WASHER	2	SN: 200001-UP
6	3EB-01-61130	CUSHION	2	SN: 200001-UP
7	01580-11210	NAT	4	SN: 200001-UP
8	3EB-02-52130	MOUNT	1	SN: 200001-UP
9	3EA-71-12790	BOLT	2	SN: 200001-UP
10	01643-31232	WASHER	6	SN: 200001-UP

Reference: A4120-01A0

Open this exact parts catalogue on K-Part

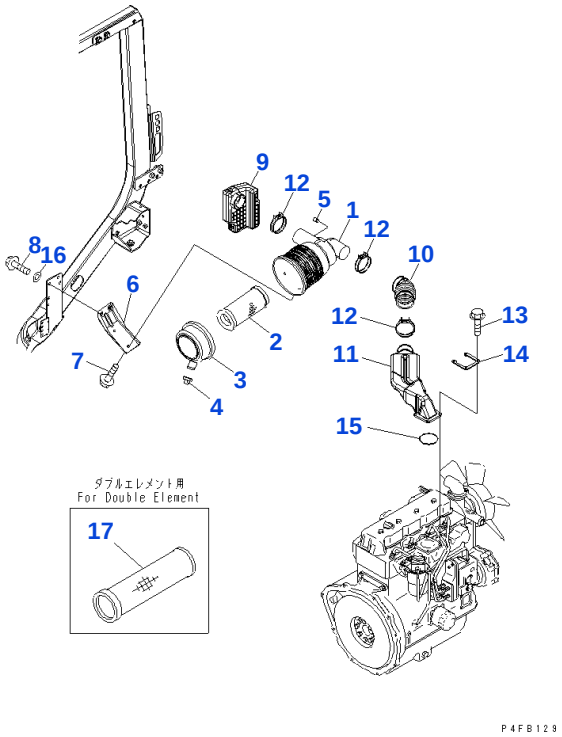

Reference: A4140-01A0

030040 AIR INTAKE CONNECTION(#200001-)

Item	Part No.	Part Name	Qty	Options
	3EB-02-44710	AIR CLEANER ASSEMBLY	1	SN: 200001-UP
1		• ☆ BODY ASSEMBLY	1	SN: 200001-UP
2	3EB-02-63210	• ELEMENT ASSEMBLY, OUTER	1	SN: 203211-UP
	3EB-02-34750	• ◆ ELEMENT ASSEMBLY, OUTER	1	SN: 200001-203210
3	3EB-02-34761	• COVER ASSEMBLY	1	SN: 200001-UP
4	3EB-02-44770	• VALVE, VACUUM	1	SN: 200001-UP
5	3EB-02-34780	• CAP	1	SN: 200001-UP
6	3EB-02-41730	BRACKET	1	SN: 200001-UP
7	01010-80820	BOLT	2	SN: 200001-UP
	01643-30823	WASHER	2	SN: 200001-UP
8	01010-80820	BOLT	2	SN: 200001-UP
	01643-30823	WASHER	2	SN: 200001-UP
9	3EB-02-52211	SILENCER,(FOR FD20/25/30)	1	SN: 200001-UP
	3EB-02-52311	SILENCER, (FOR FD20H/25H/30H/35A)	1	SN: 200001-UP
	3EB-02-52311	SILENCER, (FOR EC)	1	SN: 200001-UP
10	3EB-02-52220	HOSE	1	SN: 200001-UP
11	3EB-02-52230	CONNECTOR	1	SN: 200001-UP
12	07280-07429	CLAMP	3	SN: 200001-UP
13	01010-80825	BOLT	4	SN: 200001-UP
	01643-30823	WASHER	4	SN: 200001-UP
14	3EB-02-34630	PLATE	1	SN: 200001-UP
15	07000-72075	O RING	1	SN: 200001-UP
16	34A-42-41130	WASHER	2	SN: 200001-UP
17	3EB-02-34790	ELEMENT ASSEMBLY, (FOR DOUBLE ELEMENT)	1	SN: 200001-UP

Catalog signs: ☆ not supplied separately: assembly only ◆ interchangeable with part above

Reference: A4140-01A0

Open this exact parts catalogue on K-Part

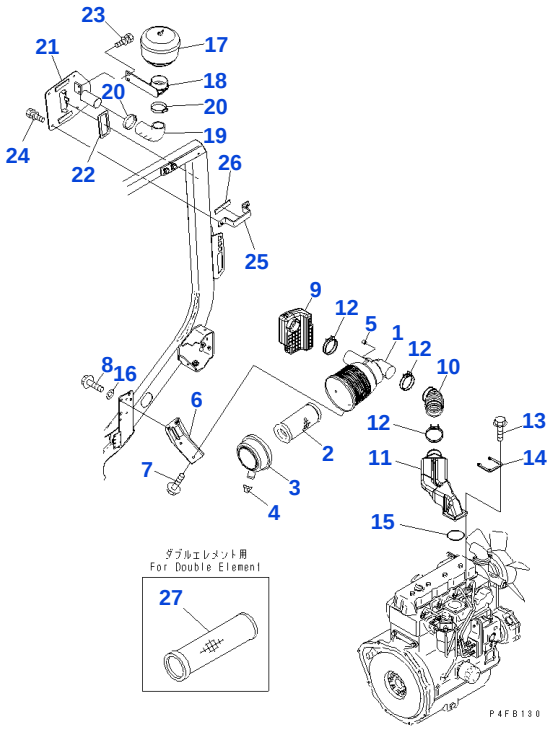

Reference: A4140-01A3

030050 AIR INTAKE CONNECTION (WITH PRE CLEANER)(#200001-)

Item	Part No.	Part Name	Qty	Options
	3EB-02-44710	AIR CLEANER ASSEMBLY	1	SN: 200001-UP
1		• ☆ BODY ASSEMBLY	1	SN: 200001-UP
2	3EB-02-63210	• ELEMENT ASSEMBLY	1	SN: 203211-UP
	3EB-02-34750	• ◆ ELEMENT ASSEMBLY	1	SN: 200001-203210
3	3EB-02-34761	• COVER ASSEMBLY	1	SN: 200001-UP
4	3EB-02-44770	• VALVE, VACUUM	1	SN: 200001-UP
5	3EB-02-34780	• CAP	1	SN: 200001-UP
6	3EB-02-41730	BRACKET	1	SN: 200001-UP
7	01010-80820	BOLT	2	SN: 200001-UP
	01643-30823	WASHER	2	SN: 200001-UP
8	01010-80820	BOLT	2	SN: 200001-UP
	01643-30823	WASHER	2	SN: 200001-UP
9	3EB-02-52211	SILENCER	1	SN: 200001-UP
10	3EB-02-52220	HOSE	1	SN: 200001-UP
11	3EB-02-52230	CONNECTOR	1	SN: 200001-UP
12	07280-07429	CLAMP	3	SN: 200001-UP
13	01010-80825	BOLT	4	SN: 200001-UP
	01643-30823	WASHER	4	SN: 200001-UP
14	3EB-02-34630	PLATE	1	SN: 200001-UP
15	07000-72075	O RING	1	SN: 200001-UP
16	34A-42-41130	WASHER	2	SN: 200001-UP
17	3EC-01-33310	PULLEY CLEANER	1	SN: 200001-UP
18	3EB-01-47710	BRACKET	1	SN: 200001-UP
19	3EB-02-14830	HOSE	1	SN: 200001-UP
20	07281-00709	CLAMP	2	SN: 200001-UP
21	3EB-01-68860	BRACKET	1	SN: 200001-UP
22	3EB-01-68880	GASKET	1	SN: 200001-UP
23	01010-D0816	BOLT	2	SN: 200001-UP
	01643-70823	WASHER	2	SN: 200001-UP
24	01010-D0820	BOLT	4	SN: 200001-UP
	01643-70823	WASHER	4	SN: 200001-UP
25	3EB-01-68870	CLAMP	2	SN: 200001-UP
26	3EB-01-68890	RUBBER	2	SN: 200001-UP
27	3EB-02-34790	ELEMENT ASSEMBLY, (FOR DOUBLE ELEMENT)	1	SN: 200001-UP

Open this exact parts catalogue on K-Part

Catalog signs: ☆ not supplied separately: assembly only ◆ interchangeable with part above

Reference: A4140-01A3

Open this exact parts catalogue on K-Part

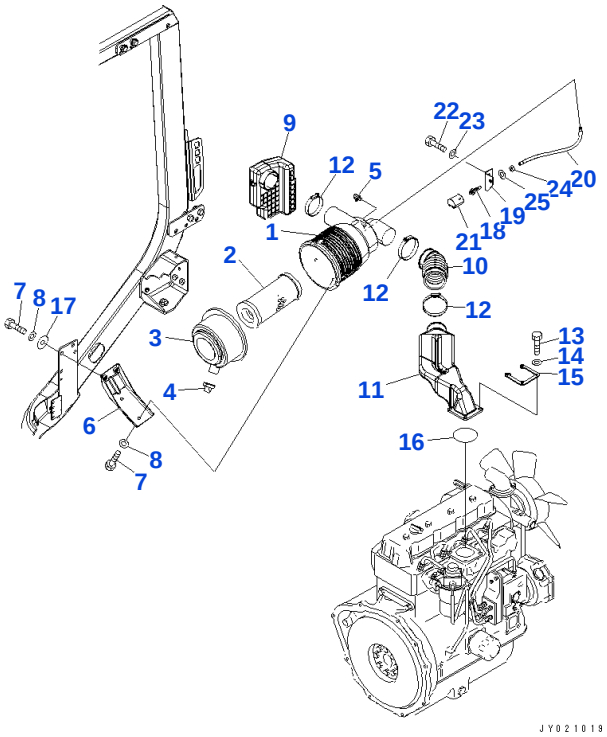

Reference: A4140-01A6

030060 AIR INTAKE CONNECTION (FOR SAFETY CHECKER)(#200001-)

Item	Part No.	Part Name	Qty	Options
	3EB-02-45710	AIR CLEANER ASSEMBLY	1	SN: 200001-UP
1		• ☆ BODY ASSEMBLY	1	SN: 200001-UP
2	3EB-02-63210	• ELEMENT ASSEMBLY	1	SN: 203211-UP
	3EB-02-34750	• ☐ ELEMENT ASSEMBLY	1	SN: 200001-203210
3	3EB-02-34761	• COVER ASSEMBLY	1	SN: 200001-UP
4	3EB-02-44770	• VALVE	1	SN: 200001-UP
5	3EB-02-46330	• ERBO	1	SN: 200001-UP
6	3EB-02-41730SG	BRACKET	1	SN: 200001-UP
7	01010-80820	BOLT	4	SN: 200001-UP
8	01643-30823	WASHER	4	SN: 200001-UP
9	3EB-02-52211	SILENCER	1	SN: 200001-UP
10	3EB-02-52220	HOSE	1	SN: 200001-UP
11	3EB-02-52230	CONNECTOR	1	SN: 200001-UP
12	07280-07429	CLAMP	3	SN: 200001-UP
13	01010-80825	BOLT	4	SN: 200001-UP
14	01602-20825	WASHER, SPRING	4	SN: 200001-UP
15	3EB-02-34630	PLATE	1	SN: 200001-UP
16	07000-72075	O RING	1	SN: 200001-UP
17	34A-42-41130	WASHER	2	SN: 200001-UP
18	3EB-02-46310	NIPPLE	1	SN: 200001-UP
19	3EB-02-46320SG	BRACKET	1	SN: 200001-UP
20	07823-00603	TUBE	1	SN: 200001-UP
21	3EB-01-32721	INJECTOR	1	SN: 200001-UP
22	01010-80620	BOLT	2	SN: 200001-UP
23	01643-30623	WASHER	2	SN: 200001-UP
24	01582-11008	NAT	1	SN: 200001-UP
25	01643-30823	WASHER	1	SN: 200001-UP

Catalog signs: ☆ not supplied separately: assembly only ☐ part above may be used instead

Reference: A4140-01A6

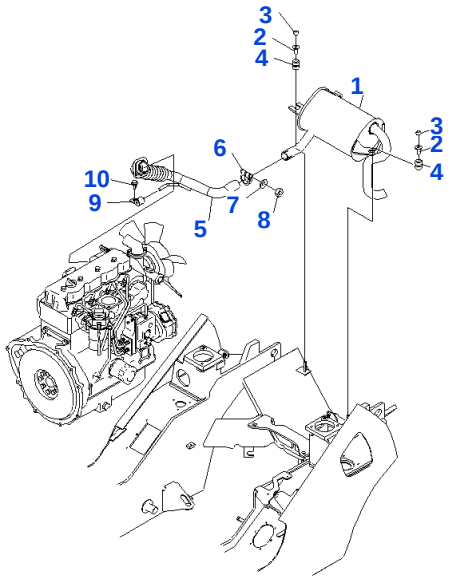

PYFU435

Reference: B4110-01A0

060010 MUFFLER AND EXHAUST CONNECTION(#200001-)

Item	Part No.	Part Name	Qty	Options
1	3EB-03-61611	MUFFLER, DIESEL	1	SN: 200001-UP
2	3EB-03-51131	COLLAR	2	SN: 200001-UP
3	01596-01009	NAT	2	SN: 200001-UP
4	3EB-03-41120	RUBBER	2	SN: 200001-UP
5	3EB-03-52120	PIPE	1	SN: 200001-UP
6	3EB-03-31530	CLAMP	1	SN: 200001-UP
7	01643-31032	WASHER	1	SN: 200001-UP
8	01582-11008	NAT	1	SN: 200001-UP
9	3EB-03-51170	BRACKET	1	SN: 200001-UP
10	01010-80820	BOLT	1	SN: 200001-UP
	01643-30823	WASHER	1	SN: 200001-UP

Reference: B4110-01A0

Open this exact parts catalogue on K-Part

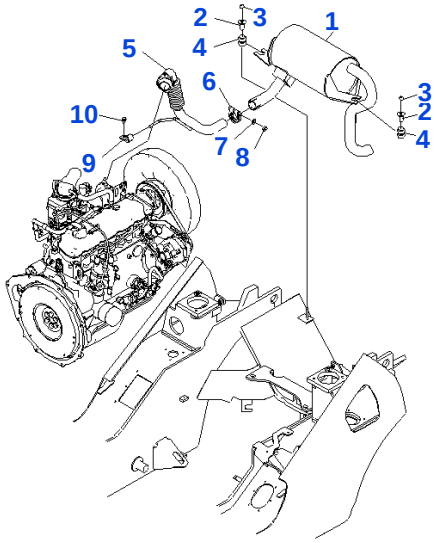

PYFV490

Reference: B4110-01A3

060020 MUFFLER AND EXHAUST CONNECTION (SPECIAL EQUIPMENT) (#200001-)

Item	Part No.	Part Name	Qty	Options
1	3EB-03-62710	MUFFLER	1	SN: 200001-UP
		• ☆ WORK EQUIPMENT	1	SN: 200001-UP
2	3EB-03-51131	COLLAR	2	SN: 200001-UP
3	01596-01009	NAT	2	SN: 200001-UP
4	3EB-03-41120	RUBBER	2	SN: 200001-UP
5	3EB-03-52120	PIPE	1	SN: 200001-UP
6	3EB-03-31530	CLAMP	1	SN: 200001-UP
7	01643-31032	WASHER	1	SN: 200001-UP
8	01582-11008	NAT	1	SN: 200001-UP
9	3EB-03-51170	BRACKET	1	SN: 200001-UP
10	01010-80820	BOLT	1	SN: 200001-UP
	01643-30823	WASHER	1	SN: 200001-UP

Catalog signs: ☆ not supplied separately: assembly only

Reference: B4110-01A3

Open this exact parts catalogue on K-Part

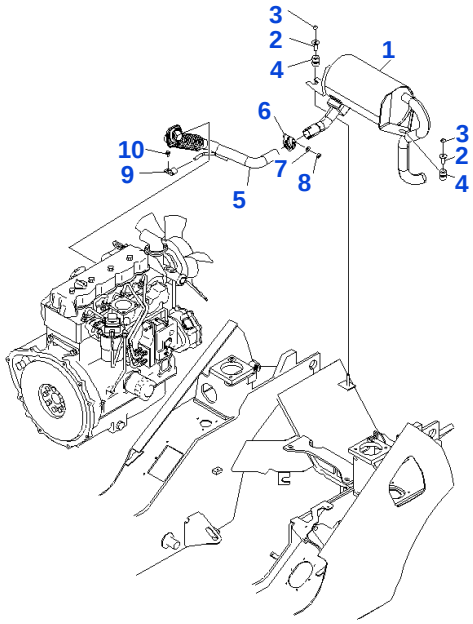

PYFV494

Reference: B4110-01A5

060030 MUFFLER AND EXHAUST CONNECTION (FLAME TRAP)(#200001-)

Item	Part No.	Part Name	Qty	Options
1	3EB-03-64760	MUFFLER	1	SN: 200001-UP
2	3EB-03-51131	COLLAR	2	SN: 200001-UP
3	01596-01009	NAT	2	SN: 200001-UP
4	3EB-03-41120	RUBBER	2	SN: 200001-UP
5	3EB-03-52120	PIPE	1	SN: 200001-UP
6	3EB-03-31530	CLAMP	1	SN: 200001-UP
7	01643-31032	WASHER	1	SN: 200001-UP
8	01582-11008	NAT	1	SN: 200001-UP
9	3EB-03-51170	BRACKET	1	SN: 200001-UP
10	01010-80820	BOLT	1	SN: 200001-UP
	01643-30823	WASHER	1	SN: 200001-UP

Reference: B4110-01A5

Open this exact parts catalogue on K-Part

Get the complete PDF catalogue

Komatsu FD10-21 (JPN) Diesel Engine Forklift S/N 200001-208653 (Japanese)

$89

with PayPal | Store cart: $99

Buy this PDF on Manuals Komatsu

Check the model, serial range and language before payment.

Download instructions are emailed after payment confirmation.

This free sample contains 10 catalogue pages.