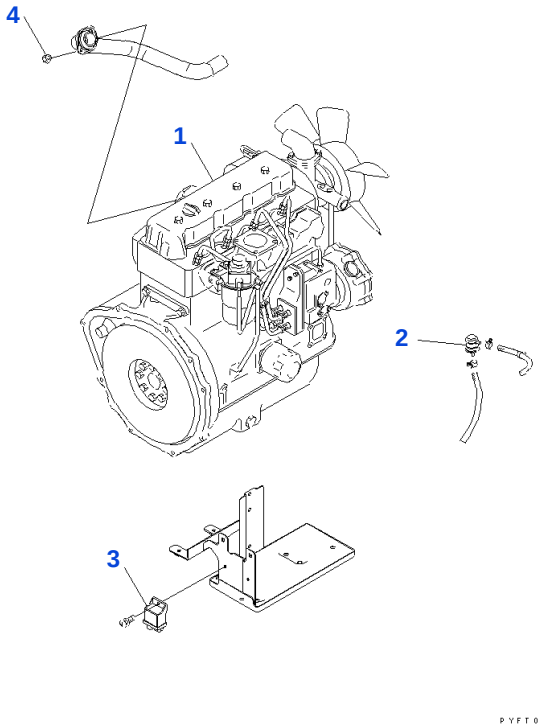

Reference: A4110-01A0

030010 ENGINE UNIT (DRY CLUTCH AND TORQUE CONVERTER SPEC) (#650001-668499)

Item	Part No.	Part Name	Qty	Options
1	37B-1DE-5110	ENGINE, 4D92E	1	SN: 650001-668499
2	YM129052-55630	• FILTER	1	SN: 650001-668499
3	YM129930-77950	• CONTROLLER	1	SN: 650001-668499
4	YM26366-080002	• NAT	2	SN: 650001-668499

Reference: A4110-01A0

Open this exact parts catalogue on K-Part

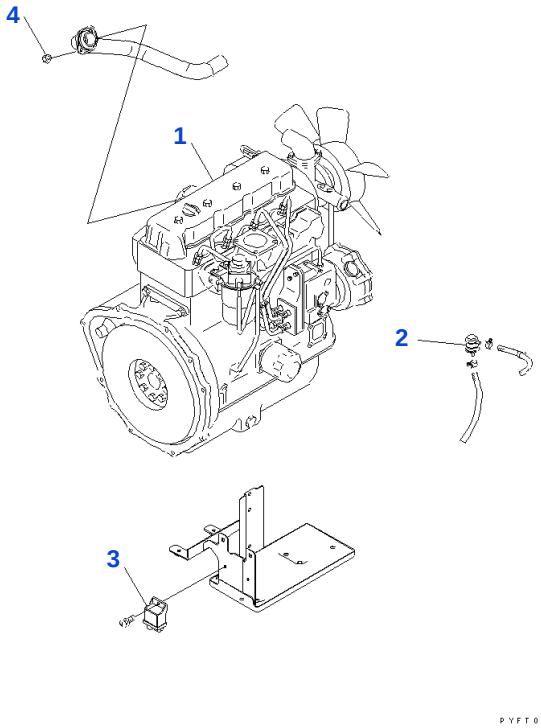

Reference: A4110-01A0A

030020 ENGINE UNIT (DRY CLUTCH AND TORQUE CONVERTER TYPE) (#668500-)

Item	Part No.	Part Name	Qty	Options
1	37B-1DE-5282	ENGINE, 4D92E	1	SN: 668500-UP
2	YM129052-55630	• FILTER	1	SN: 668500-UP
3	YM129930-77950	• CONTROLLER	1	SN: 668500-UP
4	YM26366-080002	• NAT	2	SN: 668500-UP

Reference: A4110-01A0A

Open this exact parts catalogue on K-Part

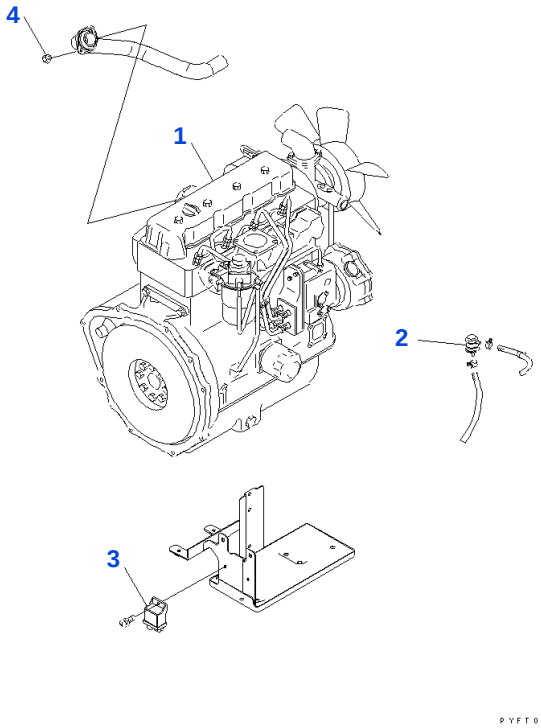

Reference: A4110-01A1

030030 ENGINE UNIT (WET CLUTCH TYPE)(#650001-668499)

Item	Part No.	Part Name	Qty	Options
1	37B-1DE-5210	ENGINE, 4D92E	1	SN: 650001-668499
2	YM129052-55630	• FILTER	1	SN: 650001-668499
3	YM129930-77950	• CONTROLLER	1	SN: 650001-668499
4	YM26366-080002	• NAT	2	SN: 650001-668499

Reference: A4110-01A1

Open this exact parts catalogue on K-Part

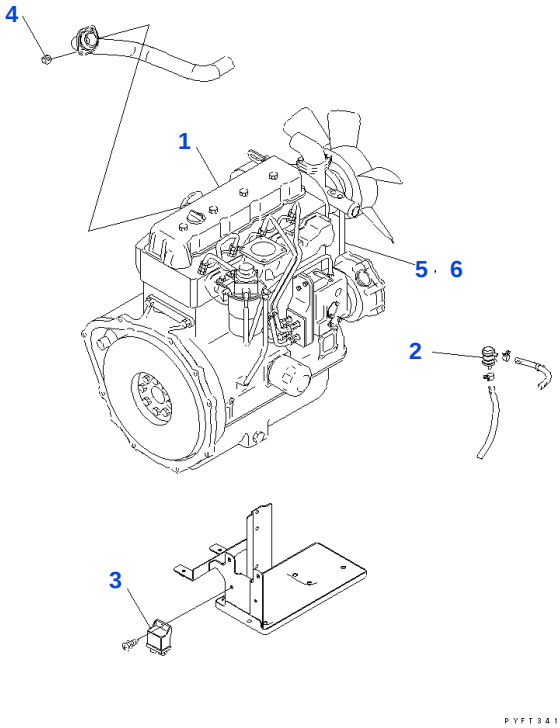

Reference: A4110-11P0

030040 ENGINE UNIT (FOR DRY CLUTCH AND TORQUE CONVERTER) (HIGH SPEED FAN?

Item	Part No.	Part Name	Qty	Options
	37B-1DE-5150	ENGINE, 4D92E	1	SN: 650001-668499
1	37B-1DE-5110	• ENGINE, 4D92E	1	SN: 650001-668499
2	YM129052-55630	• • FILTER	1	SN: 650001-668499
3	YM129930-77950	• • CONTROLLER	1	SN: 650001-668499
4	YM26366-080002	• • NAT	2	SN: 650001-668499
5	129904-42290	• V BELT	1	SN: 650001-668499
6	129900-42461	• PULLEY	1	SN: 650001-668499

Reference: A4110-11P0

Open this exact parts catalogue on K-Part

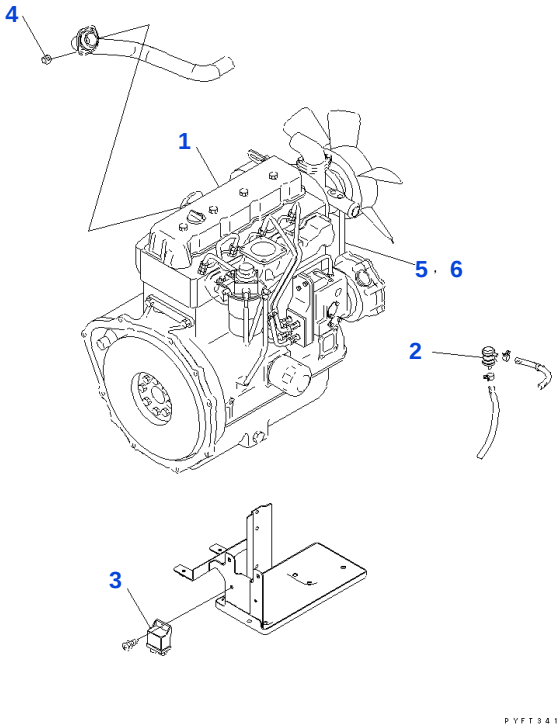

Reference: A4110-11P0A

030050 ENGINE UNIT (FOR DRY CLUTCH AND TORQUE CONVERTER) (HIGH SPEED FAN?

Item	Part No.	Part Name	Qty	Options
	37B-1DE-5682	ENGINE,4D92E, H.S.FAN	1	SN: 668500-UP
1	37B-1DE-5282	• ENGINE, 4D92E STD	1	SN: 668500-UP
2	YM129052-55630	• • FILTER	1	SN: 668500-UP
3	YM129930-77950	• • CONTROLLER	1	SN: 668500-UP
4	YM26366-080002	• • NAT	2	SN: 668500-UP
5	YM129904-42290	• V BELT	1	SN: 668500-UP
6	YM129900-42461	• PULLEY	1	SN: 668500-UP

Reference: A4110-11P0A

Open this exact parts catalogue on K-Part

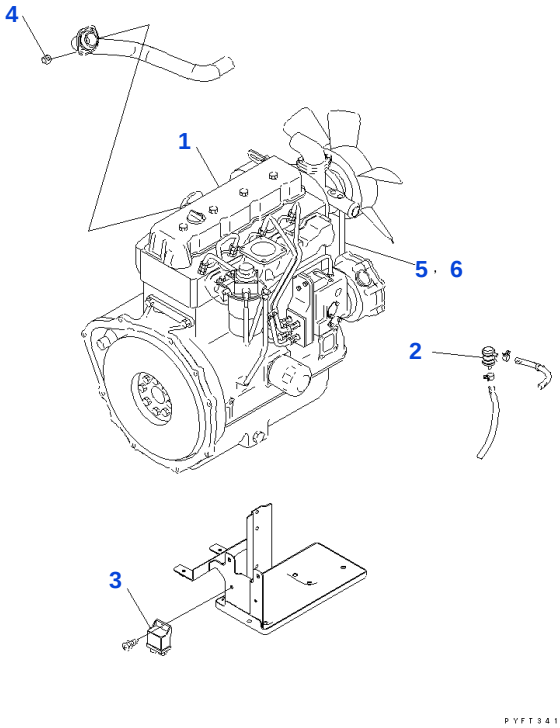

Reference: A4110-11P1

030060 ENGINE UNIT (WET CLUTCH TYPE)(HIGH SPEED FAN TYPE) (#650001-668499)

Item	Part No.	Part Name	Qty	Options
	37B-1DE-5250	ENGINE, 4D92E	1	SN: 650001-668499
1	37B-1DE-5210	• ENGINE, 4D92E	1	SN: 650001-668499
2	YM129052-55630	• • FILTER	1	SN: 650001-668499
3	YM129930-77950	• • CONTROLLER	1	SN: 650001-668499
4	YM26366-080002	• • NAT	2	SN: 650001-668499
5	129904-42290	• V BELT	1	SN: 650001-668499
6	129900-42461	• PULLEY	1	SN: 650001-668499

Reference: A4110-11P1

Open this exact parts catalogue on K-Part

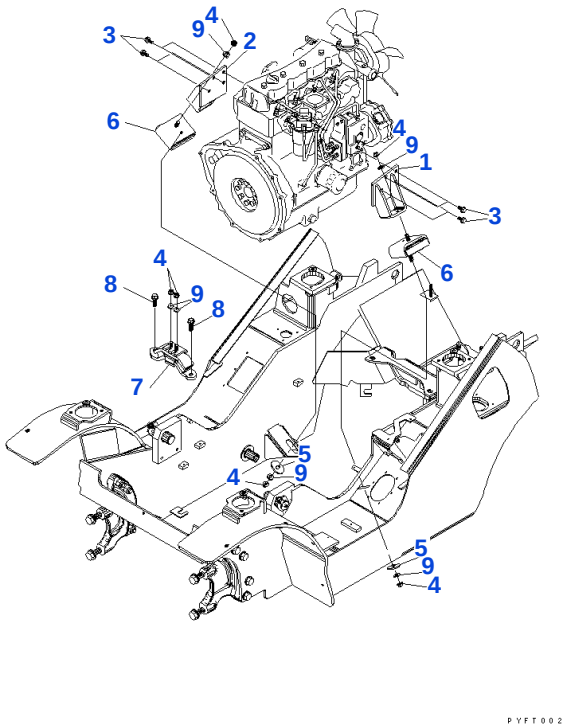

Reference: A4120-01A0

030070 ENGINE MOUNTING PARTS

Item	Part No.	Part Name	Qty	Options
1	3EB-02-52111	BRACKET, LEFT	1	SN: 660774-UP
	3EB-02-52110	☐ BRACKET, LEFT	1	SN: 650001-660773
2	3EB-02-52121	BRACKET, RIGHT	1	SN: 660774-UP
	3EB-02-52120	BRACKET, RIGHT	1	SN: 650001-660773
3	01010-81025	BOLT	8	SN: 650001-UP
	01643-31032	WASHER	8	SN: 650001-UP
4	3EB-01-51380	U NUT	6	SN: 653985-UP
	34A-01-35120	U NUT	6	SN: 650001-653984
5	3EB-01-51190	WASHER	2	SN: 650001-UP
6	3EB-01-51131	MOUNT	2	SN: 660774-UP
	3EB-01-51130	☐ MOUNT	2	SN: 650001-660773
7	3EB-02-52130	MOUNT	1	SN: 650001-UP
8	3EA-71-12790	BOLT	2	SN: 650001-UP
9	01643-31232	WASHER	6	SN: 650001-UP

Catalog signs: ☐ part above may be used instead

Reference: A4120-01A0

Open this exact parts catalogue on K-Part

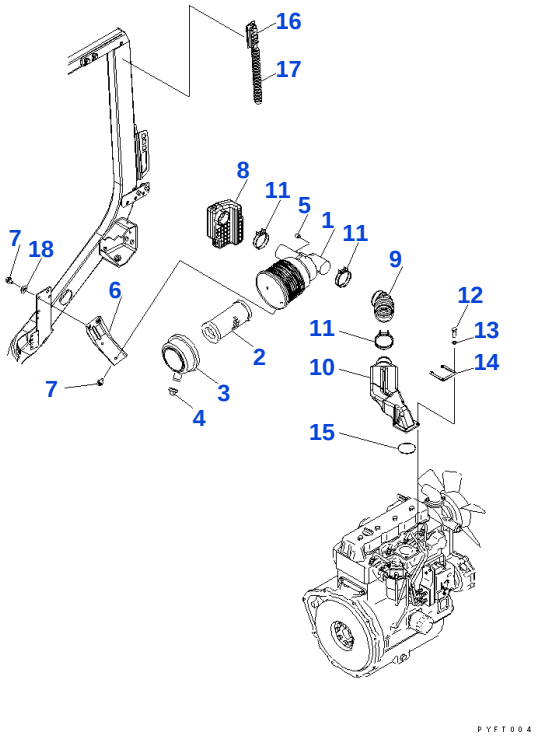

Reference: A4140-01A0

030080 AIR INTAKE CONNECTION

Item	Part No.	Part Name	Qty	Options
	3EB-02-44710	AIR CLEANER ASSEMBLY	1	SN: 650001-UP
1		• ☆ BODY ASSEMBLY	1	SN: 650001-UP
2	3EB-02-63210	• ELEMENT ASSEMBLY	1	SN: .-UP
	3EB-02-34750	• ◆ ELEMENT ASSEMBLY	1	SN: 650001-.
3	3EB-02-34761	• COVER ASSEMBLY	1	SN: 650001-UP
4	3EB-02-44770	• VALVE, BREATHER	1	SN: 650001-UP
5	3EB-02-34780	• CAP	1	SN: 650001-UP
6	3EB-02-41730	BRACKET	1	SN: 650001-UP
7	01010-80820	BOLT	4	SN: 650001-UP
	01643-30823	WASHER	4	SN: 650001-UP
8	3EB-02-52211	SILENCER	1	SN: 650001-UP
9	3EB-02-52220	HOSE	1	SN: 650001-UP
10	3EB-02-52230	CONNECTOR	1	SN: 650001-UP
11	07280-07429	CLAMP	3	SN: 650001-UP
12	01010-80825	BOLT	4	SN: 650001-UP
13	01602-20825	WASHER, SPRING	4	SN: 650001-UP
14	3EB-02-34630	PLATE	1	SN: 650001-UP
15	07000-72075	O RING	1	SN: 650001-UP
16	3EB-01-45170	COVER	1	SN: 650001-UP
17	3EB-01-51291	HOSE	1	SN: 650001-UP
18	34A-42-41130	WASHER	2	SN: 650001-UP

Catalog signs: ☆ not supplied separately: assembly only ◆ interchangeable with part above

Reference: A4140-01A0

Open this exact parts catalogue on K-Part

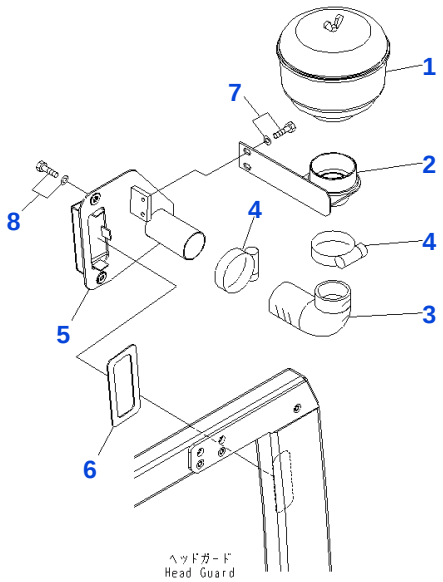

PWF7510

Reference: A4140-02P0B

030090 INTERNAL PILOT TYPE PRE-CLEANER

Item	Part No.	Part Name	Qty	Options
1	3EC-01-33310	PULLEY CLEANER	1	SN: 650001-UP
2	3EB-01-47710XC	BRACKET	1	SN: 650001-UP
3	3EB-02-14830	HOSE	1	SN: 650001-UP
4	07281-00709	CLAMP	2	SN: 650001-UP
5	3EB-01-47720XC	BRACKET	1	SN: 650001-UP
6	3EB-01-47730	GASKET	1	SN: 650001-UP
7	01010-80816	BOLT	2	SN: 650001-UP
	01643-30823	WASHER	2	SN: 650001-UP
8	01010-80820	BOLT	2	SN: 650001-UP
	01643-30823	WASHER	2	SN: 650001-UP

Reference: A4140-02P0B

Open this exact parts catalogue on K-Part

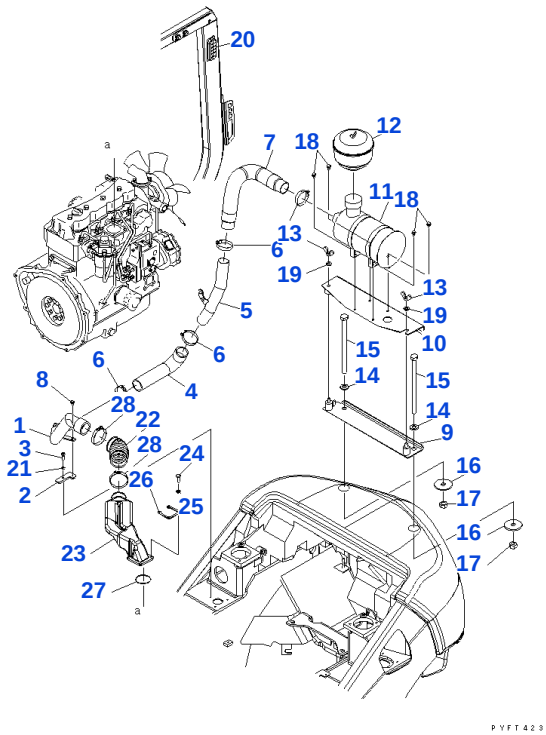

Reference: A4140-11P0

030100 EXTERNAL TYPE PRE CLEANER AND RAIN CAP (1/2)

Item	Part No.	Part Name	Qty	Options
1	3EB-02-55310SG	PIPE	1	SN: 650001-UP
2	3EB-01-46550SG	BRACKET	1	SN: 650001-UP
3	01435-00830	BOLT	1	SN: 650001-UP
4	3EB-01-46530	HOSE	1	SN: 650001-UP
5	3EA-01-53210SG	PIPE	1	SN: 650001-UP
6	07281-00709	CLAMP	4	SN: 650001-UP
7	3EA-01-46610	HOSE	1	SN: 650001-UP
8	01010-80816	BOLT	1	SN: 650001-UP
	01643-30823	WASHER	1	SN: 650001-UP
9	3EB-02-47510NK	BRACKET	1	SN: 650001-UP
10	3EA-01-32121NK	BRACKET	1	SN: 661814-UP
	3EA-01-32121YL	☐ BRACKET	1	SN: 656216-661813
	3EA-01-32120YL	BRACKET	1	SN: 650001-656215
11	3EB-02-29610	AIR CLEANER ASSEMBLY	1	SN: 656216-UP
	3EA-01-32210	AIR CLEANER ASSEMBLY	1	SN: 650001-656215
12	3EB-01-57640	PULLEY CLEANER	1	SN: 656216-UP
	3EC-01-33310	PULLEY CLEANER	1	SN: 650001-656215
13	01541-21260	NAT	2	SN: 650001-UP
14	01640-22032	WASHER	2	SN: 650001-UP
15	3EA-05-32530	BOLT	2	SN: 650001-UP
16	3EB-05-13330	WASHER	2	SN: 650001-UP
17	01580-11210	NAT	2	SN: 650001-UP
18	01010-80816	BOLT	4	SN: 650001-UP
	01643-30823	WASHER	4	SN: 650001-UP
19	01643-31232	WASHER	2	SN: 650001-UP
20	3EB-01-45170	COVER	1	SN: 656216-UP
	3EB-01-31761	COVER	1	SN: 650001-656215
21	3EA-66-33581	SEAL WASHER	1	SN: 650001-UP
22	3EB-02-52220	HOSE	1	SN: 650001-UP
23	3EB-02-52230	CONNECTOR	1	SN: 650001-UP
24	01010-80825	BOLT	4	SN: 650001-UP
25	01602-20825	WASHER, SPRING	4	SN: 650001-UP
26	3EB-02-34630	PLATE	1	SN: 650001-UP
27	07000-72075	O RING	1	SN: 650001-UP

Open this exact parts catalogue on K-Part

Get the complete PDF catalogue

Komatsu FD10-20 (JPN) Diesel Engine Forklift S/N 650001-699999 (Japanese)

$89

with PayPal | Store cart: $99

Buy this PDF on Manuals Komatsu

Check the model, serial range and language before payment.

Download instructions are emailed after payment confirmation.

This free sample contains 10 catalogue pages.