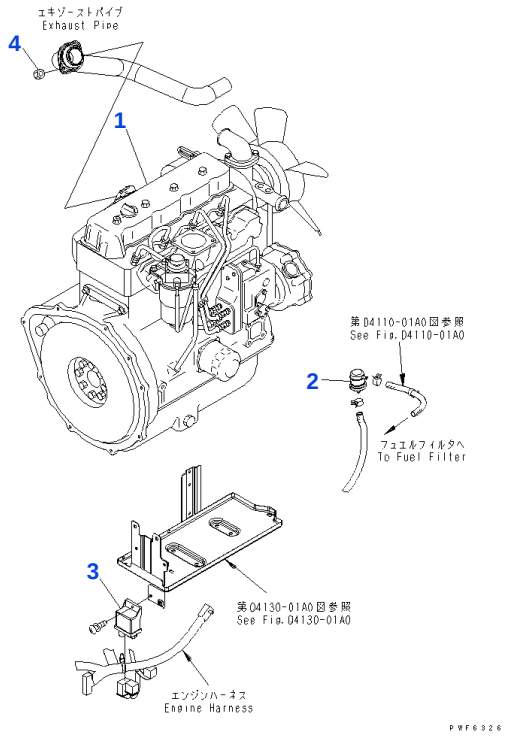

Reference: A4110-01A1

030010 ENGINE UNIT AND POWER TRAIN RELATED PARTS

Item	Part No.	Part Name	Qty	Options
1	37B-1DE-4012	ENGINE, 4D92E (FOR DRY CLUTCH OR TORCON)	1	SN: 644227-UP
	37B-1DE-4011	ENGINE, 4D92E (FOR DRY CLUTCH OR TORCON)	1	SN: 642430-644226
	37B-1DE-4010	ENGINE, 4D92E (FOR DRY CLUTCH OR TORCON)	1	SN: 640001-642429
	37B-1DE-4112	ENGINE, 4D92E (FOR WET CLUTCH)	1	SN: 644227-UP
	37B-1DE-4111	ENGINE, 4D92E (FOR WET CLUTCH)	1	SN: 642430-644226
	37B-1DE-4110	ENGINE, 4D92E (FOR WET CLUTCH)	1	SN: 640001-642429
2	YM129052-55630	• FILTER	1	SN: 640001-UP
3	YM129930-77950	• CONTROLLER,QGS	1	SN: 640001-UP
4	YM26366-080002	• NAT	2	SN: 640001-UP

Reference: A4110-01A1

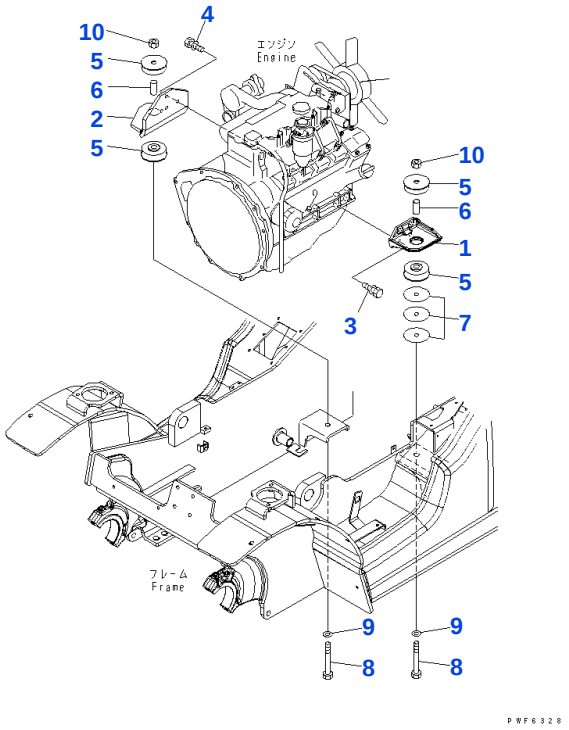

Reference: A4120-01A1

030020 ENGINE MOUNTING PARTS

Item	Part No.	Part Name	Qty	Options
1	3EB-02-44510SA	BRACKET, LEFT	1	SN: 640001-UP
2	3EB-02-44520SA	BRACKET, RIGHT	1	SN: 640001-UP
3	01010-81030	BOLT	4	SN: 640001-UP
	01643-31032	WASHER	4	SN: 640001-UP
4	01010-81030	BOLT	4	SN: 640001-UP
	01643-31032	WASHER	4	SN: 640001-UP
5	3EB-01-31640	RUBBER	4	SN: 640001-UP
6	3EB-01-41680	COLLAR	2	SN: 640001-UP
7	3EB-01-31560	SHIM, 1.0MM	3	SN: 640001-UP
8	01011-81405	BOLT	2	SN: 640001-UP
9	01643-31445	WASHER	2	SN: 640001-UP
10	3EB-50-13180	U NUT	2	SN: 640001-UP

Reference: A4120-01A1

Open this exact parts catalogue on K-Part

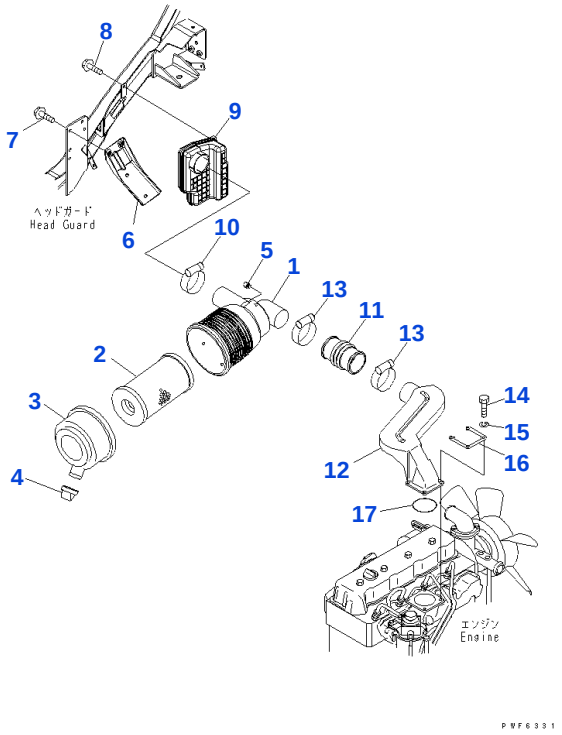

Reference: A4140-01A1

030030 AIR INTAKE CONNECTION

Item	Part No.	Part Name	Qty	Options
	3EB-02-44710	AIR CLEANER ASSEMBLY	1	SN: 640001-UP
1		• ☆ BODY ASSEMBLY	1	SN: 640001-UP
2	3EB-02-63210	• ELEMENT ASSEMBLY	1	SN: .-UP
	3EB-02-34750	• ◆ ELEMENT ASSEMBLY	1	SN: 640001-.
3	3EB-02-34761	• COVER ASSEMBLY	1	SN: 640001-UP
4	3EB-02-44770	• VALVE, VACUATOR	1	SN: 640001-UP
5	3EB-02-34780	• CAP	1	SN: 640001-UP
6	3EB-02-41730	BRACKET	1	SN: 640001-UP
7	01010-80816	BOLT	4	SN: 643762-UP
	01643-30823	WASHER	4	SN: 643762-UP
	F1210-40816	□ BOLT	4	SN: 640001-643761
8	F1210-40616	BOLT	1	SN: 640001-UP
9	3EB-02-41740	SILENCER	1	SN: 640001-UP
10	07281-00709	CLAMP	1	SN: 640001-UP
11	3EB-02-44610	HOSE	1	SN: 640001-UP
12	3EB-02-44620	CONNECTOR	1	SN: 640001-UP
13	07281-00809	CLAMP	2	SN: 640001-UP
14	01010-80825	BOLT	4	SN: 640001-UP
15	01602-20825	WASHER, SPRING	4	SN: 640001-UP
16	3EB-02-34630	PLATE	1	SN: 640001-UP
17	07000-72075	O RING	1	SN: 640001-UP

Catalog signs: ☆ not supplied separately: assembly only ◆ interchangeable with part above □ part above may be used instead

Reference: A4140-01A1

Open this exact parts catalogue on K-Part

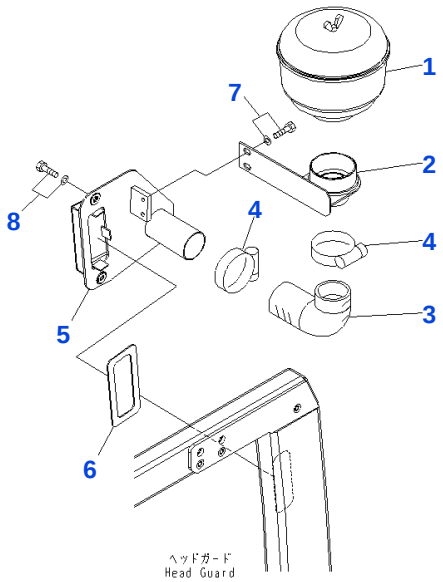

Reference: A4140-02P0

030040 INNER TYPE PRE CLEANER

Item	Part No.	Part Name	Qty	Options
1	3EC-01-33310	PULLEY CLEANER	1	SN: 640001-UP
2	3EB-01-47710YY	BRACKET	1	SN: 640001-UP
3	3EB-02-14830	HOSE	1	SN: 640001-UP
4	07281-00709	CLAMP	2	SN: 640001-UP
5	3EB-01-47720YY	BRACKET	1	SN: 640001-UP
6	3EB-01-47730	GASKET	1	SN: 640001-UP
7	01010-80816	BOLT	2	SN: 640001-UP
	01643-30823	WASHER	2	SN: 640001-UP
8	01010-80820	BOLT	2	SN: 640001-UP
	01643-30823	WASHER	2	SN: 640001-UP

Reference: A4140-02P0

Open this exact parts catalogue on K-Part

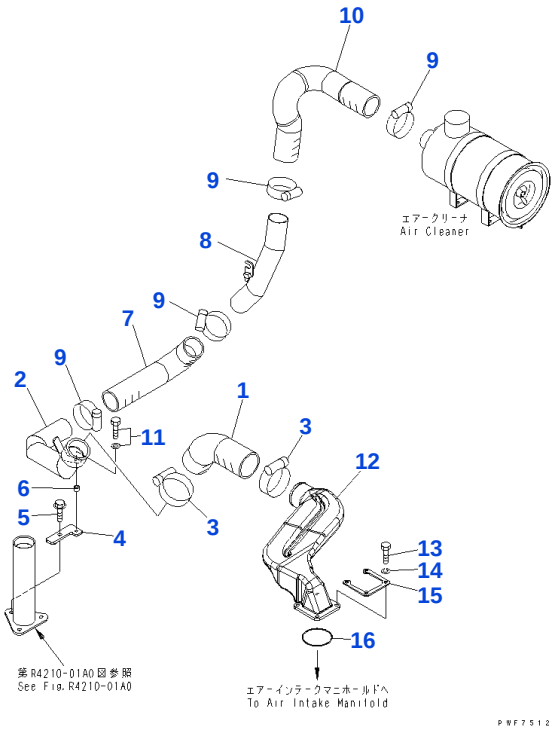

Reference: A4140-11P1

030050 OUTER MOUNTED TYPE PRE CLEANER AND RAIN CAP (1/2)

Item	Part No.	Part Name	Qty	Options
1	3EB-02-46510	HOSE	1	SN: 640001-UP
2	3EB-02-46520SA	PIPE	1	SN: 640001-UP
3	07281-00809	CLAMP	2	SN: 640001-UP
4	3EB-01-46550SA	BRACKET	1	SN: 640001-UP
5	F1110-40825	BOLT	1	SN: 640001-UP
6	3EB-01-46630SA	SPACER	1	SN: 640001-UP
7	3EB-01-46530	HOSE	1	SN: 640001-UP
8	3EA-01-46620SA	PIPE	1	SN: 640001-UP
9	07281-00709	CLAMP	4	SN: 640001-UP
10	3EA-01-46610	HOSE	1	SN: 640001-UP
11	01010-80825	BOLT	1	SN: 640001-UP
	01643-30823	WASHER	1	SN: 640001-UP
12	3EB-02-44620	CONNECTOR	1	SN: 640001-UP
13	01010-80825	BOLT	4	SN: 640001-UP
14	01602-20825	WASHER, SPRING	4	SN: 640001-UP
15	3EB-02-34630	PLATE	1	SN: 640001-UP
16	07000-72075	O RING	1	SN: 640001-UP

Reference: A4140-11P1

Open this exact parts catalogue on K-Part

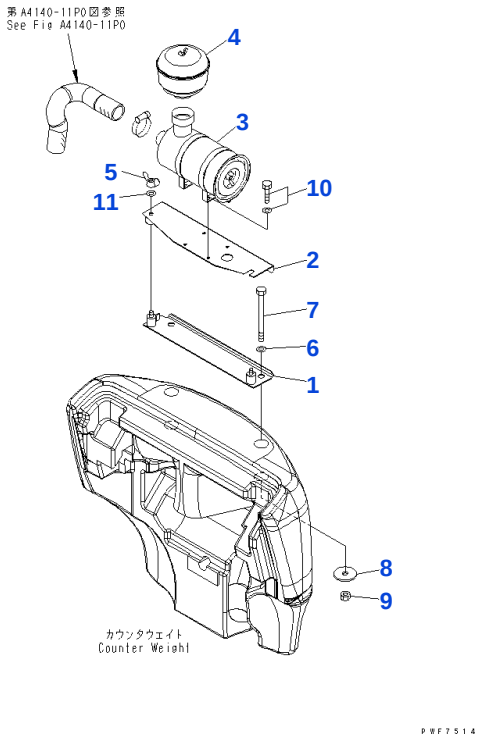

Reference: A4140-12P0

030060 OUTER TYPE PRE CLEANER (2/2)

Item	Part No.	Part Name	Qty	Options
1	3EB-02-47510YL	BRACKET	1	SN: 640001-UP
2	3EA-01-32120YL	BRACKET	1	SN: 640001-UP
3	3EA-01-32210	AIR CLEANER ASSEMBLY	1	SN: 640001-UP
4	3EC-01-33310	PULLEY CLEANER	1	SN: 640001-UP
5	01541-21260	NAT	2	SN: 640001-UP
6	01640-22032	WASHER	2	SN: 640001-UP
7	3EC-05-32930	BOLT	2	SN: 640001-UP
8	3EB-05-13330	WASHER	2	SN: 640001-UP
9	01580-12016	NAT	2	SN: 640001-UP
10	01010-80816	BOLT	4	SN: 640001-UP
	01643-30823	WASHER	4	SN: 640001-UP
11	01643-31232	WASHER	2	SN: 640001-UP

Reference: A4140-12P0

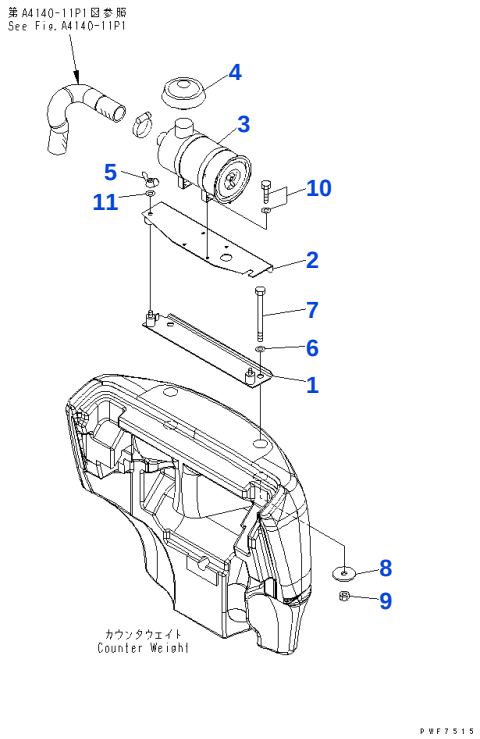

Reference: A4140-12P1

030070 RAIN CAP, EXTERNAL SPECIFICATION (2/2)

Item	Part No.	Part Name	Qty	Options
1	3EB-02-47510YL	BRACKET	1	SN: 640001-UP
2	3EA-01-32120YL	BRACKET	1	SN: 640001-UP
3	3EB-02-29610	AIR CLEANER ASSEMBLY	1	SN: 640001-UP
4	3EB-02-35410	RAIN CAP	1	SN: 640001-UP
5	01541-21260	NAT	2	SN: 640001-UP
6	01640-22032	WASHER	2	SN: 640001-UP
7	3EC-05-32930	BOLT	2	SN: 640001-UP
8	3EB-05-13330	WASHER	2	SN: 640001-UP
9	01580-12016	NAT	2	SN: 640001-UP
10	01010-80816	BOLT	4	SN: 640001-UP
	01643-30823	WASHER	4	SN: 640001-UP
11	01643-31232	WASHER	2	SN: 640001-UP

Reference: A4140-12P1

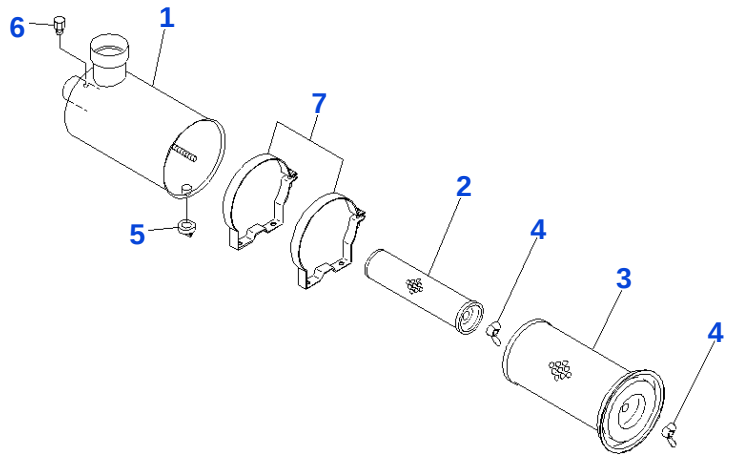

Reference: A4140-13P0

030080 AIR CLEANER (INNER PARTS) (FOR DOUBLE TYPE, PRE CLEANER)

Item	Part No.	Part Name	Qty	Options
	3EA-01-32210	AIR CLEANER ASSEMBLY	1	SN: 640001-UP
1	3EA-01-32220	• BODY ASSEMBLY	1	SN: 640001-UP
2	3EB-02-25550	• ELEMENT ASSEMBLY, INNER	1	SN: 640001-UP
3	3EC-01-11630	• ELEMENT ASSEMBLY, OUTER	1	SN: 640001-UP
4	34B-02-31650	• NUT ASSEMBLY, WING	2	SN: 640001-UP
5	3EA-01-17150	• VALVE	1	SN: 640001-UP
6	3EB-02-29490	• CAP	1	SN: 640001-UP
7	3EB-02-25830	• BAND	2	SN: 640001-UP

Reference: A4140-13P0

Open this exact parts catalogue on K-Part

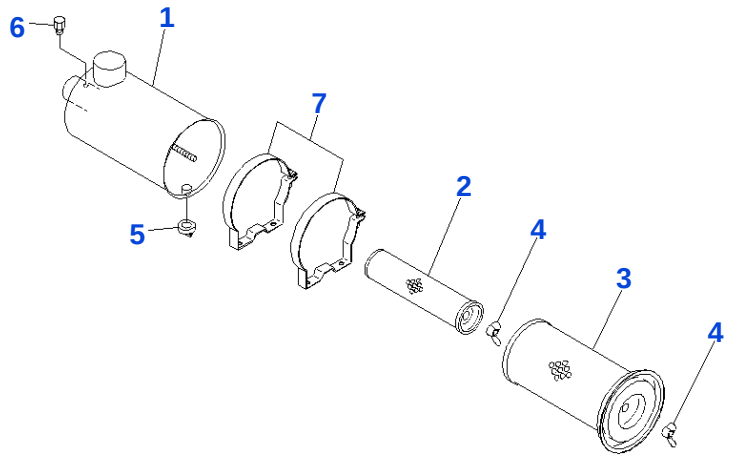

Reference: A4140-13P1

030090 AIR CLEANER (INNER PARTS) (FOR OUTER TYPE, RAIN CAP)

Item	Part No.	Part Name	Qty	Options
	3EB-02-29610	AIR CLEANER ASSEMBLY	1	SN: 640001-UP
1		• ☆ BODY ASSEMBLY	1	SN: 640001-UP
2	3EB-02-25550	• ELEMENT ASSEMBLY, INNER	1	SN: 640001-UP
3	3EC-01-11630	• ELEMENT ASSEMBLY, OUTER	1	SN: 640001-UP
4	34B-02-31650	• NUT ASSEMBLY, WING	1	SN: 640001-UP
5	3EA-01-17150	• VALVE	1	SN: 640001-UP
6	3EB-02-29490	• CAP	1	SN: 640001-UP
7	3EB-02-25830	• BAND	2	SN: 640001-UP

Catalog signs: ☆ not supplied separately: assembly only

Reference: A4140-13P1

Open this exact parts catalogue on K-Part

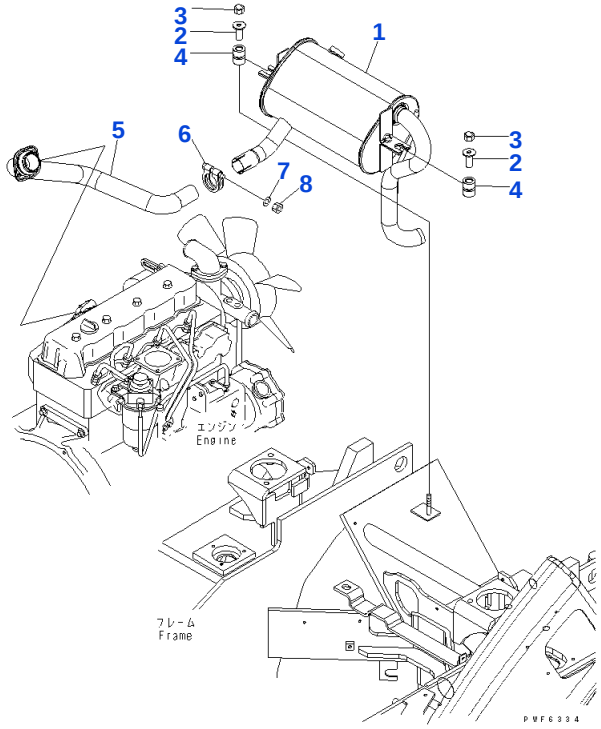

Reference: B4110-01A1

060010 MUFFLER AND EXHAUST CONNECTION

Item	Part No.	Part Name	Qty	Options
1	3EB-03-45110	MUFFLER	1	SN: 640001-UP
2	3EB-03-41130	COLLAR	2	SN: 640001-UP
3	01596-01009	NAT	2	SN: 640001-UP
4	3EB-03-41120	RUBBER	2	SN: 640001-UP
5	3EB-03-44510	PIPE	1	SN: 640001-UP
6	3EB-03-31530	CLAMP	1	SN: 640001-UP
7	01643-31032	WASHER	1	SN: 640001-UP
8	01582-11008	NAT	1	SN: 640001-UP

Reference: B4110-01A1

Open this exact parts catalogue on K-Part

Get the complete PDF catalogue

Komatsu FD10-18 (JPN) Diesel Engine Forklift S/N 640001-650000 (Japanese)

$89

with PayPal | Store cart: $99

Buy this PDF on Manuals Komatsu

Check the model, serial range and language before payment.

Download instructions are emailed after payment confirmation.

This free sample contains 10 catalogue pages.