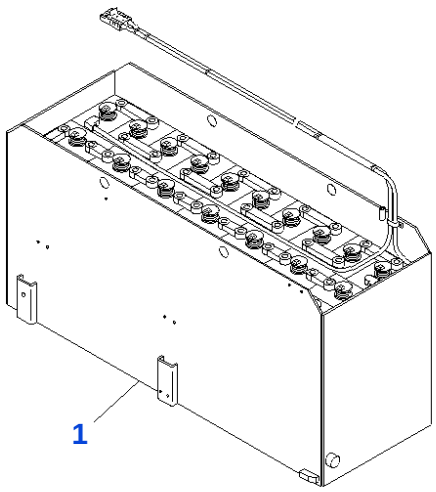

PWF5010

Reference: E4110-01A0

030010 BATTERY (EXCEPT FB25RFV/30RFV)

Item	Part No.	Part Name	Qty	Options
1	37R-5BH-2120	BATTERY ASSEMBLY, (YUASA 48V-335AH) 2.0-2.5 TON	1	SN: 4001-UP
	37R-5BH-2131	BATTERY ASSEMBLY, (YUASA 48V-390AH) 3.0 TON	1	SN: 4085-UP
	37R-5BH-2130	BATTERY ASSEMBLY, (YUASA 48V-390AH) 3.0 TON	1	SN: 4001-4084

Reference: E4110-01A0

Open this exact parts catalogue on K-Part

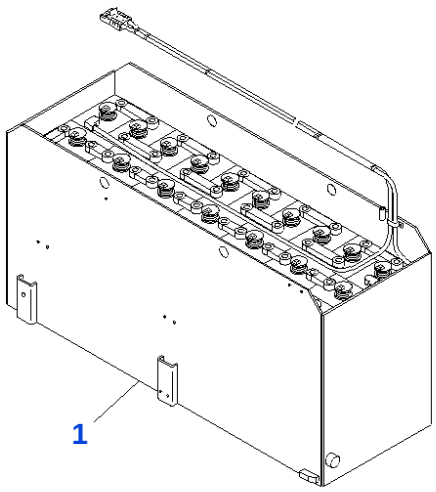

PWF5010

Reference: E4110-11A0

030020 BATTERY (FOR FB25RFV/30RFV)

Item	Part No.	Part Name	Qty	Options
1	3RB-08-65710	BATTERY ASSEMBLY, (YUASA 48V-335AH) (FOR FB25RFV)	1	SN: 4001-UP
	3RB-08-65810	BATTERY ASSEMBLY, (YUASA 48V-390AH) (FOR FB30RFV)	1	SN: 4001-UP

Reference: E4110-11A0

Open this exact parts catalogue on K-Part

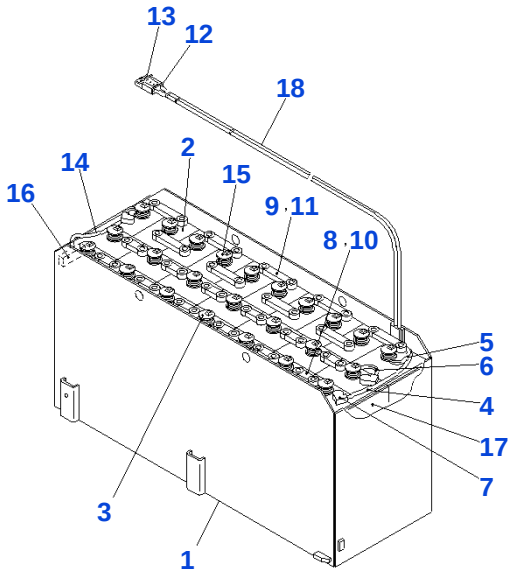

Reference: E4110-51A1

030030 BATTERY (YUASA 48V-390AH FOR 3.0 TON) (EXCEPT FB30RFV)

Item	Part No.	Part Name	Qty	Options
	37R-5BH-2131	BATTERY ASSEMBLY	1	SN: 4085-UP
	37R-5BH-2130	BATTERY ASSEMBLY	1	SN: 4001-4084
1	3RB-05-65110	• CASE	1	SN: 4001-UP
2	FB12R5-FB390	• CELL	24	SN: 4001-4084
3	FB241-VF62	• CAP	23	SN: 4001-UP
4	FBLW38-2000L	• CABLE (+)	1	SN: 4001-UP
5	FBLW38-2680L	• CABLE (-)	1	SN: 4001-UP
6	FBCW38-90WNL	• CABLE	1	SN: 4001-UP
7	FB2802-CW38L	• COVER, TERMINAL	4	SN: 4001-UP
8	FB53-27072	• CONNECTOR	12	SN: 4001-UP
9	FB53-270112	• CONNECTOR	10	SN: 4001-UP
10	FB801-27072	• COVER, CONNECTOR	12	SN: 4001-UP
11	FB801-270UCE	• COVER, CONNECTOR	10	SN: 4001-UP
12	FB2828-WG38	• GROMMET	1	SN: 4001-UP
13	34A-07-12130	• PLUG	1	SN: 4001-UP
14	FB2826-95FT120	• TUBE	1	SN: 4001-UP
15	FB247-VF6S2	• SENSOR	1	SN: 4001-UP
16	FB247-ALM2	• INDICATOR	1	SN: 4001-UP
17	FB2804-S21706	• PLATE	1	SN: 4001-UP
18	FB2826-16T300	• TUBE	2	SN: 4001-UP

Reference: E4110-51A1

Open this exact parts catalogue on K-Part

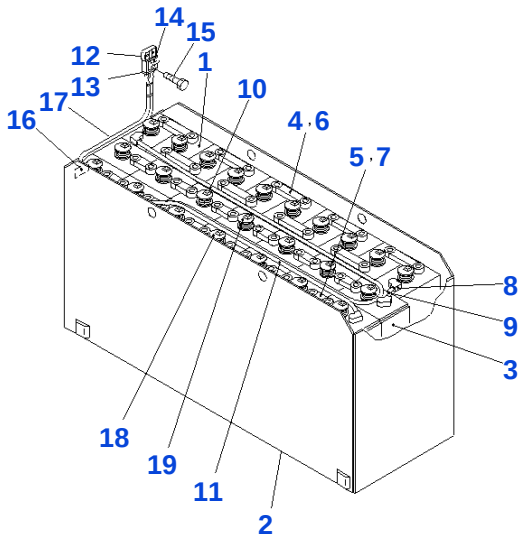

Reference: E4110-61A0

030040 BATTERY (YUA-SA 48V-390AH) (FOR FB30RFV)

Item	Part No.	Part Name	Qty	Options
	3RB-08-65810	BATTERY ASSEMBLY	1	SN: 4001-UP
1	FB12R5-FB390	• CELL	24	SN: 4001-UP
2	3RB-08-65521	• CASE	1	SN: 4001-UP
3	FB2804-S21706	• PLATE	1	SN: 4001-UP
4	FB53-27072	• CONNECTOR	12	SN: 4001-UP
5	FB53-270112	• CONNECTOR	10	SN: 4001-UP
6	FB801-27072	• COVER, CONNECTOR	12	SN: 4001-UP
7	FB801-270USE	• COVER, CONNECTOR	10	SN: 4001-UP
8	FB2802-CW38L	• COVER, TERMINAL	4	SN: 4001-UP
9	FBCW38-90WNL	• CABLE	1	SN: 4001-UP
10	FBLW38-1690L	• CABLE (+)	1	SN: 4001-UP
11	FBLW38-2850L	• CABLE (-)	1	SN: 4001-UP
12	34A-07-12130	• PLUG	1	SN: 4001-UP
13	FB2828-WG38	• GROMMET	1	SN: 4001-UP
14	34A-51-33251	• PLATE	1	SN: 4001-UP
15	FB964-M6X35	• SCREW	2	SN: 4001-UP
16	FB247-ALM2	• INDICATOR	1	SN: 4001-UP
17	FB2826-16T600	• TUBE	2	SN: 4001-UP
18	FB241-VF62	• CAP	23	SN: 4001-UP
19	FB247-VF6S2	• SENSOR	1	SN: 4001-UP

Reference: E4110-61A0

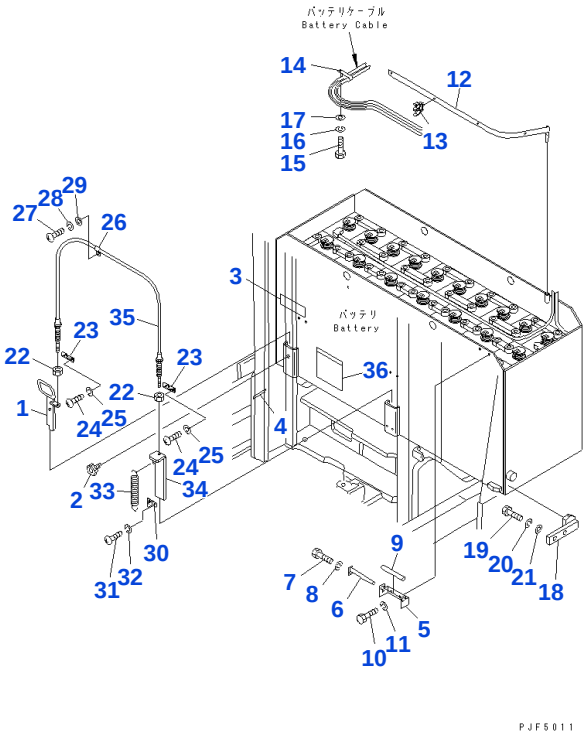

Reference: E4180-01A0

030050 BATTERY LEVER

Item	Part No.	Part Name	Qty	Options
1	3RA-08-61710	LEVER	1	SN: 4001-UP
2	3RA-08-61150	NOBU	1	SN: 4001-UP
3	3RB-96-66110	CUSHION PLATE	1	SN: 4001-UP
4	3RA-96-23512	MARK	2	SN: 4001-UP
5	3RA-08-61130	BRACKET	1	SN: 4001-UP
6	3EB-61-11222	SHAFT	1	SN: 4001-UP
7	01010-80612	BOLT	1	SN: 4001-UP
8	01602-20619	WASHER, SPRING	1	SN: 4001-UP
9	3RA-08-61140	PIPE	1	SN: 4001-UP
10	01010-80616	BOLT	2	SN: 4001-UP
11	01602-20619	WASHER, SPRING	2	SN: 4001-UP
12	3RA-08-61160	BAR	1	SN: 4001-UP
13	3RA-08-61171	CLAMP	4	SN: 4001-UP
14	08036-03014	CLIP	1	SN: 4001-UP
15	01010-81016	BOLT	1	SN: 4001-UP
16	01602-21030	WASHER, SPRING	1	SN: 4001-UP
17	01642-21016	WASHER	1	SN: 4001-UP
18	3RB-08-65110YS	BRACKET	1	SN: 4001-UP
19	01010-80825	BOLT	2	SN: 4001-UP
20	01602-20825	WASHER, SPRING	2	SN: 4001-UP
21	01640-20816	WASHER	2	SN: 4001-UP
22	01580-10806	NAT	2	SN: 4001-UP
23	3RA-08-61741	PLATE	2	SN: 4001-UP
24	01220-40610	SCREW	4	SN: 4001-UP
25	01602-20619	WASHER, SPRING	4	SN: 4001-UP
26	34A-72-18230	CLIP	1	SN: 4001-UP
27	01220-40610	SCREW	1	SN: 4001-UP
28	01602-20619	WASHER, SPRING	1	SN: 4001-UP
29	01642-20608	WASHER	1	SN: 4001-UP
30	3RA-08-61751	BRACKET	1	SN: 4001-UP
31	01220-40610	SCREW	2	SN: 4001-UP
32	01602-20619	WASHER, SPRING	2	SN: 4001-UP
33	3RB-05-65920	SPRING	1	SN: 4001-UP
34	3RA-08-61722	LEVER	1	SN: 4001-UP

Open this exact parts catalogue on K-Part

Item	Part No.	Part Name	Qty	Options
35	3RB-05-65910	CABLE	1	SN: 4001-UP
36	3RB-96-66120	PLATE, CAUTION, JAPANESE	1	SN: 4001-UP
	3RB-96-66130	PLATE, CUSHION, ENGLISH	1	SN: 4001-UP

Reference: E4180-01A0

Open this exact parts catalogue on K-Part

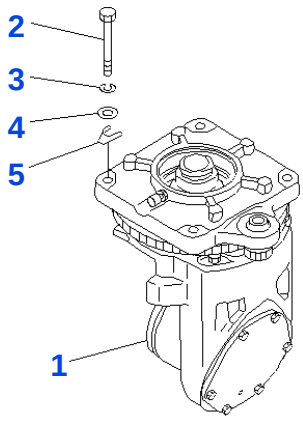

PWF5012

Reference: F4310-01A1

060010 POWER LINE (COLD AREA)

Item	Part No.	Part Name	Qty	Options
1	3RB-22-65280YA	TRANSFER ASSEMBLY	1	SN: 4001-UP
	3RB-22-65280WA	TRANSFORMER ASSEMBLY, (COLD)	1	SN: 4001-UP
2	01016-51890	BOLT	4	SN: 4001-UP
3	01602-21854	WASHER, SPRING	4	SN: 4001-UP
4	01643-31845	WASHER	4	SN: 4001-UP
5	3RB-22-51270	SPACER	8	SN: 4001-UP

Reference: F4310-01A1

Open this exact parts catalogue on K-Part

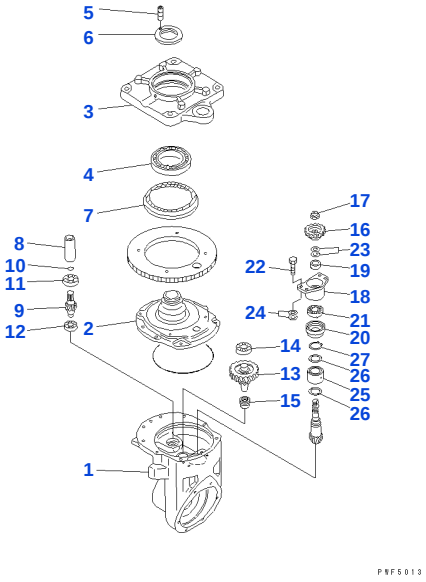

Reference: F4310-51A0

060020 POWER LINE (TRANSFORMER INNER PARTS) (2.0 TON TO 3.0 TON) (COLD TYPE) (1/2)

Item	Part No.	Part Name	Qty	Options
	3RB-22-65180YA	TRANSFORMER ASSEMBLY, (FOR 2.0 TON AND 2.5 TON)	1	SN: 4001-UP
	3RB-22-65180WA	TRANSFER ASSEMBLY, (2.0 TON AND 2.5 TON COLD) INCLUDES COMPONENTS OF ASSEMBLY FIG.F4310-51A0 AND FIG.F4310-52A0.	1	SN: 4001-UP
	3RB-22-65280YA	TRANSFORMER ASSEMBLY, (FOR 3 TON)	1	SN: 4001-UP
	3RB-22-65280WA	TRANSFER ASSEMBLY, (3.0T COLD/2.5-3.0T RFV/RFQ) THE COMPONENTS OF THIS ASSEMBLY INCLUDE FIG.F4310-51A0 AND FIG.F4310-52A1.	1	SN: 4001-UP
1	3RB-22-51111YA	• CASE	1	SN: 4156-UP
	3RB-22-51110YA	• CASE	1	SN: 4001-4155
	3RB-22-51111WA	• CASE, (COLD)	1	SN: 4156-UP
	3RB-22-51110WA	• CASE, (COLD)	1	SN: 4001-4155
2	3RB-22-51120YA	• COVER	1	SN: 4001-UP
	3RB-22-51120WA	• COVER,(COLD)	1	SN: 4001-UP
3	3RB-22-51311YA	• SUPPORT	1	SN: 4461-UP
	3RB-22-51310YA	• SUPPORT	1	SN: 4001-4460
	3RB-22-51311WA	• SUPPORT, (COLD)	1	SN: 4461-UP
	3RB-22-51310WA	• SUPPORT, (COLD)	1	SN: 4001-4460
4	3RB-22-51380	• BEARING	2	SN: 4461-UP
	06000-32924	• BEARING	2	SN: 4001-4460
5	01310-01032	• SCREW	1	SN: 4001-UP
6	3RB-22-51360	• NAT	1	SN: 4001-UP
7	3RA-22-61130	• SEAL	1	SN: 4001-UP
8	3RB-22-51140	• JOINT	1	SN: 4001-UP
9	3RB-22-51150	• GEAR, (Z=16, 17)	1	SN: 4001-UP
10	07000-03025	• O RING	1	SN: 4001-UP
11	06004-06206	• BEARING	1	SN: 4001-UP
12	06000-06304	• BEARING	1	SN: 4001-UP
13	3RB-22-51320	• GEAR, (Z=49,16)	1	SN: 4001-UP
14	3RB-22-51490	• BEARING	1	SN: 4001-UP
15	3RA-22-61160	• BEARING	1	SN: 4001-UP
16	3RB-22-51330	• GEAR, (Z=26)	1	SN: 4001-UP
17	3RB-22-51240	• NAT	1	SN: 4001-UP
18	3RB-22-51180	• GAUGE	1	SN: 4001-UP
19	3RB-22-51230	• COLLAR	1	SN: 4001-UP
20	3RB-22-51220	• SPACER	1	SN: 4001-UP
21	06002-30306	• BEARING	2	SN: 4001-UP
22	01010-81035	• BOLT	4	SN: 4001-UP
23	3RA-22-00040	• SIM ASSEMBLY	1	SN: 4001-UP
		• • ☆ SHIM, 0.5MM		SN: 4001-UP
		• • ☆ SHIM, 0.2MM		SN: 4001-UP
		• • ☆ SHIM, 0.3MM		SN: 4001-UP
24	3RB-22-00050	• SIM ASSEMBLY	1	SN: 4001-UP
		• • ☆ SHIM		SN: 4001-UP
		• • ☆ SHIM		SN: 4001-UP

Item	Part No.	Part Name	Qty	Options
		• • ☆ SHIM		SN: 4001-UP
		• • ☆ SHIM		SN: 4001-UP
25	3RB-22-51190	• BEARING	1	SN: 4001-UP
26	3RB-22-51210	• COLLAR	2	SN: 4001-UP
27	04064-04518	• RING, SNAP	1	SN: 4001-UP

Catalog signs: ☆ not supplied separately: assembly only

Reference: F4310-51A0

Open this exact parts catalogue on K-Part

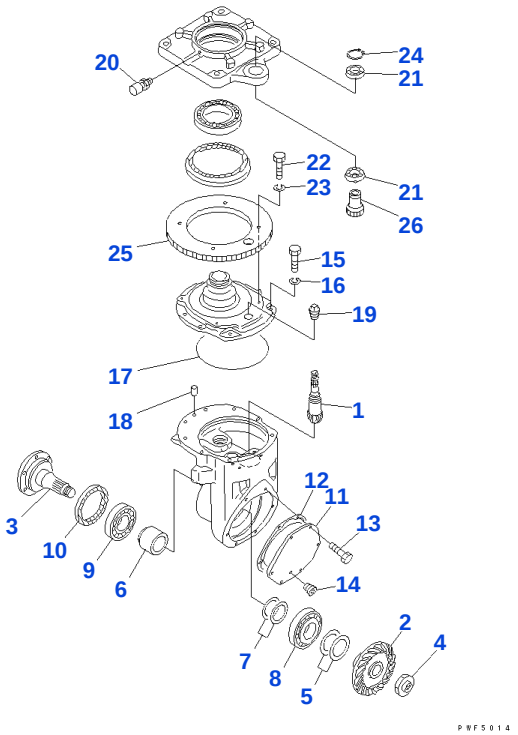

Reference: F4310-52A1

060030 POWER LINE (TRANSFORMER INNER PARTS) (FOR 3.0 TON) (COLD FUKUMU) (2/2)

Item	Part No.	Part Name	Qty	Options
	3RB-22-65280YA	TRANSFER ASSEMBLY	1	SN: 4001-UP
	3RB-22-65280WA	TRANSFORMER ASSEMBLY, (COLD)	1	SN: 4001-UP
		THE COMPONENTS OF THIS ASSEMBLY INCLUDE FIG.F4310-51A0 AND FIG.F4310-52A1.		
	3RB-22-51070	• GEAR ASSEMBLY, BEVEL AND PINION SHAFT	1	SN: 4001-UP
1		• • ☆ SHAFT, PINION (Z=9)	1	SN: 4001-UP
2		• • ☆ GEAR, BEVEL (Z=40)	1	SN: 4001-UP
3	3RB-22-51260	• SHAFT	1	SN: 4001-UP
4	3RA-22-61240	• NAT	1	SN: 4001-UP
5	3RB-22-00060	• SIM ASSEMBLY	1	SN: 4001-UP
		• • ☆ SHIM, 0.2MM		SN: 4001-UP
		• • ☆ SHIM		SN: 4001-UP
6	3RB-22-51370	• SPACER	1	SN: 4001-UP
7	3RB-22-00070	• SIM ASSEMBLY	1	SN: 4001-UP
		• • ☆ SHIM		SN: 4001-UP
		• • ☆ SHIM		SN: 4001-UP
		• • ☆ SHIM		SN: 4001-UP
		• • ☆ SHIM		SN: 4001-UP
8	06000-30313	• BEARING	1	SN: 4001-UP
9	06000-30311	• BEARING	1	SN: 4001-UP
10	07012-00110	• SEAL	1	SN: 4001-UP
11	3RB-22-51280YA	• COVER	1	SN: 4001-UP
	3RB-22-51280WA	• COVER,(COLD)	1	SN: 4001-UP
12	3RB-22-51290	• GASKET	1	SN: 4001-UP
13	01010-80816	• BOLT	6	SN: 4001-UP
	01020-00816	• BOLT,(COLD)	6	SN: 4001-UP
14	07043-00211	• PLUG	1	SN: 4001-UP
15	01010-81035	• BOLT	10	SN: 4001-UP
16	01602-21030	• WASHER, SPRING	10	SN: 4001-UP
17	07000-05220	• O RING	1	SN: 4001-UP
18	04020-01228	• PIN, DOWEL	1	SN: 4001-UP
19	07042-00617	• PLUG	1	SN: 4001-UP
20	07030-01030	• BREATHER	1	SN: 4001-UP

Open this exact parts catalogue on K-Part

Get the complete PDF catalogue

Komatsu FB30RFQ-4 (JPN) Battery Forklift-Reach Type S/N 4001-5485 (Japanese)

$89

with PayPal | Store cart: $99

Buy this PDF on Manuals Komatsu

Check the model, serial range and language before payment.

Download instructions are emailed after payment confirmation.

This free sample contains 10 catalogue pages.