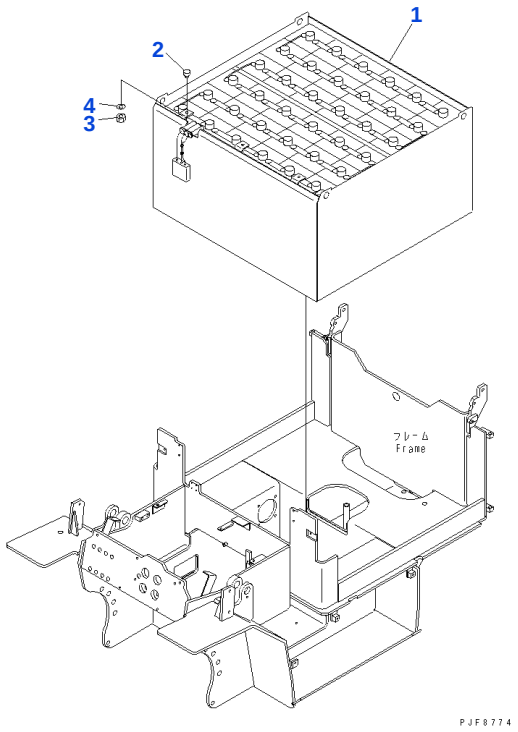

Reference: E4110-01A0

030010 Battery

Item	Part No.	Part Name	Qty	Options
1	37B-2D6-5010	BATTERY ASSEMBLY, (GY 72V-450AH)	1	SN: 814001-UP
	37B-2D6-5020	BATTERY ASSEMBLY, (GY 72V-545AH)	1	SN: 814001-UP
	3BA-55-44130	• PLUG	1	SN: 814001-UP
	3BB-05-53110	• CASE	1	SN: 814001-UP
	3BB-05-53150	• SUB WEIGHT,(GY 72V-450AH)	2	SN: 814001-UP
	3BB-05-53160	• SUB WEIGHT, (GY 72V-545AH)	2	SN: 814001-UP
2	3EB-50-31130	CUSHION	3	SN: 814001-UP
3	01580-10806	NAT	3	SN: 814001-UP
4	01640-20816	WASHER	3	SN: 814001-UP

Reference: E4110-01A0

Open this exact parts catalogue on K-Part

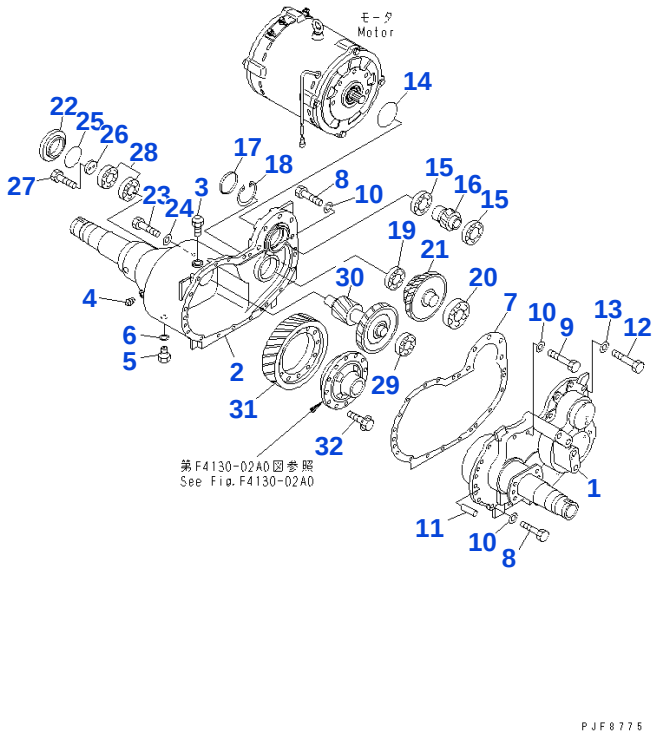

Reference: F4130-01A0

060010 POWER TRAIN (CASE)

Item	Part No.	Part Name	Qty	Options
1	3BB-21-53210	CASE ASSEMBLY	1	SN: 814001-UP
2	3BB-21-53310	CASE ASSEMBLY	1	SN: 814001-UP
3	3EB-21-15211	CAP	1	SN: 814001-UP
4	07042-20312	PLUG	1	SN: 814001-UP
5	34B-41-12910	PLUG (KIT)	1	SN: 814001-UP
6	34B-41-12920	GASKET (KIT)	1	SN: 814001-UP
7	3BB-21-31430	GASKET (KIT)	1	SN: 814001-UP
8	01010-81240	BOLT	12	SN: 814001-UP
9	01010-81280	BOLT	4	SN: 814001-UP
10	01643-31232	WASHER	16	SN: 814001-UP
11	04020-01228	PIN, DOWEL	2	SN: 814001-UP
12	01050-51480	BOLT	5	SN: 814001-UP
13	01643-31445	WASHER	5	SN: 814001-UP
14	07000-02090	O RING	1	SN: 814001-UP
15	06000-06209	BEARING	2	SN: 814001-UP
16	3BA-21-41510	GEAR	1	SN: 814001-UP
17	3SB-15-11350	CAP	1	SN: 814001-UP
18	04065-08025	RING, SNAP	1	SN: 814001-UP
19	3BB-21-31350	BEARING	1	SN: 814001-UP
20	06000-06309	BEARING	1	SN: 814001-UP
21	3BB-21-31721	GEAR	1	SN: 814001-UP
22	3BB-21-31410	GAUGE	1	SN: 814001-UP
23	01010-81240	BOLT	3	SN: 814001-UP
24	01643-31232	WASHER	3	SN: 814001-UP
25	07000-02080	O RING	1	SN: 814001-UP
26	3EB-14-11220	PLATE	1	SN: 814001-UP
27	01010-80825	BOLT	2	SN: 814001-UP
28	3BB-21-31380	BEARING	2	SN: 814001-UP
29	3BB-22-36230	BEARING	1	SN: 814001-UP
30	3BB-21-31730	SHAFT ASSEMBLY	1	SN: 814001-UP
31	3BB-21-31561	GEAR	1	SN: 814001-UP
32	3EB-21-11230	BOLT	12	SN: 814001-UP
		SERVICE KIT		
KIT	3BB-21-04020	GASKET KIT	1	SN: 814001-UP

Open this exact parts catalogue on K-Part

Open this exact parts catalogue on K-Part

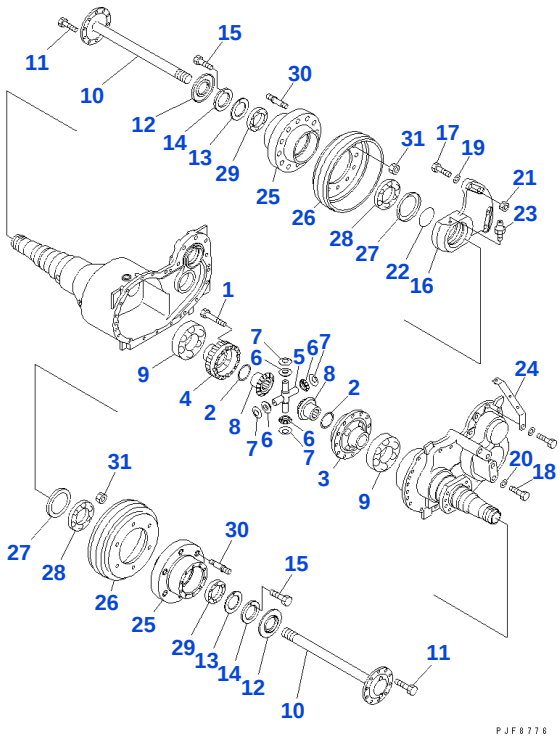

Reference: F4130-02A0

060020 POWER TRAIN (GEAR)

Item	Part No.	Part Name	Qty	Options
	3BB-21-41161	DIFFERENTIAL SUB ASSEMBLY	1	SN: 814001-UP
1	01010-81070	• BOLT	12	SN: 814001-UP
2	34B-21-12141	• BUSH	2	SN: 814001-UP
3	3BB-21-41171	• CASE ASSEMBLY	1	SN: 814001-UP
4	3BB-21-41181	• CASE ASSEMBLY	1	SN: 814001-UP
5	3EB-21-11160	• SPIDER	1	SN: 814001-UP
6	3EB-21-11341	• GEAR	4	SN: 814001-UP
7	3EB-21-11370	• BUSH	4	SN: 814001-UP
8	3EB-21-31141	• GEAR	2	SN: 814001-UP
9	06000-06315	BEARING	2	SN: 814001-UP
10	3EB-21-32162	SHAFT	2	SN: 814001-UP
11	3EB-21-42220	BOLT	16	SN: 814001-UP
12	3EB-21-32180	SEAL (KIT)	2	SN: 814001-UP
13	3BB-21-31230	PLATE	2	SN: 814001-UP
14	3BB-21-31240	NAT	2	SN: 814001-UP
15	01010-80612	BOLT	2	SN: 814001-UP
16	3BB-21-43151	SUPPORT, RIGHT	1	SN: 814001-UP
17	01010-81870	BOLT	4	SN: 814001-UP
18	01010-82265	BOLT	4	SN: 814001-UP
19	01643-31845	WASHER	4	SN: 814001-UP
20	01643-32260	WASHER	4	SN: 814001-UP
21	01580-11815	NAT	4	SN: 814001-UP
22	3EB-21-32190	O RING	1	SN: 814001-UP
23	07020-00001	FITTING, GREASE	1	SN: 814001-UP
24	3BB-66-55330	BRACKET	1	SN: 814001-UP
25	3EB-21-32171	HUB	2	SN: 814001-UP
26	3EB-21-25130	DRUM	2	SN: 814001-UP
27	3EB-21-15130	SEAL (KIT)	2	SN: 814001-UP
28	316-22-21250	BEARING	2	SN: 814001-UP
29	06002-32213	BEARING	2	SN: 814001-UP
30	3EB-21-25170	BOLT	12	SN: 814001-UP
31	01582-11815	NAT	12	SN: 814001-UP
		SERVICE KIT		
KIT	3EB-21-05060	SEAL KIT	2	SN: 814001-UP

Open this exact parts catalogue on K-Part

Open this exact parts catalogue on K-Part

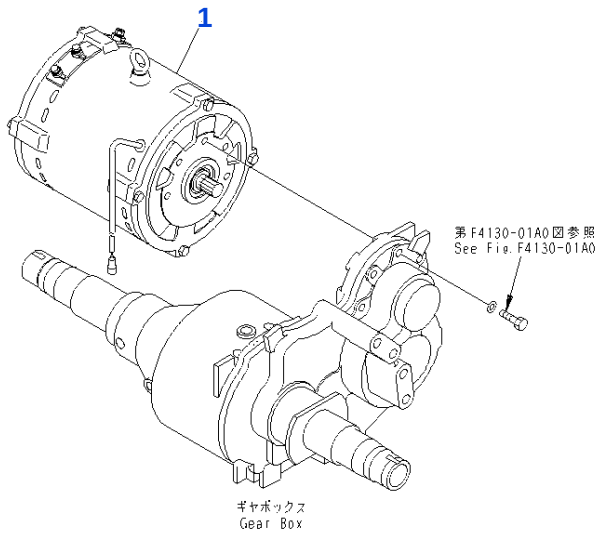

Reference: G4110-01A0

090010 TRACTION MOTOR

Item	Part No.	Part Name	Qty	Options
1	3BB-17-53110	MOTOR ASSEMBLY	1	SN: 814001-UP

Reference: G4110-01A0

Open this exact parts catalogue on K-Part

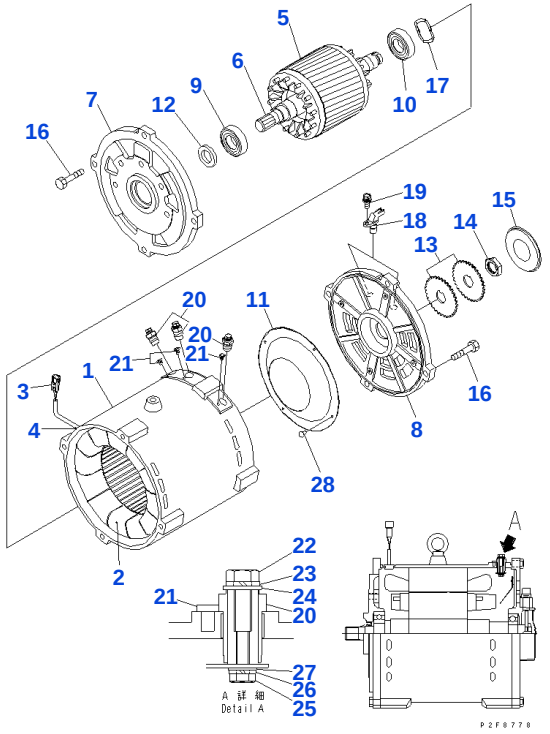

Reference: G4110-51A0

090020 TRACTION MOTOR (INNER PARTS)

Item	Part No.	Part Name	Qty	Options
	3BB-17-53110	MOTOR ASSEMBLY	1	SN: 814001-UP
1	30B-17-12110	• FRAME	1	SN: 814001-UP
2		• • ☆ STATOR, CORE	1	SN: 814001-UP
3	30B-17-12120	• THERMOSTAT	1	SN: 814001-UP
4		• • ☆ BUSH	1	SN: 814001-UP
5	30B-17-12130	• ROTOR, CORE	1	SN: 814001-UP
6		• • ☆ SHAFT	1	SN: 814001-UP
7	30B-17-12140	• BRACKET, FRONT	1	SN: 814001-UP
8	30B-17-12150	• BRACKET, REAR	1	SN: 814001-UP
9	30B-17-12160	• BEARING, FRONT	1	SN: 814001-UP
10	30B-17-12170	• BEARING, REAR	1	SN: 814001-UP
11	30B-17-11360	• GUIDE	1	SN: 814001-UP
12	30B-17-12180	• SEAL, OIL	1	SN: 814001-UP
13	30B-17-11270	• GEAR	2	SN: 814001-UP
14	30B-17-11280	• NAT	1	SN: 814001-UP
15	30B-17-11310	• SENSOR	1	SN: 814001-UP
16	30B-17-12190	• BOLT	8	SN: 814001-UP
17	30B-17-12210	• WASHER	1	SN: 814001-UP
18	30B-17-12220	• SENSOR, SPEED	2	SN: 814001-UP
19	30B-17-12230	• BOLT	2	SN: 814001-UP
20	30B-17-12240	• STUD	3	SN: 814001-UP
21	30B-17-12280	• SCREW	3	SN: 814001-UP
22	30A-17-11310	• BOLT	3	SN: 814001-UP
23	30B-17-11210	• WASHER	3	SN: 814001-UP
24	30A-17-11360	• WASHER	3	SN: 814001-UP
25	30B-17-12260	• BOLT	3	SN: 814001-UP
26	30A-17-11320	• WASHER	3	SN: 814001-UP
27	30A-17-11330	• WASHER	3	SN: 814001-UP
28	30B-17-11290	• REBET	4	SN: 814001-UP

Catalog signs: ☆ not supplied separately: assembly only

Reference: G4110-51A0

Open this exact parts catalogue on K-Part

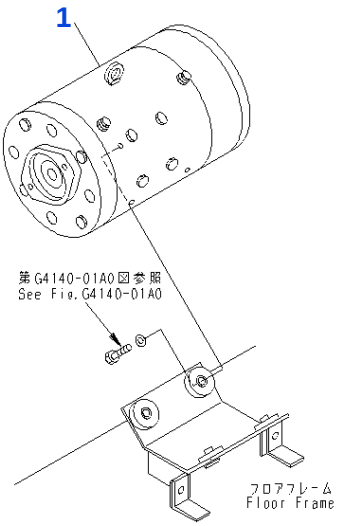

PTF3188

Reference: G4131-01A0

090030 PUMP MOTOR

Item	Part No.	Part Name	Qty	Options
1	3BB-18-43112	PUMP MOTOR ASSEMBLY	1	SN: 814001-UP

Reference: G4131-01A0

Open this exact parts catalogue on K-Part

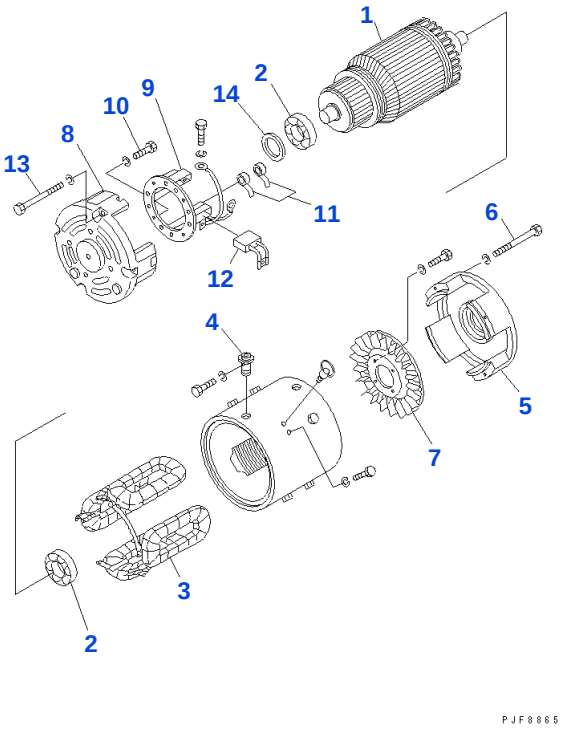

Reference: G4131-51A0

090040 PUMP MOTOR (INNER PARTS)

Item	Part No.	Part Name	Qty	Options
	3BB-18-43112	PUMP MOTOR ASSEMBLY	1	SN: 814001-UP
1	FB0-51100-2171	• ARMATURE ASSEMBLY	1	SN: 814001-UP
2	FB1-0454-62067	• BEARING, BALL	2	SN: 814001-UP
3	FB1-51230-2150	• FIELD COIL ASSEMBLY	1	SN: 814001-UP
4	FB0-51787-0030	• TERMINAL	2	SN: 814001-UP
5	FB0-51311-1890	• FRONT BRACKET	1	SN: 814001-UP
6	FB0-0080-08602	• BOLT	4	SN: 814001-UP
7	FB0-51420-0270	• FAN ASSEMBLY	1	SN: 814001-UP
	FB0-51700-2040	• REAR BRACKET ASSEMBLY	1	SN: 814001-UP
8	FB0-51711-1760	• • REAR BRACKET	1	SN: 814001-UP
9	FB0-51730-0640	• • HOLDER RING ASSEMBLY	1	SN: 814001-UP
10	FB0-09001-4950	• • BOLT	4	SN: 814001-UP
11	FB0-51913-0330	• SPRING	8	SN: 814001-UP
12	FB0-51740-0901	• BRUSH ASSEMBLY	4	SN: 814001-UP
13	FB0-0080-08852	• BOLT	4	SN: 814001-UP
14	FB1-51921-0160	• WASHER	2	SN: 814001-UP

Reference: G4131-51A0

Open this exact parts catalogue on K-Part

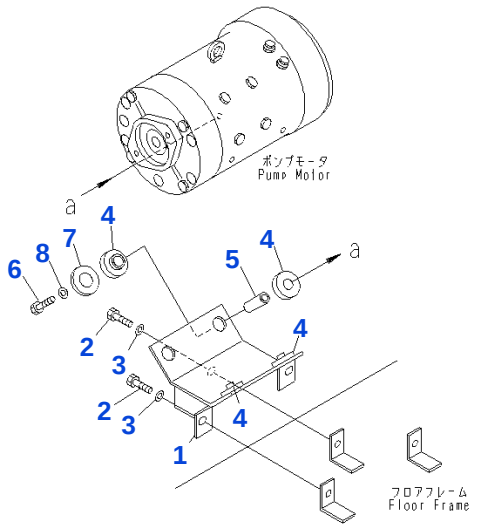

PTF3189

Reference: G4140-01A0

090050 PUMP MOTOR MOUNTING PARTS

Item	Part No.	Part Name	Qty	Options
1	3BB-18-41510SA	BRACKET	1	SN: 814001-UP
2	01010-81025	BOLT	3	SN: 814001-UP
3	01643-31032	WASHER	3	SN: 814001-UP
4	3BB-18-21220	CUSHION	8	SN: 814001-UP
5	3BB-18-21231SA	PIPE	4	SN: 814001-UP
6	01010-81045	BOLT	4	SN: 814001-UP
7	01643-31845	WASHER	4	SN: 814001-UP
8	01643-31032	WASHER	4	SN: 814001-UP

Reference: G4140-01A0

Open this exact parts catalogue on K-Part

Get the complete PDF catalogue

Komatsu FB30-11 (JPN) Battery Forklift-Counter-Balance Type S/N 814001-899999 (Japanese)

$89

with PayPal | Store cart: $99

Buy this PDF on Manuals Komatsu

Check the model, serial range and language before payment.

Download instructions are emailed after payment confirmation.

This free sample contains 10 catalogue pages.