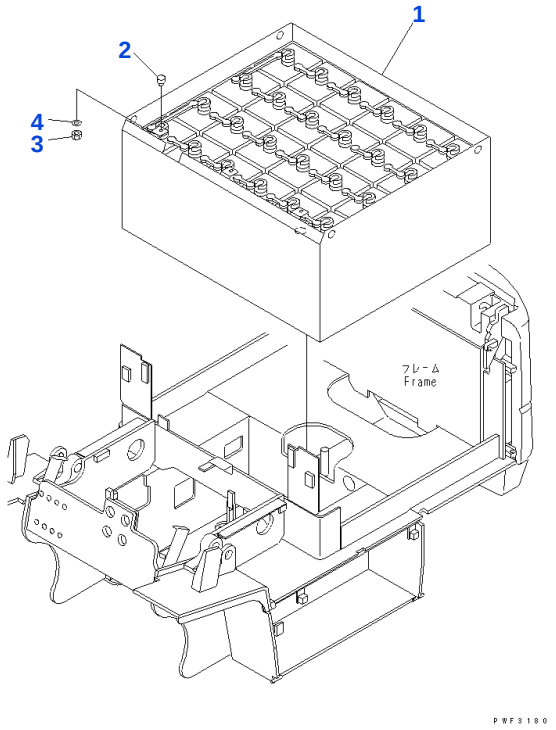


Reference: E4110-01A0

# 030010 Battery

| Item | Part No. | Part Name | Qty | Options |
|---|---|---|---|---|
| 1 | 37B-2E8-1010 | BATTERY ASSEMBLY, (GS YUASA 48V-450AH) | 1 | SN: 814647-UP |
| | 37B-2E6-4010 | ☐ BATTERY ASSEMBLY, (GS YUASA 48V-450AH) | 1 | SN: 814001-814646 |
| | 37B-2E8-1020 | BATTERY ASSEMBLY, (GS YUASA 48V-565AH) | 1 | SN: 814647-UP |
| | 37B-2E6-4020 | ☐ BATTERY ASSEMBLY, (GS YUASA 48V-565AH) | 1 | SN: 814001-814646 |
| | 37B-2E8-1030 | BATTERY ASSEMBLY, (GS YUASA 48V-600AH) | 1 | SN: 814647-UP |
| | 37B-2E6-4030 | ☐ BATTERY ASSEMBLY, (GS YUASA 48V-600AH) | 1 | SN: 814001-814646 |
| | 37B-2E8-1040 | BATTERY ASSEMBLY, (GS YUASA 48V-700AH) | 1 | SN: 814647-UP |
| | 37B-2E6-4040 | ☐ BATTERY ASSEMBLY, (GS YUASA 48V-700AH) | 1 | SN: 814001-814646 |
| | 37B-2E8-3020 | BATTERY ASSEMBLY, (GS YUASA 48V-935AH) (EXG) | 1 | SN: 814878-UP |
| | 37B-2E6-6020 | ☐ BATTERY ASSEMBLY, (GS YUASA 48V-935AH) (EXG) | 1 | SN: 814001-814877 |
| | 37B-2E8-3030 | BATTERY ASSEMBLY, (GS YUASA 48V-1080AH) (EXG) | 1 | SN: 814878-UP |
| | 37B-2E6-6030 | ☐ BATTERY ASSEMBLY, (GS YUASA 48V-1080AH) (EXG) | 1 | SN: 814001-814877 |
| | 34A-07-12130 | • PLUG | 1 | SN: 814001-UP |
| | 34A-57-27210 | • PLUG, (EXG) | 1 | SN: 814001-UP |
| | 3BB-05-56111 | • CASE, (FOR 450AH/565AH/600AH) | 1 | SN: 816498-UP |
| | 3BB-05-56110 | • ☐ CASE, (FOR 450AH/565AH/600AH) | 1 | SN: 814001-816497 |
| | 3BB-05-56121 | • CASE, (FOR 700AH) | 1 | SN: 816498-UP |
| | 3BB-05-56120 | • ☐ CASE, (FOR 700AH) | 1 | SN: 814001-816497 |
| | 3BB-05-56511 | • CASE, (FOR 935AH/1080AH) (EXG) | 1 | SN: 816498-UP |
| | 3BB-05-56510 | • ☐ CASE, (FOR 935AH/1080AH) (EXG) | 1 | SN: 814001-816497 |
| 2 | 3EB-50-31130 | CUSHION | 3 | SN: 814001-UP |
| 3 | 01580-10806 | NAT | 3 | SN: 814001-UP |
| 4 | 01640-20816 | WASHER | 3 | SN: 814001-UP |

**Catalog signs:** ☐ part above may be used instead

Reference: E4110-01A0

Open this exact parts catalogue on K-Part

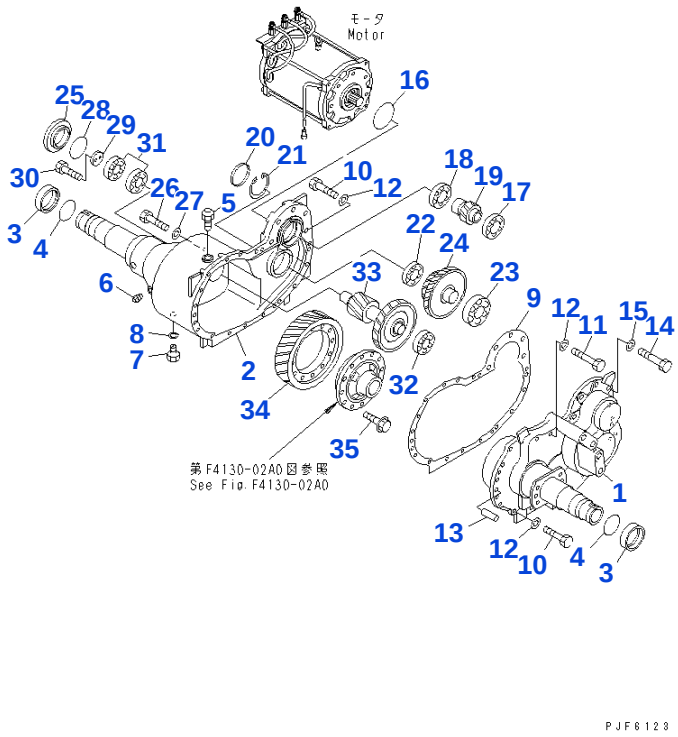


Reference: F4130-01A0

# 060010 POWER TRAIN (CASE)

| Item | Part No. | Part Name | Qty | Options |
|---|---|---|---|---|
| 1 | 3BB-21-46110 | CASE ASSEMBLY | 1 | SN: 814001-UP |
| | 3BB-21-47110 | CASE ASSEMBLY, (COLD) | 1 | SN: 814001-UP |
| 2 | 3BB-21-46140 | CASE ASSEMBLY | 1 | SN: 814001-UP |
| | 3BB-21-47140 | CASE ASSEMBLY, (COLD) | 1 | SN: 814001-UP |
| 3 | 3BB-21-31250 | RETAINER | 2 | SN: 814001-UP |
| 4 | 07000-02075 | O-RING | 2 | SN: 814001-UP |
| 5 | 3EB-21-15211 | CAP | 1 | SN: 814001-UP |
| 6 | 07042-20312 | PLUG | 1 | SN: 814001-UP |
| 7 | 34B-41-12910 | PLUG (KIT) | 1 | SN: 814001-UP |
| 8 | 34B-41-12920 | GASKET (KIT) | 1 | SN: 814001-UP |
| 9 | 3BB-21-46430 | GASKET (KIT) | 1 | SN: 814001-UP |
| 10 | 01010-81240 | BOLT | 12 | SN: 814001-UP |
| 11 | 01010-81280 | BOLT | 4 | SN: 814001-UP |
| 12 | 01643-51232 | WASHER | 16 | SN: 814001-UP |
| 13 | 04020-01228 | PIN, DOWEL | 2 | SN: 814001-UP |
| 14 | 01050-51480 | BOLT | 5 | SN: 814001-UP |
| 15 | 01643-31445 | WASHER | 5 | SN: 814001-UP |
| 16 | 07000-02090 | O-RING | 1 | SN: 814001-UP |
| 17 | 06000-06306 | BEARING | 1 | SN: 814001-UP |
| 18 | 06000-06009 | BEARING | 1 | SN: 814001-UP |
| 19 | 3BA-21-56510 | GEAR | 1 | SN: 814001-UP |
| 20 | 3SB-15-11350 | CAP | 1 | SN: 814001-UP |
| 21 | 04065-08025 | RING, SNAP | 1 | SN: 814001-UP |
| 22 | 3BB-21-31350 | BEARING | 1 | SN: 814001-UP |
| 23 | 06000-06309 | BEARING | 1 | SN: 814001-UP |
| 24 | 3BB-21-46330 | GEAR | 1 | SN: 814001-UP |
| 25 | 3BB-21-31410 | GAUGE | 1 | SN: 814001-UP |
| 26 | 01010-81240 | BOLT | 3 | SN: 814001-UP |
| 27 | 01643-51232 | WASHER | 3 | SN: 814001-UP |
| 28 | 07000-02080 | O-RING | 1 | SN: 814001-UP |
| 29 | 3EB-14-11220 | PLATE | 1 | SN: 814001-UP |
| 30 | 01010-80825 | BOLT | 2 | SN: 814001-UP |
| 31 | 3BB-21-31380 | BEARING | 2 | SN: 814001-UP |
| 32 | 3BB-22-36230 | BEARING | 1 | SN: 814001-UP |

Open this exact parts catalogue on K-Part

| Item | Part No. | Part Name | Qty | Options |
|---|---|---|---|---|
| 33 | 3BB-21-46340 | SHAFT ASSEMBLY | 1 | SN: 814001-UP |
| 34 | 3BB-21-31561 | GEAR | 1 | SN: 814001-UP |
| 35 | 3EB-21-11230 | BOLT | 12 | SN: 814001-UP |
| | | SERVICE KIT | | |
| KIT | 3BB-21-04021 | GASKET KIT | 1 | SN: 814001-UP |

Reference: F4130-01A0

Open this exact parts catalogue on K-Part

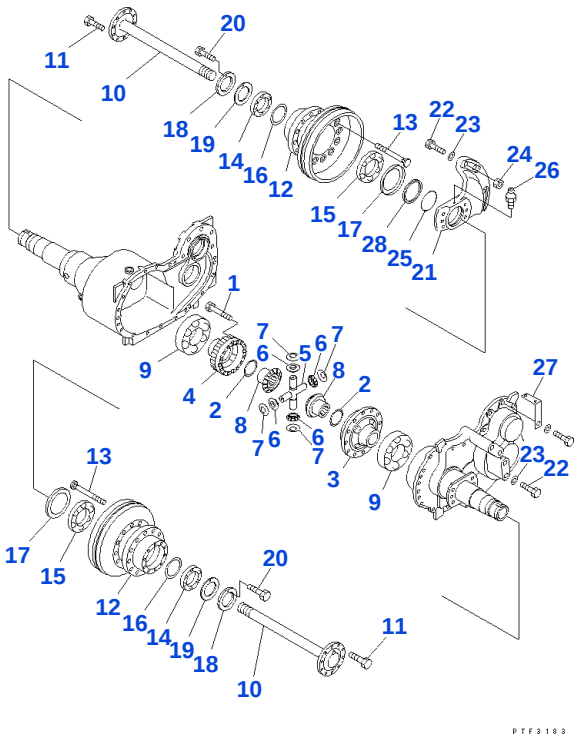


Reference: F4130-02A0

# 060020 POWER TRAIN (GEAR)

| Item | Part No. | Part Name | Qty | Options |
|---|---|---|---|---|
| | 3BB-21-41161 | DIFFERENTIAL SUB ASSEMBLY | 1 | SN: 814001-UP |
| 1 | 01010-81070 | • BOLT | 12 | SN: 814001-UP |
| 2 | 34B-21-12141 | • BUSH | 2 | SN: 814001-UP |
| 3 | 3BB-21-41171 | • CASE ASSEMBLY | 1 | SN: 814001-UP |
| 4 | 3BB-21-41181 | • CASE ASSEMBLY | 1 | SN: 814001-UP |
| 5 | 3EB-21-11160 | • SPIDER | 1 | SN: 814001-UP |
| 6 | 3EB-21-11341 | • GEAR | 4 | SN: 814001-UP |
| 7 | 3EB-21-11370 | • BUSH | 4 | SN: 814001-UP |
| 8 | 3EB-21-31141 | • GEAR | 2 | SN: 814001-UP |
| 9 | 06000-06315 | BEARING | 2 | SN: 814001-UP |
| 10 | 3BB-21-41191 | SHAFT | 2 | SN: 814001-UP |
| 11 | 3BB-21-41211 | BOLT | 20 | SN: 814001-UP |
| 12 | 3BB-21-31142 | HUB | 2 | SN: 814001-UP |
| | 3BB-21-31142UN | HUB, (COLD) | 2 | SN: 814001-UP |
| 13 | 3BB-21-31150 | BOLT | 22 | SN: 814001-UP |
| 14 | 3BB-21-31220 | BEARING | 2 | SN: 814001-UP |
| 15 | 316-22-21250 | BEARING | 2 | SN: 814001-UP |
| 16 | 3BB-21-31280 | SEAL (KIT) | 2 | SN: 814001-UP |
| 17 | 3EB-21-15130 | SEAL (KIT) | 2 | SN: 814001-UP |
| 18 | 3BB-21-31240 | NAT | 2 | SN: 814001-UP |
| 19 | 3BB-21-31230 | PLATE | 2 | SN: 814001-UP |
| 20 | 01010-80612 | BOLT | 2 | SN: 814001-UP |
| 21 | 3BB-21-41221 | SUPPORT, RIGHT | 1 | SN: 814001-UP |
| | 3BB-21-41221UN | SUPPORT, RIGHT (COLD) | 1 | SN: 814001-UP |
| 22 | 01010-81865 | BOLT | 8 | SN: 814001-UP |
| 23 | 01643-31845 | WASHER | 8 | SN: 814001-UP |
| 24 | 01580-11815 | NAT | 4 | SN: 814001-UP |
| 25 | 3BB-21-41290 | O-RING | 1 | SN: 814001-UP |
| 26 | 07020-00001 | FITTING, GREASE | 1 | SN: 814001-UP |
| 27 | 3BB-66-55330 | BRACKET | 1 | SN: 814001-UP |
| 28 | 3BB-21-41231 | COLLAR | 2 | SN: 814001-UP |
| | | SERVICE KIT | | |
| KIT | 3BB-21-04010 | SEAL KIT | 1 | SN: 814001-UP |

Open this exact parts catalogue on K-Part

Open this exact parts catalogue on K-Part

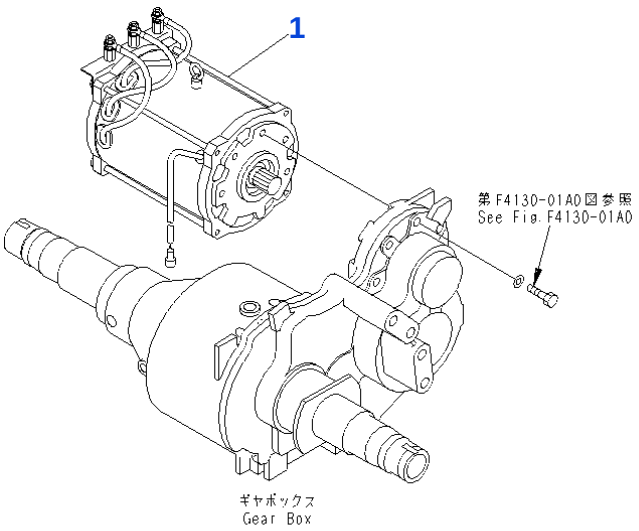


Reference: G4110-01A0

# 090010 TRACTION MOTOR

| Item | Part No. | Part Name | Qty | Options |
|---|---|---|---|---|
| 1 | 3BB-17-46111 | MOTOR ASSEMBLY | 1 | SN: 814001-UP |

Reference: G4110-01A0

Open this exact parts catalogue on K-Part

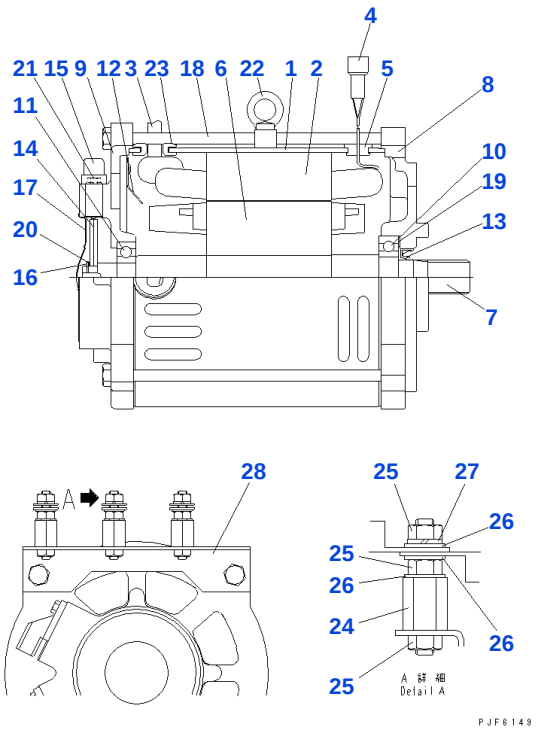


Reference: G4110-51A0

# 090020 TRACTION MOTOR (INNER PARTS)

| Item | Part No. | Part Name | Qty | Options |
|---|---|---|---|---|
| | 3BB-17-46111 | MOTOR ASSEMBLY | 1 | SN: 814001-UP |
| 1 | FBNABRE3135KMZ | • FRAME ASSEMBLY | 1 | SN: 814001-UP |
| 2 | | • • ☆ STATOR | 1 | SN: 814001-UP |
| 3 | | • • ☆ CABLE | 3 | SN: 814001-UP |
| 4 | | • • ☆ SENSOR | 1 | SN: 814001-UP |
| 5 | | • • ☆ GROMMET | 1 | SN: 814001-UP |
| 6 | FBDN-9464A | • ROTOR | 1 | SN: 814001-UP |
| 7 | | • • ☆ SHAFT | 1 | SN: 814001-UP |
| 8 | FBNBARE3110LCZ | • BRACKET, FRONT | 1 | SN: 814001-UP |
| 9 | FBNBARB3307LDR | • BRACKET, REAR | 1 | SN: 814001-UP |
| 10 | FB6207LLU | • BEARING | 1 | SN: 814001-UP |
| 11 | FB6305LLU | • BEARING | 1 | SN: 814001-UP |
| 12 | FBNBFRA4204KJZ | • GUIDE | 1 | SN: 814001-UP |
| 13 | FBSC-305011 | • SEAL, OIL | 1 | SN: 814001-UP |
| 14 | FBNPHRA4068HAZ | • GEAR, SENSOR | 2 | SN: 814001-UP |
| 15 | FBML-6619 | • SENSOR | 2 | SN: 814001-UP |
| 16 | FBJISB2804-S20 | • RING, SNAP | 1 | SN: 814001-UP |
| 17 | FBNBZRZ4243ZZZ | • COVER, SENSOR | 1 | SN: 814001-UP |
| 18 | FB1S10X300 | • BOLT | 4 | SN: 814001-UP |
| 19 | FBBWW-6306 | • WASHER | 1 | SN: 814001-UP |
| 20 | FBBWW-6001 | • WASHER | 2 | SN: 814001-UP |
| 21 | FBAPBTP-2-6X16 | • BOLT | 2 | SN: 814001-UP |
| 22 | FB4621-8 | • EYE BOLT | 1 | SN: 814001-UP |
| 23 | FBNGFRA4055P1Z | • GROMMET | 3 | SN: 814001-UP |
| 24 | FB1P-M8X43M-U | • TERMINAL | 3 | SN: 814001-UP |
| 25 | FB4211S-8 | • NAT | 9 | SN: 814001-UP |
| 26 | FB4242S-8 | • WASHER | 9 | SN: 814001-UP |
| 27 | FB4251S-8 | • WASHER | 3 | SN: 814001-UP |
| 28 | FBNGZRZ4265ZZD | • BRACKET | 1 | SN: 814001-UP |

**Catalog signs:** ☆ not supplied separately: assembly only

Reference: G4110-51A0

Open this exact parts catalogue on K-Part

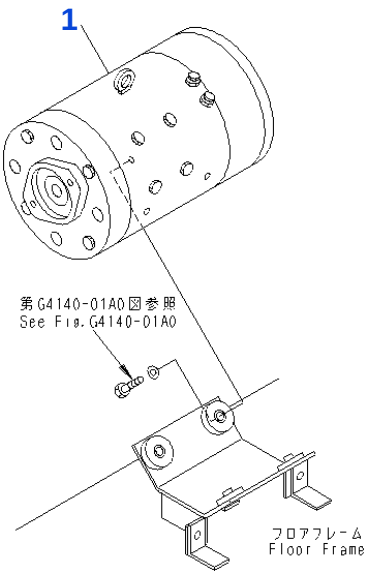


PTF3187

Reference: G4130-01A0

# 090030 PUMP MOTOR

| Item | Part No. | Part Name | Qty | Options |
|---|---|---|---|---|
| 1 | 3BB-18-56110 | PUMP MOTOR ASSEMBLY | 1 | SN: 814001-UP |

Reference: G4130-01A0

Open this exact parts catalogue on K-Part

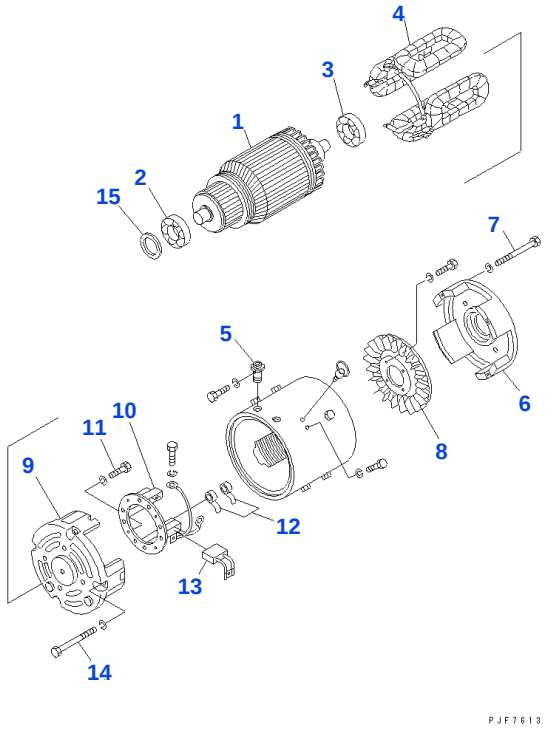


Reference: G4130-51A0

# 090040 PUMP MOTOR (INNER PARTS)

| Item | Part No. | Part Name | Qty | Options |
|---|---|---|---|---|
| | 3BB-18-56110 | PUMP MOTOR ASSEMBLY | 1 | SN: 814001-UP |
| 1 | FB0-51100-2320 | • ARMATURE ASSEMBLY | 1 | SN: 814001-UP |
| 2 | FB1-0454-63057 | • BEARING, BALL | 1 | SN: 814001-UP |
| 3 | FB1-0454-62067 | • BEARING | 1 | SN: 814001-UP |
| 4 | FB0-51230-2140 | • FIELD COIL ASSEMBLY | 1 | SN: 814001-UP |
| 5 | FB0-51787-0030 | • TERMINAL | 2 | SN: 814001-UP |
| 6 | FB0-51311-1901 | • FRONT BRACKET | 1 | SN: 814001-UP |
| 7 | FB0-0270-06552 | • BOLT | 4 | SN: 814001-UP |
| 8 | FB1-51420-0120 | • FAN ASSEMBLY | 1 | SN: 814001-UP |
| | FB0-51700-2190 | • REAR BRACKET ASSEMBLY | 1 | SN: 814001-UP |
| 9 | FB0-51711-1860 | • • REAR BRACKET | 1 | SN: 814001-UP |
| 10 | FB0-51730-0641 | • • HOLDER RING ASSEMBLY | 1 | SN: 814001-UP |
| 11 | FB0-09001-4950 | • • BOLT | 4 | SN: 814001-UP |
| 12 | FB0-51913-0330 | • SPRING, SPRING | 8 | SN: 814001-UP |
| 13 | FB0-51740-0841 | • BRUSH ASSEMBLY | 4 | SN: 814001-UP |
| 14 | FB0-0090-06102 | • BOLT | 4 | SN: 814001-UP |
| 15 | FB1-31921-0121 | • WASHER | 2 | SN: 814001-UP |

Reference: G4130-51A0

Open this exact parts catalogue on K-Part

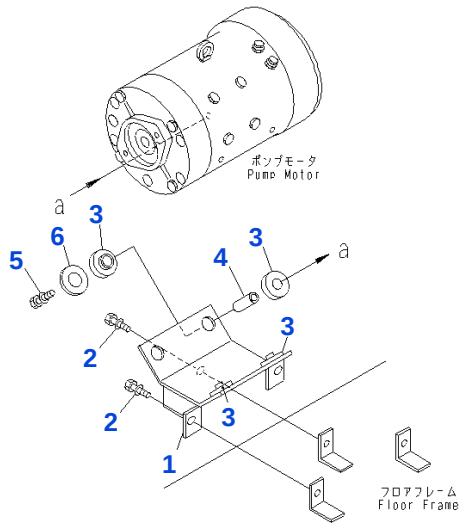


PJF7540

Reference: G4140-01A0

# 090050 PUMP MOTOR INSTALLATION PARTS

| Item | Part No. | Part Name | Qty | Options |
|---|---|---|---|---|
| 1 | 3BB-18-56510SG | BRACKET | 1 | SN: 814001-UP |
| 2 | 01010-81025 | BOLT | 3 | SN: 814001-UP |
| | 01643-31032 | WASHER | 3 | SN: 814001-UP |
| 3 | 3BB-18-21220 | CUSHION | 8 | SN: 814001-UP |
| 4 | 3BB-18-21231SG | PIPE | 4 | SN: 814001-UP |
| 5 | 01010-81045 | BOLT | 4 | SN: 814001-UP |
| | 01643-31032 | WASHER | 4 | SN: 814001-UP |
| 6 | 01643-31845 | WASHER | 4 | SN: 814001-UP |

Reference: G4140-01A0

Open this exact parts catalogue on K-Part

# Get the complete PDF catalogue

Komatsu FB20EXG-11 (JPN) Battery Forklift-Counter-Balance Type S/N 814001-899999 (Japanese)

**$89**

with PayPal | Store cart: $99

**Buy this PDF on Manuals Komatsu**

Check the model, serial range and language before payment.

Download instructions are emailed after payment confirmation.

This free sample contains 10 catalogue pages.