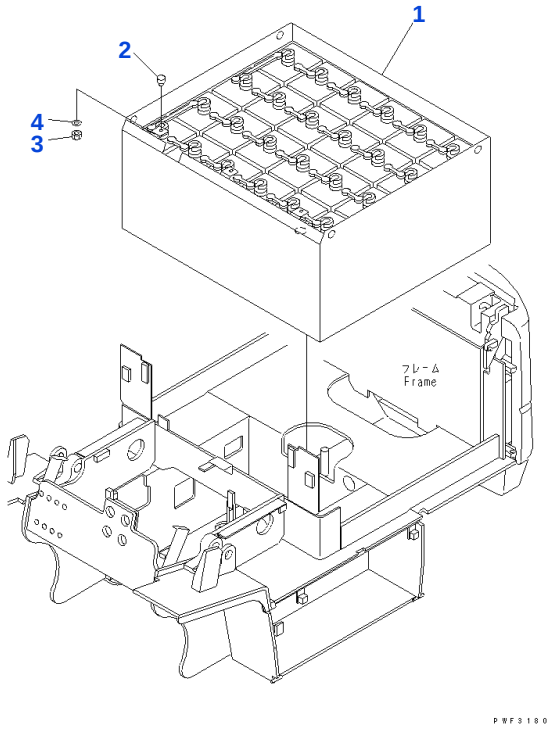

Reference: E4110-01A0

030010 Battery

Item	Part No.	Part Name	Qty	Options
1	37B-2E8-1010	BATTERY ASSEMBLY, (GS YUASA 48V-450AH)	1	SN: 814647-UP
	37B-2E6-4010	☐ BATTERY ASSEMBLY, (GS YUASA 48V-450AH)	1	SN: 814001-814646
	37B-2E8-1020	BATTERY ASSEMBLY, (GS YUASA 48V-565AH)	1	SN: 814647-UP
	37B-2E6-4020	☐ BATTERY ASSEMBLY, (GS YUASA 48V-565AH)	1	SN: 814001-814646
	37B-2E8-1030	BATTERY ASSEMBLY, (GS YUASA 48V-600AH)	1	SN: 814647-UP
	37B-2E6-4030	☐ BATTERY ASSEMBLY, (GS YUASA 48V-600AH)	1	SN: 814001-814646
	37B-2E8-1040	BATTERY ASSEMBLY, (GS YUASA 48V-700AH)	1	SN: 814647-UP
	37B-2E6-4040	☐ BATTERY ASSEMBLY, (GS YUASA 48V-700AH)	1	SN: 814001-814646
	37B-2E8-3020	BATTERY ASSEMBLY, (GS YUASA 48V-935AH) (EXG)	1	SN: 814878-UP
	37B-2E6-6020	☐ BATTERY ASSEMBLY, (GS YUASA 48V-935AH) (EXG)	1	SN: 814001-814877
	37B-2E8-3030	BATTERY ASSEMBLY, (GS YUASA 48V-1080AH) (EXG)	1	SN: 814878-UP
	37B-2E6-6030	☐ BATTERY ASSEMBLY, (GS YUASA 48V-1080AH) (EXG)	1	SN: 814001-814877
	34A-07-12130	• PLUG	1	SN: 814001-UP
	34A-57-27210	• PLUG, (EXG)	1	SN: 814001-UP
	3BB-05-56111	• CASE, (FOR 450AH/565AH/600AH)	1	SN: 816498-UP
	3BB-05-56110	• ☐ CASE, (FOR 450AH/565AH/600AH)	1	SN: 814001-816497
	3BB-05-56121	• CASE, (FOR 700AH)	1	SN: 816498-UP
	3BB-05-56120	• ☐ CASE, (FOR 700AH)	1	SN: 814001-816497
	3BB-05-56511	• CASE, (FOR 935AH/1080AH) (EXG)	1	SN: 816498-UP
	3BB-05-56510	• ☐ CASE, (FOR 935AH/1080AH) (EXG)	1	SN: 814001-816497
2	3EB-50-31130	CUSHION	3	SN: 814001-UP
3	01580-10806	NAT	3	SN: 814001-UP
4	01640-20816	WASHER	3	SN: 814001-UP

Catalog signs: ☐ part above may be used instead

Reference: E4110-01A0

Open this exact parts catalogue on K-Part

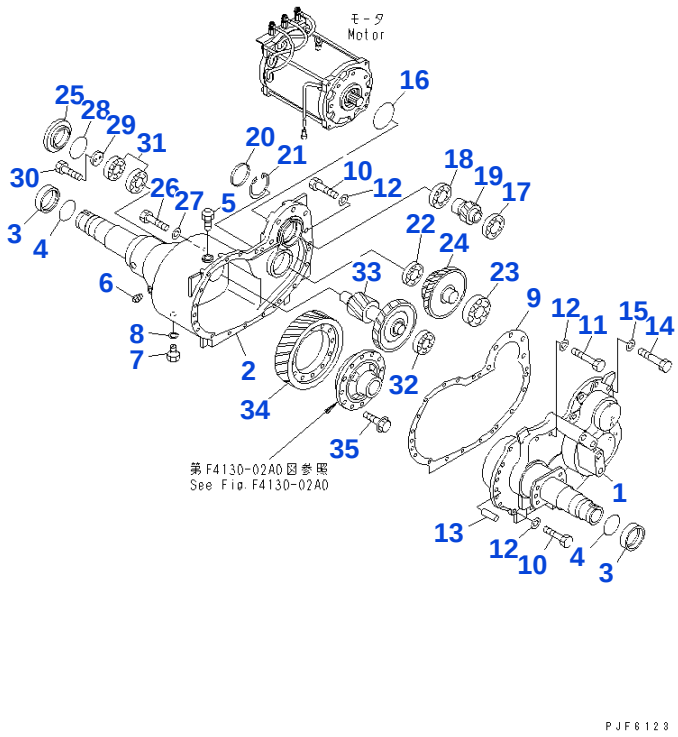

Reference: F4130-01A0

060010 POWER TRAIN (CASE)

Item	Part No.	Part Name	Qty	Options
1	3BB-21-46110	CASE ASSEMBLY	1	SN: 814001-UP
	3BB-21-47110	CASE ASSEMBLY, (COLD)	1	SN: 814001-UP
2	3BB-21-46140	CASE ASSEMBLY	1	SN: 814001-UP
	3BB-21-47140	CASE ASSEMBLY, (COLD)	1	SN: 814001-UP
3	3BB-21-31250	RETAINER	2	SN: 814001-UP
4	07000-02075	O RING	2	SN: 814001-UP
5	3EB-21-15211	CAP	1	SN: 814001-UP
6	07042-20312	PLUG	1	SN: 814001-UP
7	34B-41-12910	PLUG (KIT)	1	SN: 814001-UP
8	34B-41-12920	GASKET (KIT)	1	SN: 814001-UP
9	3BB-21-46430	GASKET (KIT)	1	SN: 814001-UP
10	01010-81240	BOLT	12	SN: 814001-UP
11	01010-81280	BOLT	4	SN: 814001-UP
12	01643-51232	WASHER	16	SN: 814001-UP
13	04020-01228	PIN, DOWEL	2	SN: 814001-UP
14	01050-51480	BOLT	5	SN: 814001-UP
15	01643-31445	WASHER	5	SN: 814001-UP
16	07000-02090	O RING	1	SN: 814001-UP
17	06000-06306	BEARING	1	SN: 814001-UP
18	06000-06009	BEARING	1	SN: 814001-UP
19	3BA-21-56510	GEAR	1	SN: 814001-UP
20	3SB-15-11350	CAP	1	SN: 814001-UP
21	04065-08025	RING, SNAP	1	SN: 814001-UP
22	3BB-21-31350	BEARING	1	SN: 814001-UP
23	06000-06309	BEARING	1	SN: 814001-UP
24	3BB-21-46330	GEAR	1	SN: 814001-UP
25	3BB-21-31410	GAUGE	1	SN: 814001-UP
26	01010-81240	BOLT	3	SN: 814001-UP
27	01643-51232	WASHER	3	SN: 814001-UP
28	07000-02080	O RING	1	SN: 814001-UP
29	3EB-14-11220	PLATE	1	SN: 814001-UP
30	01010-80825	BOLT	2	SN: 814001-UP
31	3BB-21-31380	BEARING	2	SN: 814001-UP
32	3BB-22-36230	BEARING	1	SN: 814001-UP

Item	Part No.	Part Name	Qty	Options
33	3BB-21-46340	SHAFT ASSEMBLY	1	SN: 814001-UP
34	3BB-21-31561	GEAR	1	SN: 814001-UP
35	3EB-21-11230	BOLT	12	SN: 814001-UP
		SERVICE KIT		
KIT	3BB-21-04021	GASKET KIT	1	SN: 814001-UP

Reference: F4130-01A0

Open this exact parts catalogue on K-Part

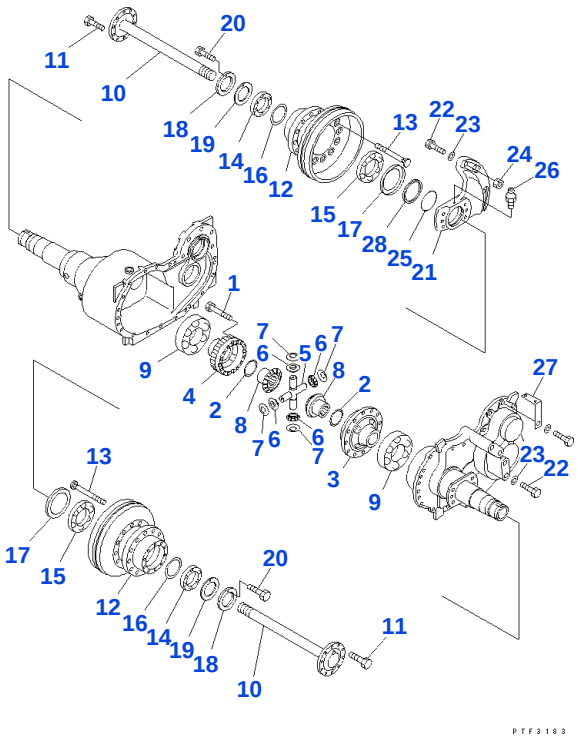

Reference: F4130-02A0

060020 POWER TRAIN (GEAR)

Item	Part No.	Part Name	Qty	Options
	3BB-21-41161	DIFFERENTIAL SUB ASSEMBLY	1	SN: 814001-UP
1	01010-81070	• BOLT	12	SN: 814001-UP
2	34B-21-12141	• BUSH	2	SN: 814001-UP
3	3BB-21-41171	• CASE ASSEMBLY	1	SN: 814001-UP
4	3BB-21-41181	• CASE ASSEMBLY	1	SN: 814001-UP
5	3EB-21-11160	• SPIDER	1	SN: 814001-UP
6	3EB-21-11341	• GEAR	4	SN: 814001-UP
7	3EB-21-11370	• BUSH	4	SN: 814001-UP
8	3EB-21-31141	• GEAR	2	SN: 814001-UP
9	06000-06315	BEARING	2	SN: 814001-UP
10	3BB-21-41191	SHAFT	2	SN: 814001-UP
11	3BB-21-41211	BOLT	20	SN: 814001-UP
12	3BB-21-31142	HUB	2	SN: 814001-UP
	3BB-21-31142UN	HUB, (COLD)	2	SN: 814001-UP
13	3BB-21-31150	BOLT	22	SN: 814001-UP
14	3BB-21-31220	BEARING	2	SN: 814001-UP
15	316-22-21250	BEARING	2	SN: 814001-UP
16	3BB-21-31280	SEAL (KIT)	2	SN: 814001-UP
17	3EB-21-15130	SEAL (KIT)	2	SN: 814001-UP
18	3BB-21-31240	NAT	2	SN: 814001-UP
19	3BB-21-31230	PLATE	2	SN: 814001-UP
20	01010-80612	BOLT	2	SN: 814001-UP
21	3BB-21-41221	SUPPORT, RIGHT	1	SN: 814001-UP
	3BB-21-41221UN	SUPPORT, RIGHT (COLD)	1	SN: 814001-UP
22	01010-81865	BOLT	8	SN: 814001-UP
23	01643-31845	WASHER	8	SN: 814001-UP
24	01580-11815	NAT	4	SN: 814001-UP
25	3BB-21-41290	O RING	1	SN: 814001-UP
26	07020-00001	FITTING, GREASE	1	SN: 814001-UP
27	3BB-66-55330	BRACKET	1	SN: 814001-UP
28	3BB-21-41231	COLLAR	2	SN: 814001-UP
		SERVICE KIT		
KIT	3BB-21-04010	SEAL KIT	1	SN: 814001-UP

Open this exact parts catalogue on K-Part

Open this exact parts catalogue on K-Part

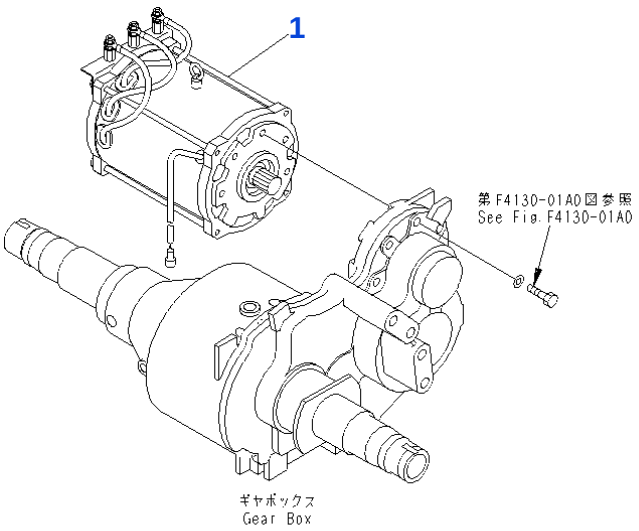

Reference: G4110-01A0

090010 TRACTION MOTOR

Item	Part No.	Part Name	Qty	Options
1	3BB-17-46111	MOTOR ASSEMBLY	1	SN: 814001-UP

Reference: G4110-01A0

Open this exact parts catalogue on K-Part

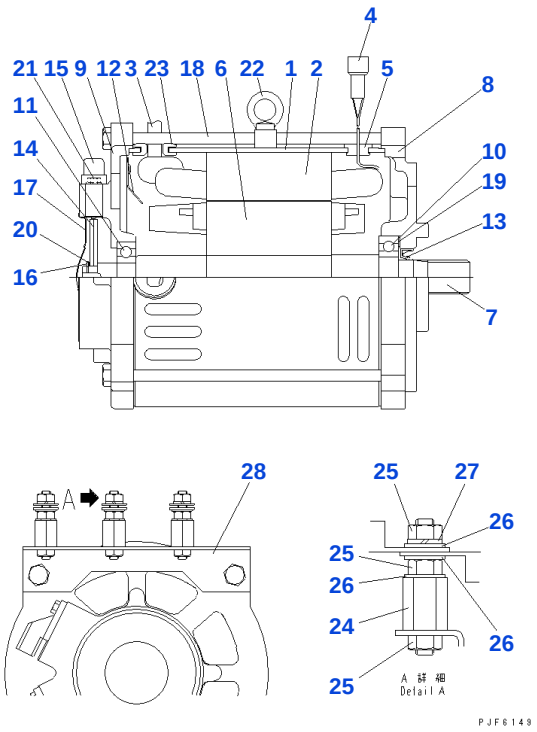

Reference: G4110-51A0

090020 TRACTION MOTOR (INNER PARTS)

Item	Part No.	Part Name	Qty	Options
	3BB-17-46111	MOTOR ASSEMBLY	1	SN: 814001-UP
1	FBNABRE3135KMZ	• FRAME ASSEMBLY	1	SN: 814001-UP
2		• • ☆ STATOR	1	SN: 814001-UP
3		• • ☆ CABLE	3	SN: 814001-UP
4		• • ☆ SENSOR	1	SN: 814001-UP
5		• • ☆ GROMMET	1	SN: 814001-UP
6	FBDN-9464A	• ROTOR	1	SN: 814001-UP
7		• • ☆ SHAFT	1	SN: 814001-UP
8	FBNBARE3110LCZ	• BRACKET,FRONT	1	SN: 814001-UP
9	FBNBARB3307LDR	• BRACKET, REAR	1	SN: 814001-UP
10	FB6207LLU	• BEARING	1	SN: 814001-UP
11	FB6305LLU	• BEARING	1	SN: 814001-UP
12	FBNBFRA4204KJZ	• GUIDE	1	SN: 814001-UP
13	FBSC-305011	• SEAL, OIL	1	SN: 814001-UP
14	FBNPHRA4068HAZ	• GEAR, SENSOR	2	SN: 814001-UP
15	FBML-6619	• SENSOR	2	SN: 814001-UP
16	FBJISB2804-S20	• RING, SNAP	1	SN: 814001-UP
17	FBNBZRZ4243ZZZ	• COVER, SENSOR	1	SN: 814001-UP
18	FB1S10X300	• BOLT	4	SN: 814001-UP
19	FBBWW-6306	• WASHER	1	SN: 814001-UP
20	FBBWW-6001	• WASHER	2	SN: 814001-UP
21	FBAPBTP-2-6X16	• BOLT	2	SN: 814001-UP
22	FB4621-8	• EYE BOLT	1	SN: 814001-UP
23	FBNGFRA4055P1Z	• GROMMET	3	SN: 814001-UP
24	FB1P-M8X43M-U	• TERMINAL	3	SN: 814001-UP
25	FB4211S-8	• NAT	9	SN: 814001-UP
26	FB4242S-8	• WASHER	9	SN: 814001-UP
27	FB4251S-8	• WASHER	3	SN: 814001-UP
28	FBNGZRZ4265ZZD	• BRACKET	1	SN: 814001-UP

Catalog signs: ☆ not supplied separately: assembly only

Reference: G4110-51A0

Open this exact parts catalogue on K-Part

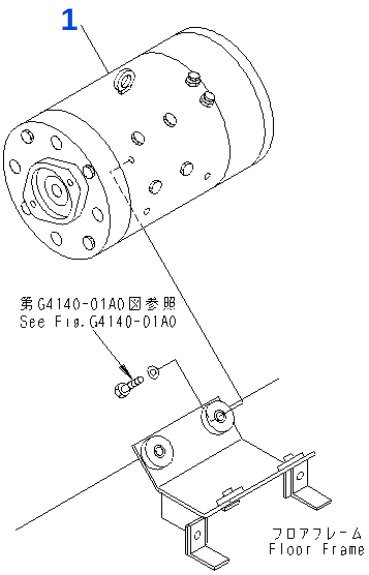

PTF3187

Reference: G4130-01A0

090030 PUMP MOTOR

Item	Part No.	Part Name	Qty	Options
1	3BB-18-56110	PUMP MOTOR ASSEMBLY	1	SN: 814001-UP

Reference: G4130-01A0

Open this exact parts catalogue on K-Part

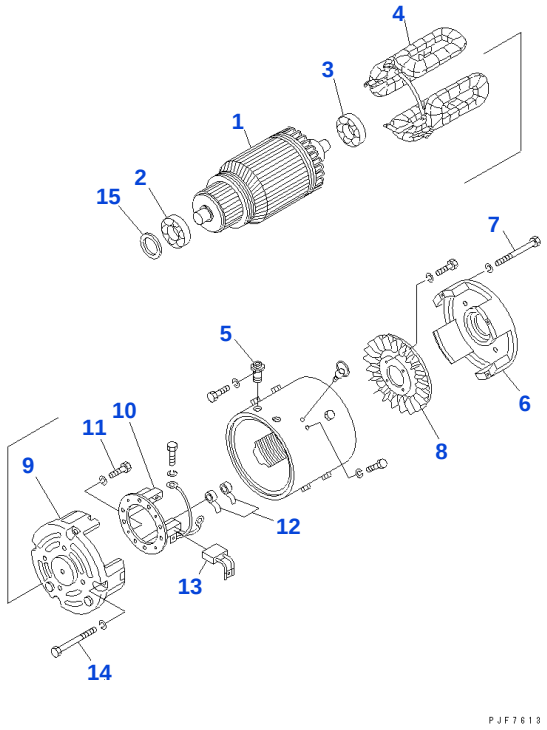

Reference: G4130-51A0

090040 PUMP MOTOR (INNER PARTS)

Item	Part No.	Part Name	Qty	Options
	3BB-18-56110	PUMP MOTOR ASSEMBLY	1	SN: 814001-UP
1	FB0-51100-2320	• ARMATURE ASSEMBLY	1	SN: 814001-UP
2	FB1-0454-63057	• BEARING, BALL	1	SN: 814001-UP
3	FB1-0454-62067	• BEARING	1	SN: 814001-UP
4	FB0-51230-2140	• FIELD COIL ASSEMBLY	1	SN: 814001-UP
5	FB0-51787-0030	• TERMINAL	2	SN: 814001-UP
6	FB0-51311-1901	• FRONT BRACKET	1	SN: 814001-UP
7	FB0-0270-06552	• BOLT	4	SN: 814001-UP
8	FB1-51420-0120	• FAN ASSEMBLY	1	SN: 814001-UP
	FB0-51700-2190	• REAR BRACKET ASSEMBLY	1	SN: 814001-UP
9	FB0-51711-1860	• • REAR BRACKET	1	SN: 814001-UP
10	FB0-51730-0641	• • HOLDER RING ASSEMBLY	1	SN: 814001-UP
11	FB0-09001-4950	• • BOLT	4	SN: 814001-UP
12	FB0-51913-0330	• SPRING, SPRING	8	SN: 814001-UP
13	FB0-51740-0841	• BRUSH ASSEMBLY	4	SN: 814001-UP
14	FB0-0090-06102	• BOLT	4	SN: 814001-UP
15	FB1-31921-0121	• WASHER	2	SN: 814001-UP

Reference: G4130-51A0

Open this exact parts catalogue on K-Part

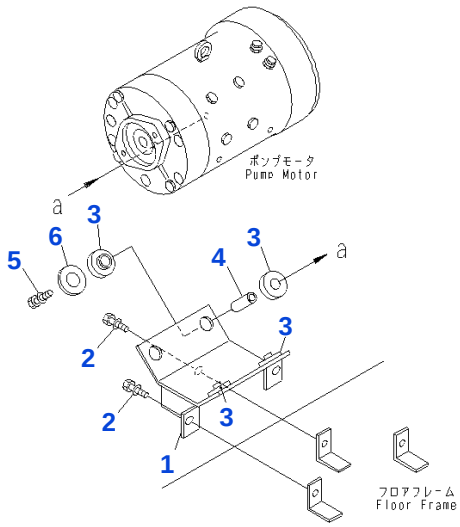

PJF7540

Reference: G4140-01A0

090050 PUMP MOTOR INSTALLATION PARTS

Item	Part No.	Part Name	Qty	Options
1	3BB-18-56510SG	BRACKET	1	SN: 814001-UP
2	01010-81025	BOLT	3	SN: 814001-UP
	01643-31032	WASHER	3	SN: 814001-UP
3	3BB-18-21220	CUSHION	8	SN: 814001-UP
4	3BB-18-21231SG	PIPE	4	SN: 814001-UP
5	01010-81045	BOLT	4	SN: 814001-UP
	01643-31032	WASHER	4	SN: 814001-UP
6	01643-31845	WASHER	4	SN: 814001-UP

Reference: G4140-01A0

Open this exact parts catalogue on K-Part

Get the complete PDF catalogue

Komatsu FB20EX-11 (JPN) Battery Forklift-Counter-Balance Type S/N 814001-899999 (Japanese)

$89

with PayPal | Store cart: $99

Buy this PDF on Manuals Komatsu

Check the model, serial range and language before payment.

Download instructions are emailed after payment confirmation.

This free sample contains 10 catalogue pages.