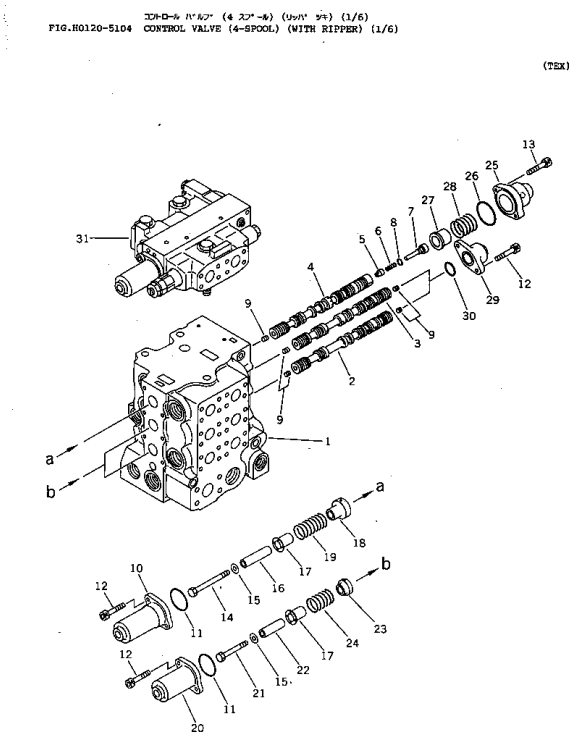

Reference: H0120-5104

030010 CONTROL VALVE (4 SPOOL) (WITH RIPPER) (1/6)

Item	Part No.	Part Name	Qty	Options
	723-64-21104	CONTROL VALVE	1	SN: 60516-UP
	723-64-21103	CONTROL VALVE	1	SN: 60271-60515
	723-64-21102	CONTROL VALVE	1	SN: 60001-60270
		CHANGED PARTS IN COLLAR ASSEMBLY FROM FIG.H0120-5104 TO FIG.H0120-5604.		
1		• ☆ BODY	1	SN: 60001-UP
2		• ☆ SPOOL	1	SN: 60001-UP
3		• ☆ SPOOL	1	SN: 60001-UP
4		• ☆ SPOOL	1	SN: 60271-UP
4		• ☆ SPOOL	1	SN: 60001-60270
5	723-63-31630	• VALVE	1	SN: 60001-UP
6	706-76-71130	• SPRING	1	SN: 60001-UP
7	723-63-31640	• PLUG	1	SN: 60001-UP
8	07002-11023	• O RING	1	SN: 60001-UP
9		• ☆ PLUG	5	SN: 60001-UP
10	723-63-31650	• CASE	1	SN: 60001-UP
11	07430-71380	• O RING	3	SN: 60001-UP
12	01252-30820	• BOLT	10	SN: 60001-UP
13	01252-30825	• BOLT	2	SN: 60001-UP
14	01010-31095	• BOLT	1	SN: 60001-UP
15	01643-31032	• WASHER	3	SN: 60001-UP
16	723-63-31660	• SPACER	1	SN: 60001-UP
17	723-63-31670	• RETAINER	3	SN: 60001-UP
18	723-63-31680	• RETAINER	1	SN: 60001-UP
19	723-63-31690	• SPRING	1	SN: 60001-UP
20	723-63-31710	• CASE	2	SN: 60001-UP
21	01010-31075	• BOLT	2	SN: 60001-UP
22	723-63-31720	• SPACER	2	SN: 60001-UP
23	723-63-31730	• RETAINER	2	SN: 60001-UP
24	723-63-31740	• SPRING	2	SN: 60001-UP
25	723-63-31750	• CASE	1	SN: 60001-UP
26	723-63-31760	• O RING	1	SN: 60001-UP
27	723-63-31770	• RETAINER	1	SN: 60001-UP
28	723-63-31780	• SPRING	1	SN: 60001-UP

Item	Part No.	Part Name	Qty	Options
29	723-63-31790	• CASE	2	SN: 60001-UP
30	100-30-15140	• O RING	2	SN: 60001-UP
31	723-61-06100	• VALVE ASSEMBLY	1	SN: 60001-UP

Catalog signs: ☆ not supplied separately: assembly only

Reference: H0120-5104

Open this exact parts catalogue on K-Part

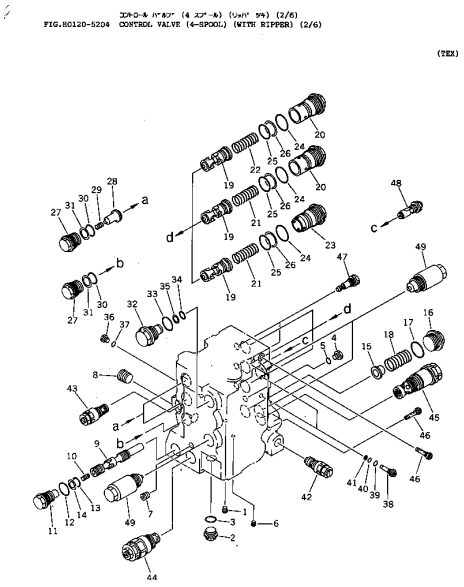

Reference: H0120-5204

030020 CONTROL VALVE (4 SPOOL) (WITH RIPPER) (2/6)

Item	Part No.	Part Name	Qty	Options
	723-64-21104	CONTROL VALVE	1	SN: 60516-UP
	723-64-21103	CONTROL VALVE	1	SN: 60271-60515
	723-64-21102	CONTROL VALVE	1	SN: 60001-60270
		CHANGED PARTS IN COLLAR ASSEMBLY FROM FIG.H0120-5104 TO FIG.H0120-5604.		
1		• ☆ PLUG	1	SN: 60001-UP
2	709-74-91860	• PLUG	1	SN: 60001-UP
3	07002-12434	• O RING	1	SN: 60001-UP
4	07040-11409	• PLUG	1	SN: 60001-UP
5	07002-11423	• O RING	1	SN: 60001-UP
6		• ☆ PLUG	14	SN: 60001-UP
7		• ☆ PLUG	2	SN: 60001-UP
8	07043-70617	• PLUG	1	SN: 60001-UP
9		• ☆ SPOOL	1	SN: 60001-UP
10		• ☆ PISTON	1	SN: 60001-60941
11	723-63-31530	• PLUG	1	SN: 60001-UP
12	07002-03034	• O RING	1	SN: 60001-UP
13	700-13-31161	• O RING	1	SN: 60001-UP
14	700-80-51190	• LINK	1	SN: 60001-UP
15	723-63-31540	• RETAINER	1	SN: 60001-UP
16	723-63-31550	• PLUG	1	SN: 60001-UP
17	07002-14234	• O RING	1	SN: 60001-UP
18	723-63-31560	• SPRING	1	SN: 60001-UP
19		• ☆ SPOOL	3	SN: 60001-UP
20	723-63-31820	• PLUG	2	SN: 60001-UP
21	723-63-31870	• SPRING	2	SN: 60001-UP
22	723-63-31840	• SPRING	1	SN: 60001-UP
23	723-63-31830	• PLUG	1	SN: 60001-UP
24	700-61-49160	• O RING	3	SN: 60001-UP
25	723-63-31850	• O RING	3	SN: 60001-UP
26	723-63-31860	• LINK	3	SN: 60001-UP
27	709-74-92821	• PLUG	3	SN: 60001-UP
28	709-94-92811	• VALVE	2	SN: 60001-UP
29	709-94-91751	• SPRING	2	SN: 60001-UP
30	700-93-11320	• O RING	3	SN: 60001-UP
31	700-93-11330	• LINK	3	SN: 60001-UP
32	723-63-31880	• PLUG	1	SN: 60001-UP
33	07002-03634	• O RING	1	SN: 60001-UP
34	07000-12018	• O RING	1	SN: 60001-UP
35	07001-02018	• LINK	1	SN: 60001-UP
36	07040-11007	• PLUG	2	SN: 60001-UP
37	07002-11023	• O RING	2	SN: 60001-UP
38	723-63-31620	• PLUG	2	SN: 60001-UP
39	07002-11023	• O RING	2	SN: 60001-UP
40	07000-11005	• O RING	2	SN: 60001-UP
41	07001-01005	• RING, BACK UP	2	SN: 60001-UP
42	723-60-21102	• VALVE ASSEMBLY, RELIEF	1	SN: 60001-UP

Item	Part No.	Part Name	Qty	Options
43	723-60-22200	• VALVE ASSEMBLY, RELIEF	1	SN: 60001-UP
44	723-60-23100	• VALVE ASSEMBLY, SUCTION AND SAFETY	1	SN: 60001-UP
45	723-60-23200	• VALVE ASSEMBLY	1	SN: 60001-UP
46	723-60-23300	• VALVE ASSEMBLY	2	SN: 60001-UP
47	723-60-23400	• VALVE ASSEMBLY, CHECK	2	SN: 60001-UP
48	723-60-23501	• VALVE ASSEMBLY, CHECK	1	SN: 60001-UP
49	709-90-64100	• VALVE ASSEMBLY, SUCTION	3	SN: 60001-UP

Catalog signs: ☆ not supplied separately: assembly only

Reference: H0120-5204

Open this exact parts catalogue on K-Part

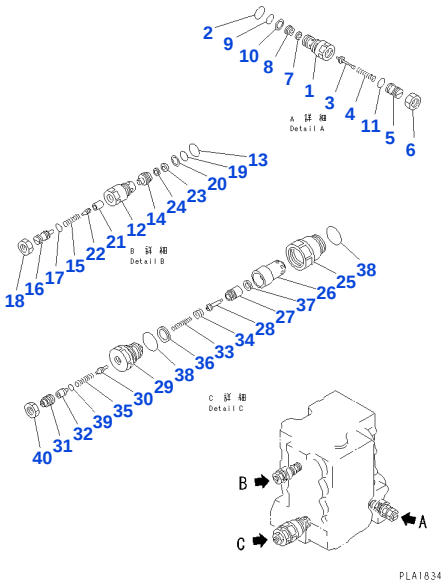

Reference: H0120-5304

030030 CONTROL VALVE (4 SPOOL) (WITH RIPPER) (3/6)

Item	Part No.	Part Name	Qty	Options
	723-64-21104	CONTROL VALVE	1	SN: 60516-UP
	723-64-21103	CONTROL VALVE	1	SN: 60271-60515
	723-64-21102	CONTROL VALVE	1	SN: 60001-60270
		CHANGED PARTS IN COLLAR ASSEMBLY FROM FIG.H0120-5104 TO FIG.H0120-5604.		
	723-60-21102	• VALVE ASSEMBLY, RELIEF	1	SN: 60001-UP
1		• • ☆ SLEEVE	1	SN: 60001-UP
2	07002-02434	• • O RING	1	SN: 60001-UP
3		• • ☆ POTATO	1	SN: 60001-UP
4		• • ☆ SPRING	1	SN: 60001-UP
5		• • ☆ SCREW	1	SN: 60001-UP
6		• • ☆ NAT	1	SN: 60001-UP
7		• • ☆ FILTER	1	SN: 60001-UP
8		• • ☆ PLUG	1	SN: 60001-UP
9	07000-12016	• • O RING	1	SN: 60001-UP
10	07001-02016	• • LINK	1	SN: 60001-UP
11		• • ☆ O RING	1	SN: 60001-UP
	723-60-22200	• VALVE ASSEMBLY, RELIEF	1	SN: 60001-UP
12		• • ☆ SLEEVE	1	SN: 60001-UP
13	07002-02434	• • O RING	1	SN: 60001-UP
14		• • ☆ SEAT	1	SN: 60001-UP
15		• • ☆ SPRING	1	SN: 60001-UP
16		• • ☆ SCREW	1	SN: 60001-UP
17		• • ☆ O RING	1	SN: 60001-UP
18		• • ☆ NAT	1	SN: 60001-UP
19	07000-22016	• • O RING	1	SN: 60001-UP
20	07001-02016	• • LINK	1	SN: 60001-UP
21		• • ☆ VALVE	1	SN: 60001-UP
22		• • ☆ PISTON	1	SN: 60001-UP
23		• • ☆ PLUG	1	SN: 60001-UP
24		• • ☆ FILTER	1	SN: 60001-UP
	723-60-23100	• VALVE ASSEMBLY, SUCTION AND SAFETY	1	SN: 60001-UP
25		• • ☆ SLEEVE	1	SN: 60001-UP
26		• • ☆ SLEEVE	1	SN: 60001-UP
27		• • ☆ POTATO	1	SN: 60001-UP
28		• • ☆ PISTON	1	SN: 60001-UP
29		• • ☆ PLUG	1	SN: 60001-UP
30		• • ☆ POTATO	1	SN: 60001-UP
31		• • ☆ SCREW	1	SN: 60001-UP
32		• • ☆ SPACER	1	SN: 60001-UP
33		• • ☆ SPRING	1	SN: 60001-UP
34		• • ☆ SPRING	1	SN: 60001-UP
35		• • ☆ SPRING	1	SN: 60001-UP
36		• • ☆ SEAL	1	SN: 60001-UP
37		• • ☆ SEAL	1	SN: 60001-UP

Open this exact parts catalogue on K-Part

Item	Part No.	Part Name	Qty	Options
38	07002-03634	• • O RING	2	SN: 60001-UP
39		• • ☆ O RING	1	SN: 60001-UP
40		• • ☆ NAT	1	SN: 60001-UP

Catalog signs: ☆ not supplied separately: assembly only

Reference: H0120-5304

Open this exact parts catalogue on K-Part

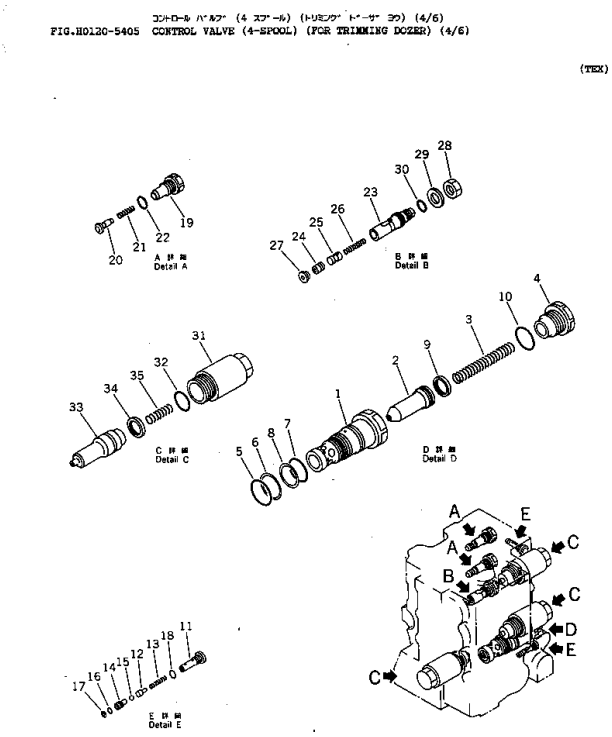

Reference: H0120-5404

030040 CONTROL VALVE (4 SPOOL) (WITH RIPPER) (4/6)

Item	Part No.	Part Name	Qty	Options
	723-64-21104	CONTROL VALVE	1	SN: 60516-UP
	723-64-21103	CONTROL VALVE	1	SN: 60271-60515
	723-64-21102	CONTROL VALVE	1	SN: 60001-60270
		CHANGED PARTS IN COLLAR ASSEMBLY FROM FIG.H0120-5104 TO FIG.H0120-5604.		
	723-60-23200	• VALVE ASSEMBLY	1	SN: 60001-UP
1		• • ☆ SLEEVE	1	SN: 60001-UP
2		• • ☆ VALVE	1	SN: 60001-UP
3		• • ☆ SPRING	1	SN: 60001-UP
4		• • ☆ PLUG	1	SN: 60001-UP
5	07000-13035	• • O RING	1	SN: 60001-UP
6	07001-03035	• • LINK	1	SN: 60001-UP
7	07000-13030	• • O RING	1	SN: 60001-UP
8	07001-03030	• • LINK	1	SN: 60001-UP
9		• • ☆ SEAL	1	SN: 60001-UP
10		• • ☆ O RING	1	SN: 60001-UP
	723-60-23300	• VALVE ASSEMBLY, CHECK	2	SN: 60001-UP
11		• • ☆ SLEEVE	1	SN: 60001-UP
12		• • ☆ RETAINER	1	SN: 60001-UP
13		• • ☆ SPRING	1	SN: 60001-UP
14		• • ☆ SEAT	1	SN: 60001-UP
15		• • ☆ BALL	1	SN: 60001-UP
16	07000-11005	• • O RING	1	SN: 60001-UP
17	07001-01005	• • LINK	1	SN: 60001-UP
18	07002-11023	• • O RING	1	SN: 60001-UP
	723-60-23400	• VALVE ASSEMBLY, CHECK	2	SN: 60001-UP
19		• • ☆ SLEEVE	1	SN: 60001-UP
20		• • ☆ VALVE	1	SN: 60001-UP
21		• • ☆ SPRING	1	SN: 60001-UP
22	07002-11823	• • O RING	1	SN: 60001-UP
	723-60-23501	• VALVE ASSEMBLY, CHECK	1	SN: 60001-UP
23		• • ☆ SLEEVE	1	SN: 60001-UP
24		• • ☆ VALVE	1	SN: 60001-UP
25		• • ☆ VALVE	1	SN: 60001-UP

Item	Part No.	Part Name	Qty	Options
26		• • ☆ SPRING	1	SN: 60001-UP
27		• • ☆ PLUG	1	SN: 60001-UP
28		• • ☆ NAT	1	SN: 60001-UP
29		• • ☆ WASHER	1	SN: 60001-UP
30	07002-11823	• • O RING	1	SN: 60001-UP
	709-90-64100	• VALVE ASSEMBLY, SUCTION	3	SN: 60001-UP
31		• • ☆ SLEEVE	1	SN: 60001-UP
32	07002-03634	• • O RING	1	SN: 60001-UP
33		• • ☆ VALVE	1	SN: 60001-UP
34		• • ☆ SEAL	1	SN: 60001-UP
35		• • ☆ SPRING	1	SN: 60001-UP

Catalog signs: ☆ not supplied separately: assembly only

Reference: H0120-5404

Open this exact parts catalogue on K-Part

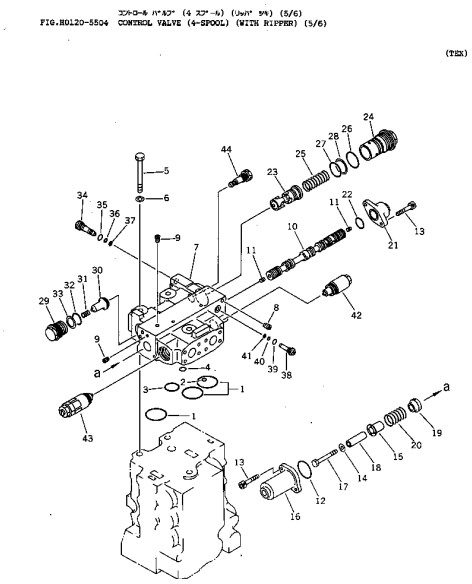

Reference: H0120-5504

030050 CONTROL VALVE (4 SPOOL) (WITH RIPPER) (5/6)

Item	Part No.	Part Name	Qty	Options
	723-64-21104	CONTROL VALVE	1	SN: 60516-UP
	723-64-21103	CONTROL VALVE	1	SN: 60271-60515
	723-64-21102	CONTROL VALVE	1	SN: 60001-60270
		CHANGED PARTS IN COLLAR ASSEMBLY FROM FIG.H0120-5104 TO FIG.H0120-5604.		
	723-61-06100	• VALVE ASSEMBLY	1	SN: 60001-UP
		THIS ASSEMBLY INCLUDES COMPONENTS FIG.H0120-5504 AND FIG.H0120-5604.		
1	07000-03048	• • O RING	3	SN: 60001-UP
2	07000-01009	• • O RING	1	SN: 60001-UP
3	07000-13030	• • O RING	1	SN: 60001-UP
4	07000-12012	• • O RING	1	SN: 60001-UP
5	01010-51485	• • BOLT	3	SN: 60001-UP
6	01643-31445	• • WASHER	3	SN: 60001-UP
	723-61-21100	• • VALVE ASSEMBLY	1	SN: 60001-UP
7		• • • ☆ BLOCK	1	SN: 60001-UP
8		• • • ☆ PLUG	4	SN: 60001-UP
9		• • • ☆ PLUG	4	SN: 60001-UP
10		• • • ☆ SPOOL	1	SN: 60001-UP
11		• • • ☆ PLUG	2	SN: 60001-UP
12	07430-71380	• • • O RING	1	SN: 60001-UP
13	01252-30820	• • • BOLT	4	SN: 60001-UP
14	01643-31032	• • • WASHER	1	SN: 60001-UP
15	723-63-31670	• • • RETAINER	1	SN: 60001-UP
16	723-63-31710	• • • CASE	1	SN: 60001-UP
17	01010-31075	• • • BOLT	1	SN: 60001-UP
18	723-63-31720	• • • SPACER	1	SN: 60001-UP
19	723-63-31730	• • • RETAINER	1	SN: 60001-UP
20	723-63-31740	• • • SPRING	1	SN: 60001-UP
21	723-63-31790	• • • CASE	1	SN: 60001-UP
22	100-30-15140	• • • O RING	1	SN: 60001-UP
23		• • • ☆ SPOOL	1	SN: 60001-UP
24	723-63-31820	• • • PLUG	1	SN: 60001-UP
25	723-63-31870	• • • SPRING	1	SN: 60001-UP
26	700-61-49160	• • • O RING	1	SN: 60001-UP
27	723-63-31850	• • • O RING	1	SN: 60001-UP
28	723-63-31860	• • • LINK	1	SN: 60001-UP
29	709-74-92821	• • • PLUG	1	SN: 60001-UP
30	709-94-92811	• • • VALVE	1	SN: 60001-UP
31	709-94-91751	• • • SPRING	1	SN: 60001-UP
32	700-93-11320	• • • O RING	1	SN: 60001-UP
33	700-93-11330	• • • LINK	1	SN: 60001-UP
34	723-63-31610	• • • PLUG	1	SN: 60001-UP
35	07002-11423	• • • O RING	1	SN: 60001-UP
36	07000-11007	• • • O RING	1	SN: 60001-UP
37	07001-01007	• • • LINK	1	SN: 60001-UP
38	723-63-31620	• • • PLUG	1	SN: 60001-UP

Item	Part No.	Part Name	Qty	Options
39	07002-11023	• • • O RING	1	SN: 60001-UP
40	07000-11005	• • • O RING	1	SN: 60001-UP
41	07001-01005	• • • LINK	1	SN: 60001-UP
42	709-20-81201	• • VALVE ASSEMBLY, SUCTION	1	SN: 60001-UP
43	709-70-74600	• • VALVE ASSEMBLY, SUCTION AND SAFETY	1	SN: 60001-UP
44	723-60-23400	• • VALVE ASSEMBLY, CHECK	1	SN: 60001-UP

Catalog signs: ☆ not supplied separately: assembly only

Reference: H0120-5504

Open this exact parts catalogue on K-Part

Get the complete PDF catalogue

Komatsu DRP060-4A (JPN) FOR DRP060-4A-EXD65EX-12 S/N 60001-60941 (Japanese)

$89

with PayPal | Store cart: $99

Buy this PDF on Manuals Komatsu

Check the model, serial range and language before payment.

Download instructions are emailed after payment confirmation.

This free sample contains 10 catalogue pages.