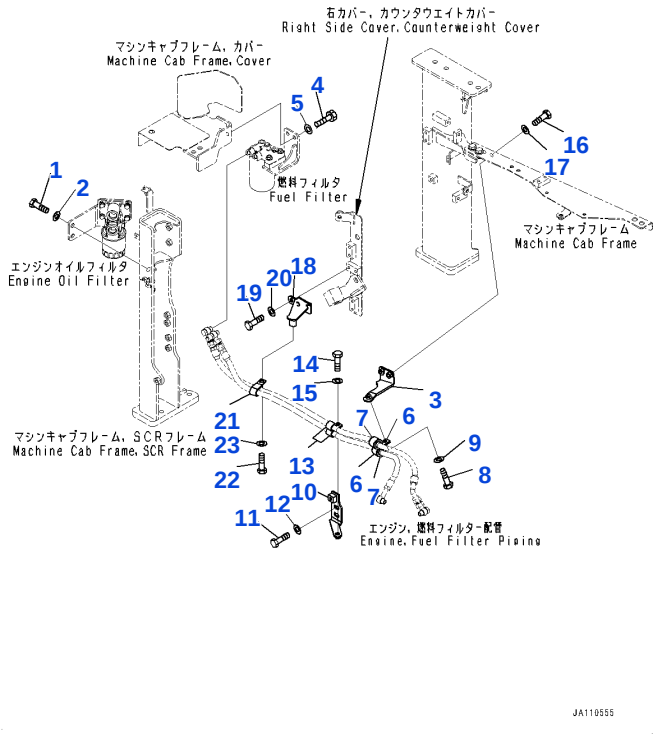

Reference: B0100-002001

B001001 Engine Mounting, Filter Remote Related Parts(#59832-65042)

Item	Part No.	Part Name	Qty	Options
1	01010-81235	Bolt	2	SN: 59832-@
2	01643-31232	Washer	2	SN: 59832-@
3	22B-01-41640	Bracket	1	SN: 59832-65042
4	01010-81030	Bolt	2	SN: 59832-@
5	01643-31032	Washer	2	SN: 59832-@
6	04434-52511	Clip	2	SN: 59832-@
7	07095-20318	Cushion	2	SN: 59832-@
8	01010-81025	Bolt	1	SN: 59832-@
9	01643-31032	Washer	1	SN: 59832-@
10	22B-01-41630	Bracket	1	SN: 59832-@
11	01010-81020	Bolt	2	SN: 59832-@
12	01643-31032	Washer	2	SN: 59832-@
13	04434-51910	Clip	2	SN: 59832-@
14	01010-81025	Bolt	1	SN: 59832-@
15	01643-31032	Washer	1	SN: 59832-@
16	01010-81025	Bolt	2	SN: 59832-@
17	01643-31032	Washer	2	SN: 59832-@
18	22B-01-41651	Bracket	1	SN: 59832-@
19	01010-81020	Bolt	2	SN: 59832-@
20	01643-31032	Washer	2	SN: 59832-@
21	04435-51910	Clip	1	SN: 59832-@
22	01010-81020	Bolt	1	SN: 59832-@
23	01643-31032	Washer	1	SN: 59832-@

Reference: B0100-002001

Open this exact parts catalogue on K-Part

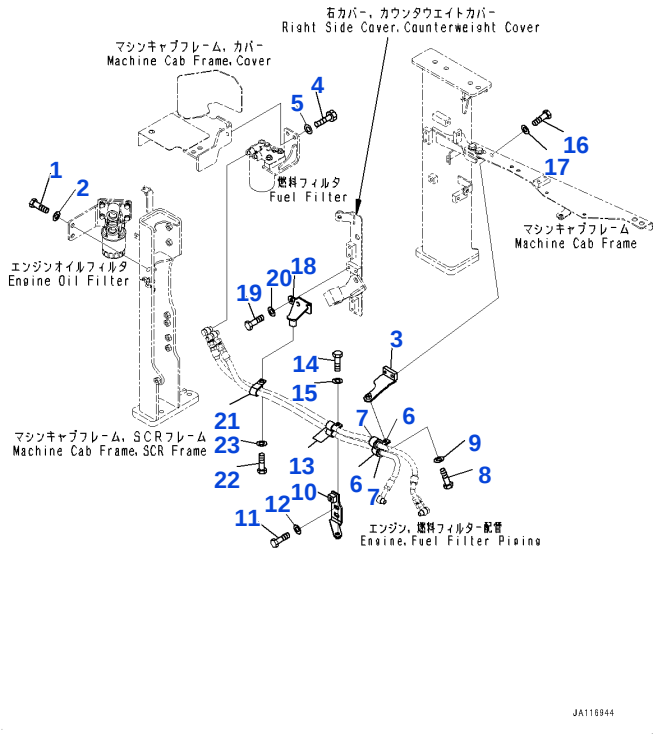

Reference: B0100-002001A

B001002 Engine Mounting, Filter Remote Related Parts(#65043-)

Item	Part No.	Part Name	Qty	Options
1	01010-81235	Bolt	2	SN: 59832-UP
2	01643-31232	Washer	2	SN: 59832-UP
3	22B-01-41641	Bracket	1	SN: 65043-UP
4	01010-81030	Bolt	2	SN: 59832-UP
5	01643-31032	Washer	2	SN: 59832-UP
6	04434-52511	Clip	2	SN: 59832-UP
7	07095-20318	Cushion	2	SN: 59832-UP
8	01010-81025	Bolt	1	SN: 59832-UP
9	01643-31032	Washer	1	SN: 59832-UP
10	22B-01-41630	Bracket	1	SN: 59832-UP
11	01010-81020	Bolt	2	SN: 59832-UP
12	01643-31032	Washer	2	SN: 59832-UP
13	04434-51910	Clip	2	SN: 59832-UP
14	01010-81025	Bolt	1	SN: 59832-UP
15	01643-31032	Washer	1	SN: 59832-UP
16	01010-81025	Bolt	2	SN: 59832-UP
17	01643-31032	Washer	2	SN: 59832-UP
18	22B-01-41651	Bracket	1	SN: 59832-UP
19	01010-81020	Bolt	2	SN: 59832-UP
20	01643-31032	Washer	2	SN: 59832-UP
21	04435-51910	Clip	1	SN: 59832-UP
22	01010-81020	Bolt	1	SN: 59832-UP
23	01643-31032	Washer	1	SN: 59832-UP

Reference: B0100-002001A

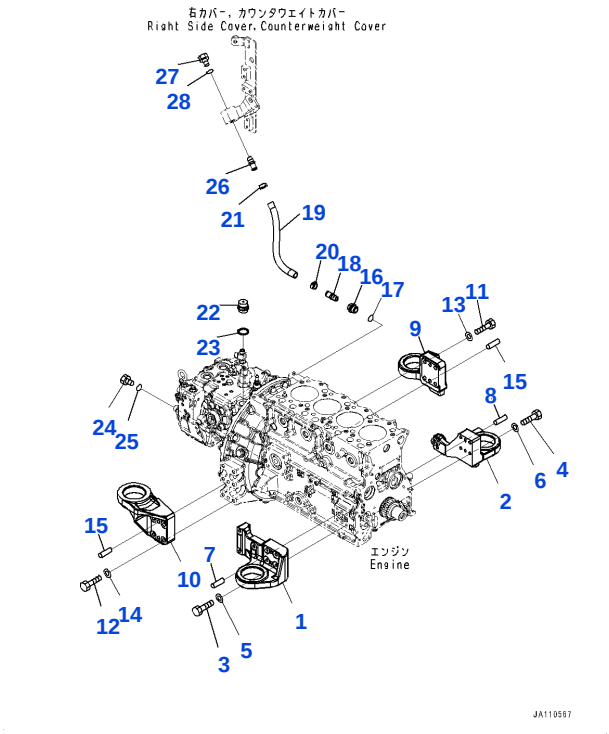

Reference: B0100-002002

B001003 Engine Mounting, Piping and Bracket(#59832-)

Item	Part No.	Part Name	Qty	Options
1	22B-01-31511	Bracket	1	SN: 59832-UP
2	22B-01-31521	Bracket	1	SN: 59832-UP
3	13Y-01-12470	Bolt	6	SN: 59832-UP
4	13Y-01-12470	Bolt	5	SN: 59832-UP
5	01643-31032	Washer	6	SN: 59832-UP
6	01643-31032	Washer	5	SN: 59832-UP
7	04020-01024	Pin, Dowel	2	SN: 59832-UP
8	04020-01024	Pin, Dowel	2	SN: 59832-UP
9	22B-01-31541	Bracket	1	SN: 59832-UP
10	22B-01-31531	Bracket	1	SN: 59832-UP
11	22B-01-11190	Bolt	4	SN: 59832-UP
12	22B-01-11190	Bolt	4	SN: 59832-UP
13	01643-31232	Washer	4	SN: 59832-UP
14	01643-31232	Washer	4	SN: 59832-UP
15	04020-01228	Pin, Dowel	4	SN: 59832-UP
16	21T-06-17940	Plug	1	SN: 59832-UP
17	07002-12434	O-ring	1	SN: 59832-UP
18	566-07-41540	Connector	1	SN: 59832-UP
19	07286-01633	Hose	1	SN: 59832-UP
20	07285-00200	Clip, Hose	1	SN: 59832-UP
21	07285-00200	Clip, Hose	1	SN: 59832-UP
22	07030-03034	Breather	1	SN: 59832-UP
23	07005-03016	Seal, Washer	1	SN: 59832-UP
24	07040-11209	Plug	1	SN: 59832-UP
25	07002-11223	O-ring	1	SN: 59832-UP
26	566-07-41540	Connector	1	SN: 59832-UP
27	07040-12412	Plug	1	SN: 59832-UP
28	07002-12434	O-ring	1	SN: 59832-UP

Reference: B0100-002002

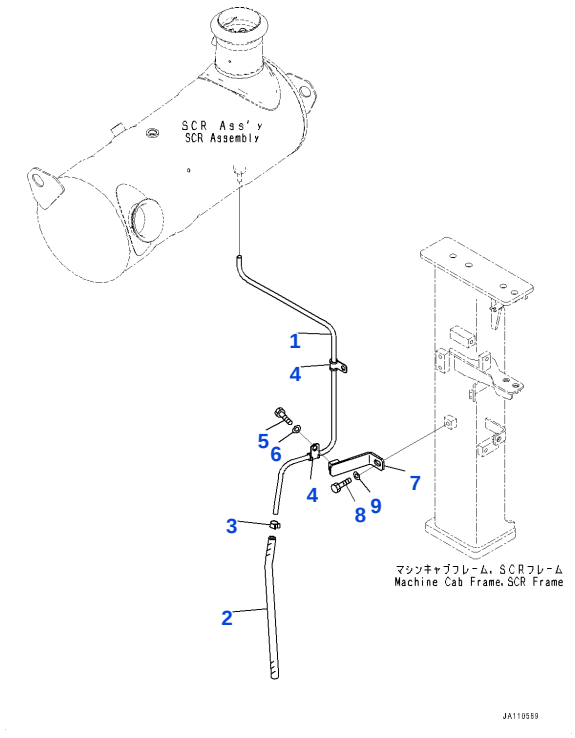

Reference: B0100-002003

B001004 Engine Mounting, SCR Drain Piping(#59832-)

Item	Part No.	Part Name	Qty	Options
1	22B-01-49211	Tube	1	SN: 59832-UP
2	22B-01-31870	Hose	1	SN: 59832-UP
3	07285-00150	Clip	1	SN: 59832-UP
4	600-052-3100	Clip	2	SN: 59832-UP
5	01010-81020	Bolt	2	SN: 59832-UP
6	01643-31032	Washer	2	SN: 59832-UP
7	22B-01-43160	Bracket	1	SN: 59832-UP
8	01010-81020	Bolt	1	SN: 59832-UP
9	01643-31032	Washer	1	SN: 59832-UP

Reference: B0100-002003

Open this exact parts catalogue on K-Part

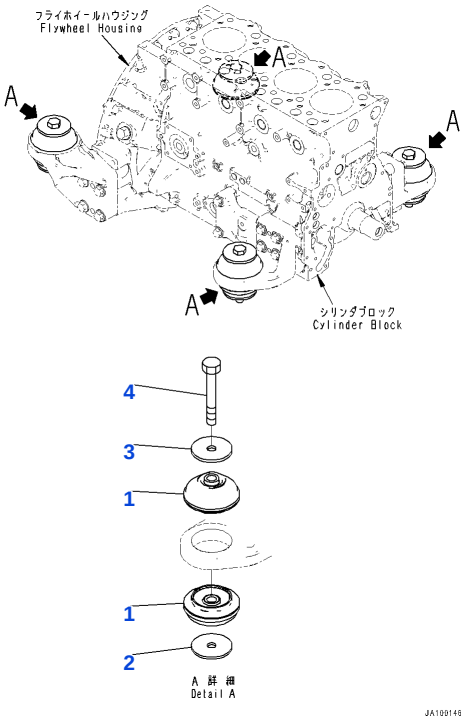

Reference: B0100-002004

B001005 Engine Mounting, Engine Mounting(#59832-)

Item	Part No.	Part Name	Qty	Options
1	22B-01-31551	Cushion	8	SN: 59832-UP
2	203-01-67540	Washer	4	SN: 59832-UP
3	113-01-21120	Washer	4	SN: 59832-UP
4	01011-81630	Bolt	4	SN: 59832-UP

Reference: B0100-002004

Open this exact parts catalogue on K-Part

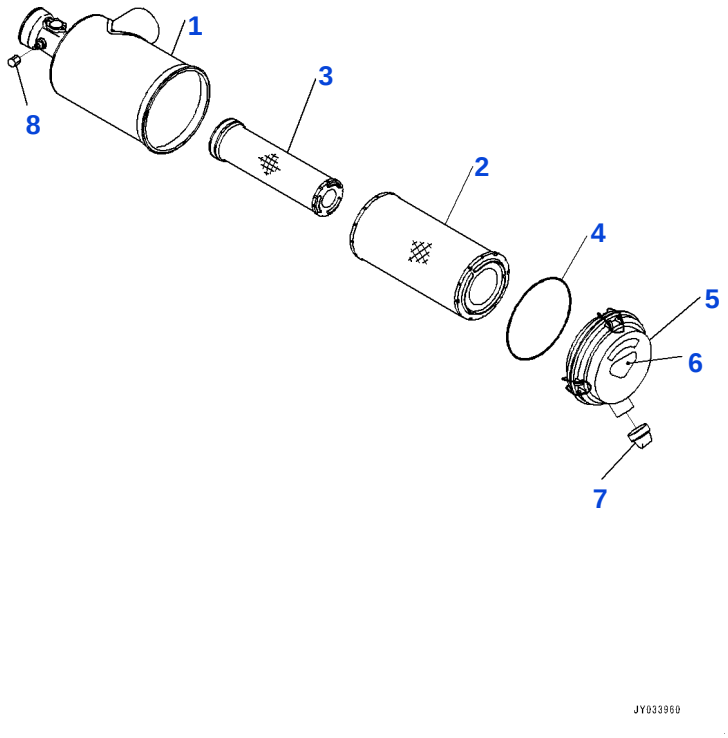

Reference: B0200-007001

B002001 Air Cleaner, Inner Parts, Air Cleaner(#67085-)

Item	Part No.	Part Name	Qty	Options
	6276-81-7100	Air Cleaner	1	SN: 67085-UP
1		• Body	1	SN: 67085-UP
	600-185-2500	• Element Assembly	1	SN: 67663-UP
2	600-185-2510	• • Element, Outer, Outer	1	SN: 67085-UP
3		• • Element, Inner, Inner	1	SN: 67663-UP
4	600-184-1280	• • O-ring	1	SN: 67085-UP
5	600-184-1330	• Cover Assembly	1	SN: 67085-UP
6	600-184-2810	• • Plate, Mark, Top	1	SN: 67663-UP
7	600-184-1350	• • Valve, Vacuator	1	SN: 67085-UP
8	561-02-12420	• Cap	1	SN: 67085-UP
		[C1]-This part cannot be supplied as an individual part. It is supplied as an assembly.		SN: UP

Reference: B0200-007001

Open this exact parts catalogue on K-Part

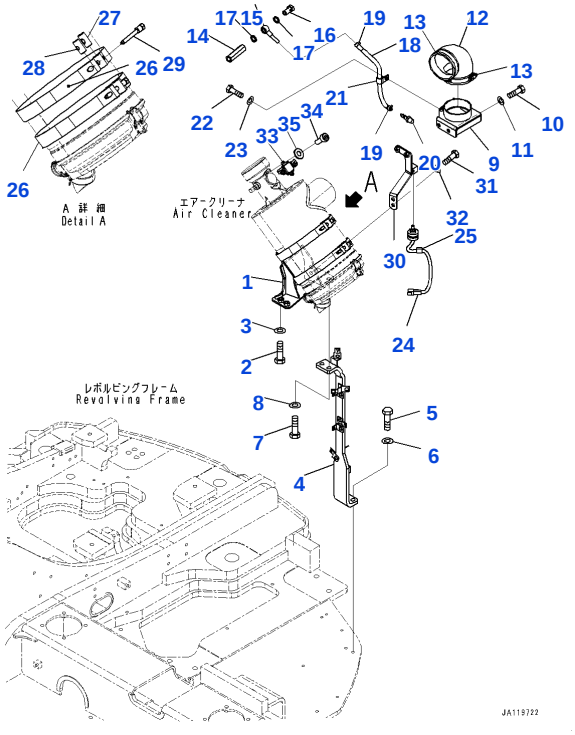

Reference: B0200-007002

B002002 Air Cleaner, Mounting and Piping(#50001-)

Item	Part No.	Part Name	Qty	Options
1	22B-01-41211	Bracket	1	SN: 50001-UP
2	01010-81230	Bolt	2	SN: 50001-UP
3	01643-31232	Washer	2	SN: 50001-UP
4	22B-01-49780	Frame	1	SN: 50001-UP
5	01010-81230	Bolt	2	SN: 50001-UP
6	01643-31232	Washer	2	SN: 50001-UP
7	01010-81235	Bolt	2	SN: 50001-UP
8	01643-31232	Washer	2	SN: 50001-UP
9	22B-01-41161	Bracket	1	SN: 50001-UP
10	01010-81025	Bolt	2	SN: 50001-UP
11	01643-31032	Washer	2	SN: 50001-UP
12	22B-01-41450	Hose	1	SN: 50001-UP
13	07289-00105	Clamp	2	SN: 50001-UP
14	22B-01-43310	Nipple	1	SN: 50001-UP
15	6206-71-1770	Joint	1	SN: 50001-UP
16	07206-30710	Bolt, Joint	1	SN: 50001-UP
17	07005-01012	Seal, Washer	2	SN: 50001-UP
18	22B-01-43320	Hose Assembly	1	SN: 50001-UP
19	07285-00125	Clip	2	SN: 50001-UP
20	6131-81-8820	Nipple	1	SN: 50001-UP
21	04434-51410	Clip	1	SN: 50001-UP
22	01010-81020	Bolt	1	SN: 50001-UP
23	01643-31032	Washer	1	SN: 50001-UP
24	7861-93-1430	Sensor, Dust Indicator	1	SN: 50001-UP
25	08211-00720	Clip	1	SN: 50001-UP
26	124-01-56910	Band	2	SN: 50001-UP
27	124-01-56920	Pin	2	SN: 50001-UP
28	124-01-56930	Pin	2	SN: 50001-UP
29	6110-23-6520	Bolt	2	SN: 50001-UP
30	22B-01-41272	Bracket	1	SN: 50001-UP
31	01010-81025	Bolt	2	SN: 50001-UP
32	01643-31032	Washer	2	SN: 50001-UP
33	6252-81-7800	Sensor, Airflow	1	SN: 50001-UP
34	01252-B0410	Bolt, Hexagon Socket Head	2	SN: 50001-UP

Open this exact parts catalogue on K-Part

Item	Part No.	Part Name	Qty	Options
35	01640-20408	Washer	2	SN: 50001-UP

Reference: B0200-007002

Open this exact parts catalogue on K-Part

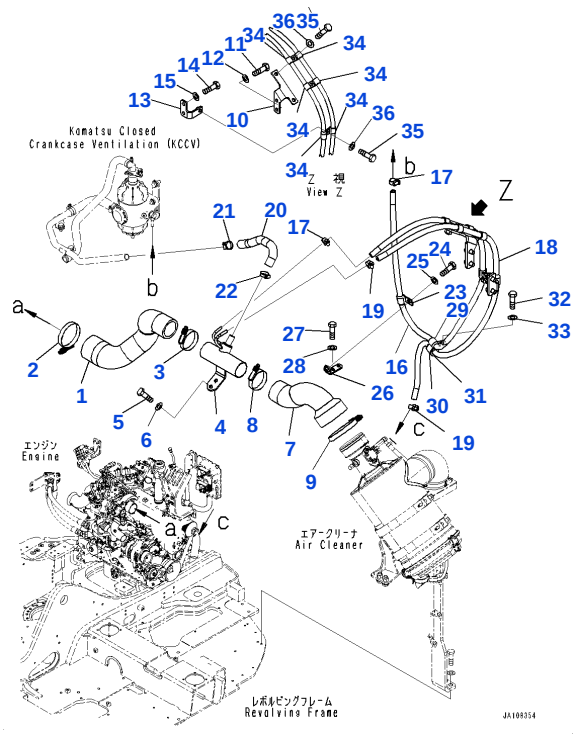

Reference: B0200-007003

B002003 Air Cleaner, Hose and Bracket(#50001-)

Item	Part No.	Part Name	Qty	Options
1	22B-01-41110	Hose	1	SN: 50001-UP
2	07299-00095	Clamp, Hose	1	SN: 50001-UP
3	07299-00080	Clamp, Hose	1	SN: 50001-UP
4	22B-01-41120	Tube	1	SN: 50001-UP
5	01010-81020	Bolt	2	SN: 50001-UP
6	01643-31032	Washer	2	SN: 50001-UP
7	22B-01-41290	Hose	1	SN: 50001-UP
8	07299-00080	Clamp, Hose	1	SN: 50001-UP
9	07299-00120	Clamp	1	SN: 50001-UP
10	22B-01-44230	Bracket	1	SN: 50001-UP
11	01010-81025	Bolt	2	SN: 50001-UP
12	01643-31032	Washer	2	SN: 50001-UP
13	22B-01-44240	Bracket	1	SN: 50001-UP
14	01010-81025	Bolt	2	SN: 50001-UP
15	01643-31032	Washer	2	SN: 50001-UP
16	22B-01-44210	Hose	1	SN: 50001-UP
17	07281-00167	Clamp	2	SN: 50001-UP
18	22B-01-44220	Hose	1	SN: 50001-UP
19	07281-00167	Clamp	2	SN: 50001-UP
20	22B-01-41751	Hose	1	SN: 50001-UP
21	22B-01-31260	Clamp	1	SN: 50001-UP
22	22B-01-31260	Clamp	1	SN: 50001-UP
23	04434-51410	Clip	1	SN: 50001-UP
24	01010-81025	Bolt	1	SN: 50001-UP
25	01643-31032	Washer	1	SN: 50001-UP
26	22B-01-31430	Bracket	1	SN: 50001-UP
27	01010-81020	Bolt	2	SN: 50001-UP
28	01643-31032	Washer	2	SN: 50001-UP
29	04434-51410	Clip	1	SN: 50001-UP
30	04434-51910	Clip	1	SN: 50001-UP
31	07095-40213	Cushion	1	SN: 50001-UP
32	01010-81025	Bolt	1	SN: 50001-UP
33	01643-31032	Washer	1	SN: 50001-UP
34	04434-51410	Clip	6	SN: 50001-UP

Open this exact parts catalogue on K-Part

Item	Part No.	Part Name	Qty	Options
35	01010-81025	Bolt	3	SN: 50001-UP
36	01643-31032	Washer	3	SN: 50001-UP

Reference: B0200-007003

Open this exact parts catalogue on K-Part

Get the complete PDF catalogue

Komatsu PC138US-11E0 S/N 70001-UP (E0 Turkey Standard Machine)

$89

with PayPal | Store cart: $99

Buy this PDF on Manuals Komatsu

Check the model, serial range and language before payment.

Download instructions are emailed after payment confirmation.

This free sample contains 10 catalogue pages.