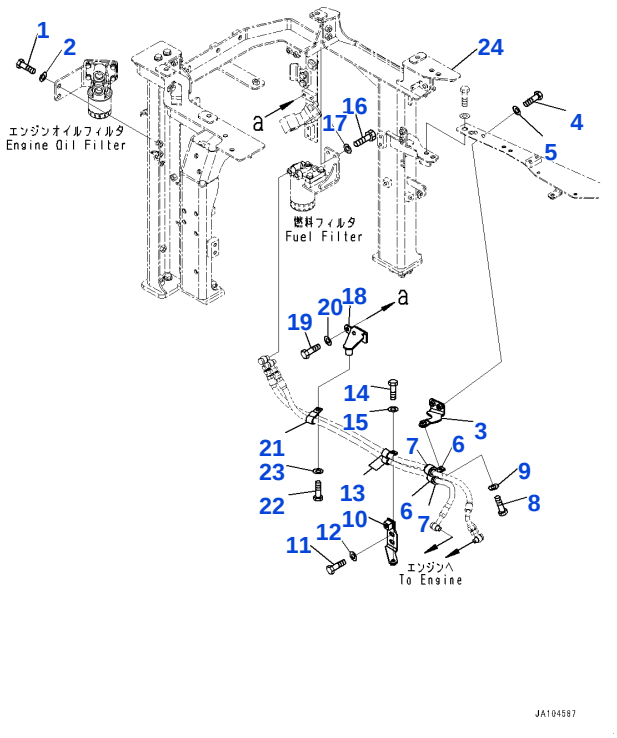

Reference: B0100-001001

B001001 Engine installation, filter remote related parts (#50001-56028)

Item	Part No.	Part Name	Qty	Options
1	01010-81230	BOLT	2	SN: 50001-@
2	01643-31232	WASHER	2	SN: 50001-@
3	22B-01-41640	BRACKET	1	SN: 50001-65042
	22B-01-31640	BRACKET	1	SN: 50001-56028
4	01010-81025	BOLT	2	SN: 50001-@
5	01643-31032	WASHER	2	SN: 50001-@
6	04434-52511	CLIP	2	SN: 50001-@
7	07095-20318	CUSHION	2	SN: 50001-@
8	01010-81025	BOLT	1	SN: 50001-@
9	01643-31032	WASHER	1	SN: 50001-@
10	22B-01-41630	BRACKET	1	SN: 50001-@
11	01010-81020	BOLT	2	SN: 50001-@
12	01643-31032	WASHER	2	SN: 50001-@
13	04434-51910	CLIP	2	SN: 50001-@
14	01010-81025	BOLT	1	SN: 50001-@
15	01643-31032	WASHER	1	SN: 50001-@
16	01010-81025	BOLT	2	SN: 50001-@
17	01643-31032	WASHER	2	SN: 50001-@
18	22B-01-41651	BRACKET	1	SN: 50001-@
19	01010-81020	BOLT	2	SN: 50001-@
20	01643-31032	WASHER	2	SN: 50001-@
21	04435-51910	CLIP	1	SN: 50001-@
22	01010-81020	BOLT	1	SN: 50001-@
23	01643-31032	WASHER	1	SN: 50001-@
		[B1] - INDICATES THE PART WHOSE SUPPLY HAS BEEN STOPPED. THE PARTS SHOWN IN THE ROW ABOVE WILL BE SUPPLIED IN PLACE OF THE PARTS WITH THIS SYMBOL.		SN: UP

Reference: B0100-001001

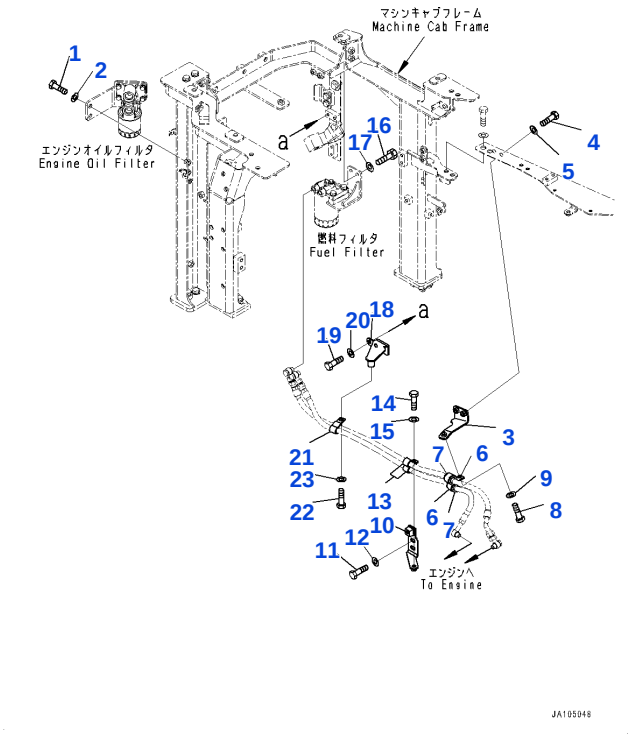

Reference: B0100-001001A

B001002 Engine installation, filter remote related parts (#56029-65042)

Item	Part No.	Part Name	Qty	Options
1	01010-81230	BOLT	2	SN: 50001-@
2	01643-31232	WASHER	2	SN: 50001-@
3	22B-01-41641	BRACKET	1	SN: 56029-@
	22B-01-41640	BRACKET	1	SN: 56029-65042
4	01010-81025	BOLT	2	SN: 50001-@
5	01643-31032	WASHER	2	SN: 50001-@
6	04434-52511	CLIP	2	SN: 50001-@
7	07095-20318	CUSHION	2	SN: 50001-@
8	01010-81025	BOLT	1	SN: 50001-@
9	01643-31032	WASHER	1	SN: 50001-@
10	22B-01-41630	BRACKET	1	SN: 50001-@
11	01010-81020	BOLT	2	SN: 50001-@
12	01643-31032	WASHER	2	SN: 50001-@
13	04434-51910	CLIP	2	SN: 50001-@
14	01010-81025	BOLT	1	SN: 50001-@
15	01643-31032	WASHER	1	SN: 50001-@
16	01010-81025	BOLT	2	SN: 50001-@
17	01643-31032	WASHER	2	SN: 50001-@
18	22B-01-41651	BRACKET	1	SN: 50001-@
19	01010-81020	BOLT	2	SN: 50001-@
20	01643-31032	WASHER	2	SN: 50001-@
21	04435-51910	CLIP	1	SN: 50001-@
22	01010-81020	BOLT	1	SN: 50001-@
23	01643-31032	WASHER	1	SN: 50001-@
		[B1] - INDICATES THE PART WHOSE SUPPLY HAS BEEN STOPPED. THE PARTS SHOWN IN THE ROW ABOVE WILL BE SUPPLIED IN PLACE OF THE PARTS WITH THIS SYMBOL.		SN: UP

Reference: B0100-001001A

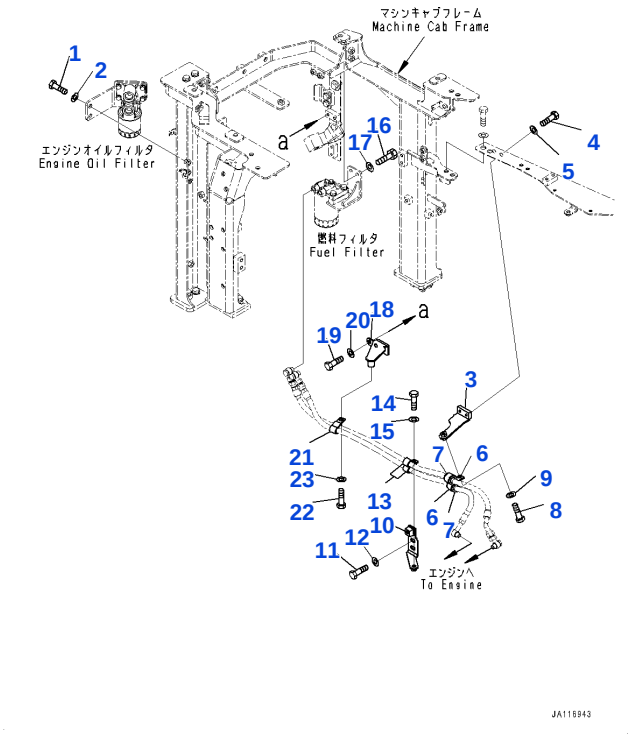

Reference: B0100-001001B

B001003 Engine installation, filter remote related parts (#65043-)

Item	Part No.	Part Name	Qty	Options
1	01010-81230	BOLT	2	SN: 50001-UP
2	01643-31232	WASHER	2	SN: 50001-UP
3	22B-01-41641	BRACKET	1	SN: 65043-UP
4	01010-81025	BOLT	2	SN: 50001-UP
5	01643-31032	WASHER	2	SN: 50001-UP
6	04434-52511	CLIP	2	SN: 50001-UP
7	07095-20318	CUSHION	2	SN: 50001-UP
8	01010-81025	BOLT	1	SN: 50001-UP
9	01643-31032	WASHER	1	SN: 50001-UP
10	22B-01-41630	BRACKET	1	SN: 50001-UP
11	01010-81020	BOLT	2	SN: 50001-UP
12	01643-31032	WASHER	2	SN: 50001-UP
13	04434-51910	CLIP	2	SN: 50001-UP
14	01010-81025	BOLT	1	SN: 50001-UP
15	01643-31032	WASHER	1	SN: 50001-UP
16	01010-81025	BOLT	2	SN: 50001-UP
17	01643-31032	WASHER	2	SN: 50001-UP
18	22B-01-41651	BRACKET	1	SN: 50001-UP
19	01010-81020	BOLT	2	SN: 50001-UP
20	01643-31032	WASHER	2	SN: 50001-UP
21	04435-51910	CLIP	1	SN: 50001-UP
22	01010-81020	BOLT	1	SN: 50001-UP
23	01643-31032	WASHER	1	SN: 50001-UP

Reference: B0100-001001B

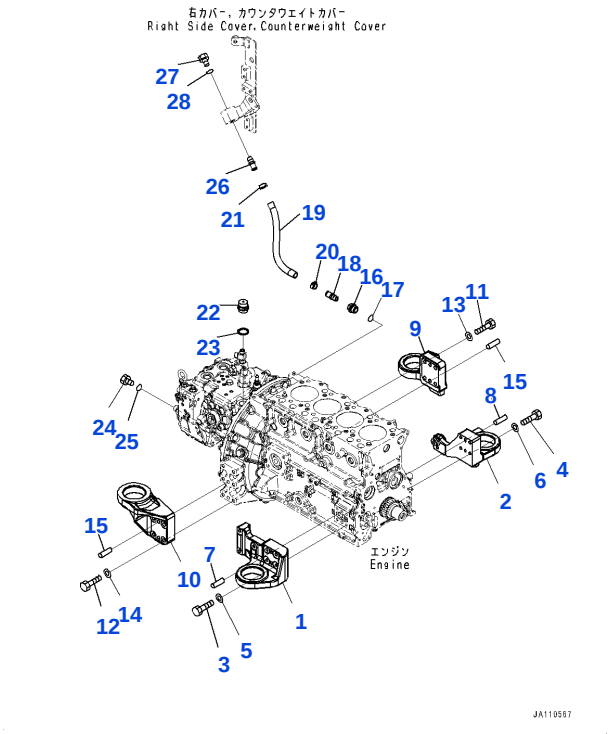

Reference: B0100-001002

B001004 Engine installation, piping/bracket (#50001-)

Item	Part No.	Part Name	Qty	Options
1	22B-01-31511	BRACKET	1	SN: 50001-UP
2	22B-01-31521	BRACKET	1	SN: 50001-UP
3	13Y-01-12470	BOLT	6	SN: 55102-UP
	22B-01-21190	BOLT	6	SN: 50001-55101
4	13Y-01-12470	BOLT	5	SN: 55102-UP
	22B-01-21190	BOLT	5	SN: 50001-55101
5	01643-31032	WASHER	6	SN: 50001-UP
6	01643-31032	WASHER	5	SN: 50001-UP
7	04020-01024	PIN, DOWEL	2	SN: 50001-UP
8	04020-01024	PIN, DOWEL	2	SN: 50001-UP
9	22B-01-31541	BRACKET	1	SN: 50001-UP
10	22B-01-31531	BRACKET	1	SN: 50001-UP
11	22B-01-11190	BOLT	4	SN: 50001-UP
12	22B-01-11190	BOLT	4	SN: 50001-UP
13	01643-31232	WASHER	4	SN: 50001-UP
14	01643-31232	WASHER	4	SN: 50001-UP
15	04020-01228	PIN, DOWEL	4	SN: 50001-UP
16	21T-06-17940	PLUG	1	SN: 50001-UP
17	07002-12434	O-RING	1	SN: 50001-UP
18	566-07-41540	CONNECTOR	1	SN: 50001-UP
19	07286-01633	HOSE	1	SN: 50001-UP
20	07285-00200	CLIP, HOSE	1	SN: 50001-UP
21	07285-00200	CLIP, HOSE	1	SN: 50001-UP
22	07030-03034	BREEZER	1	SN: 50001-UP
23	07005-03016	SEAL, WASHER	1	SN: 50001-UP
24	07040-11209	PLUG	1	SN: 50001-UP
25	07002-11223	O-RING	1	SN: 50001-UP
26	566-07-41540	CONNECTOR	1	SN: 50001-UP
27	07040-12412	PLUG	1	SN: 50001-UP
28	07002-12434	O-RING	1	SN: 50001-UP
		[A1] - PARTS MARKED WITH THIS SYMBOL AND THE PARTS LISTED ON THE LINE IMMEDIATELY ABOVE CAN BE USED IN PLACE OF EACH OTHER.		SN: UP

Open this exact parts catalogue on K-Part

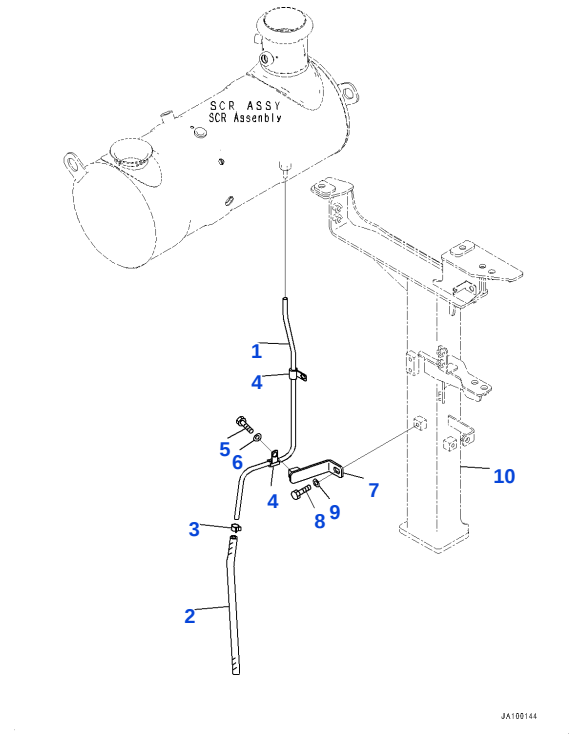

Reference: B0100-001003

B001005 Engine installation, SCR drain piping (#50001-)

Item	Part No.	Part Name	Qty	Options
1	22B-01-41860	TUBE	1	SN: 50001-UP
2	22B-01-31870	HOSE	1	SN: 50001-UP
3	07285-00150	CLIP	1	SN: 50001-UP
4	600-052-3100	CLIP	2	SN: 54265-UP
	6151-53-8280	CLIP	2	SN: 50001-54264
5	01010-81020	BOLT	2	SN: 50001-UP
6	01643-31032	WASHER	2	SN: 50001-UP
7	22B-01-43160	BRACKET	1	SN: 50001-UP
8	01010-81020	BOLT	1	SN: 50001-UP
9	01643-31032	WASHER	1	SN: 50001-UP
		[A2]-IN PLACE OF THE PARTS WITH THIS SYMBOL, YOU CAN USE THE PARTS LISTED ON THE LINE ABOVE IT.		SN: UP

Reference: B0100-001003

Open this exact parts catalogue on K-Part

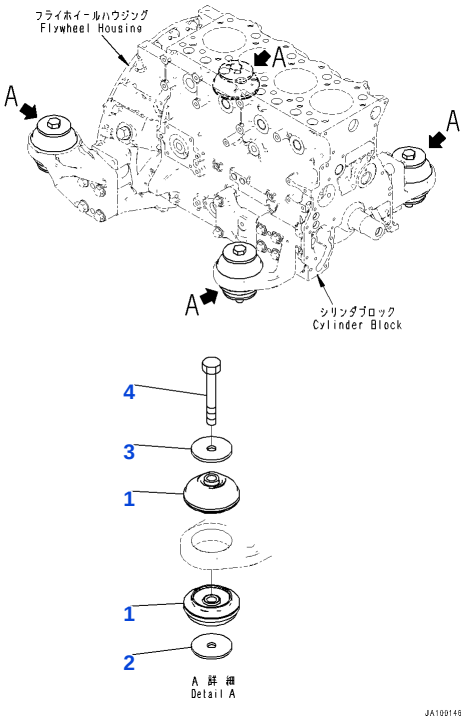

Reference: B0100-001004

B001006 Engine installation, Engine installation (#50001-)

Item	Part No.	Part Name	Qty	Options
1	22B-01-31551	CUSHION	8	SN: 50001-UP
2	203-01-67540	WASHER	4	SN: 50001-UP
3	113-01-21120	WASHER	4	SN: 50001-UP
4	01011-81630	BOLT	4	SN: 50001-UP

Reference: B0100-001004

Open this exact parts catalogue on K-Part

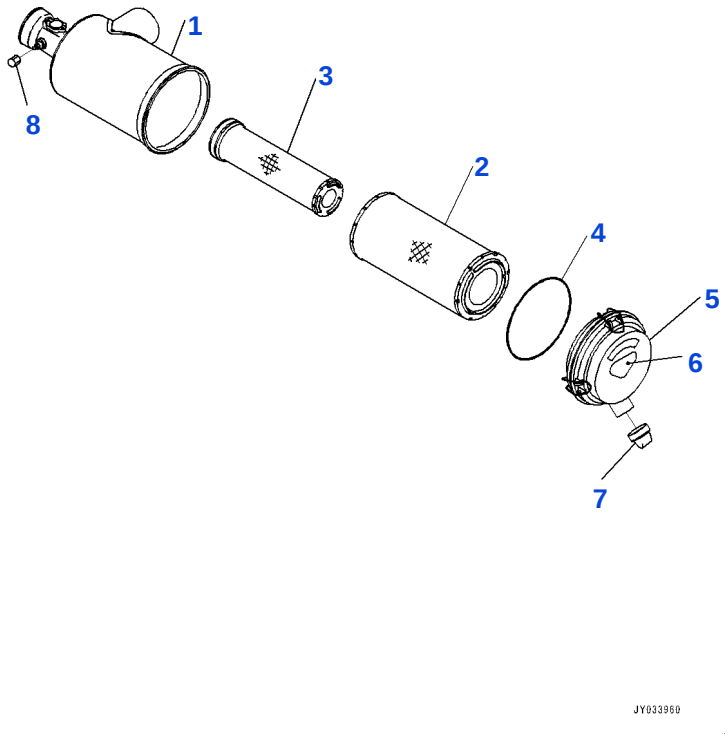

Reference: B0200-002001

B002001 Air cleaner, air cleaner components (#66861-)

Item	Part No.	Part Name	Qty	Options
	6276-81-7100	AIR CLEANER	1	SN: 66861-UP
1		• BODY	1	SN: 66861-UP
	600-185-2500	• ELEMENT ASSEMBLY	1	SN: 66861-UP
2	600-185-2510	• • ELEMENT, OUTER	1	SN: 66861-UP
3		• • ELEMENT, INNER	1	SN: 66861-UP
4	600-184-1280	• • O-RING	1	SN: 66861-UP
5	600-184-1330	• COVER ASSEMBLY	1	SN: 66861-UP
6	600-184-2810	• • PLATE, MARK, TOP	1	SN: 66861-UP
7	600-184-1350	• • VALVE, VACUATOR	1	SN: 66861-UP
8	561-02-12420	• CAP	1	SN: 66861-UP
		[C1] - PARTS WITH THIS SYMBOL CANNOT BE SUPPLIED SEPARATELY. SUPPLIED WITH ASSEMBLED PARTS.		SN: UP

Reference: B0200-002001

Open this exact parts catalogue on K-Part

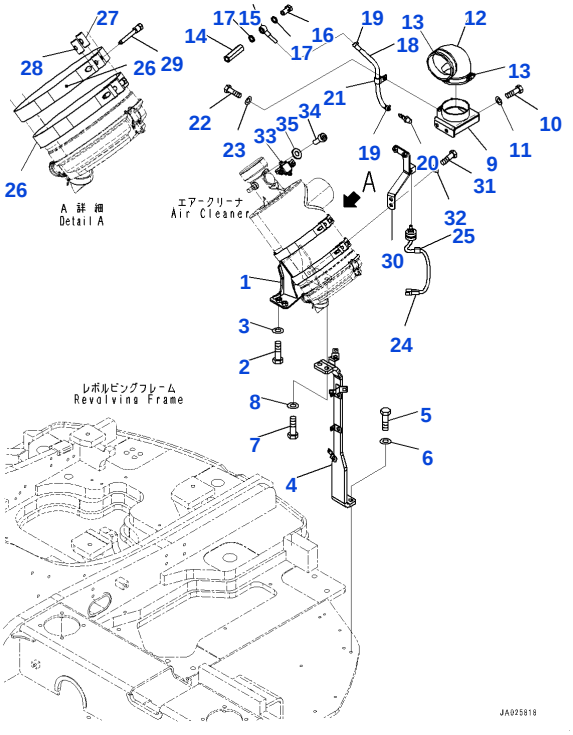

Reference: B0200-002002

B002002 AIR CLEANER, INSTALLATION AND PIPING(#66861-)

Item	Part No.	Part Name	Qty	Options
1	22B-01-41211	BRACKET	1	SN: 66861-UP
2	01010-81230	BOLT	2	SN: 66861-UP
3	01643-31232	WASHER	2	SN: 66861-UP
4	22B-01-49780	FRAME	1	SN: 66861-UP
5	01010-81230	BOLT	2	SN: 66861-UP
6	01643-31232	WASHER	2	SN: 66861-UP
7	01010-81235	BOLT	2	SN: 66861-UP
8	01643-31232	WASHER	2	SN: 66861-UP
9	22B-01-41161	BRACKET	1	SN: 66861-UP
10	01010-81025	BOLT	2	SN: 66861-UP
11	01643-31032	WASHER	2	SN: 66861-UP
12	22B-01-41450	HOSE	1	SN: 66861-UP
13	07289-00105	CLAMP	2	SN: 66861-UP
14	22B-01-43310	NIPPLE	1	SN: 66861-UP
15	6206-71-1770	JOINT	1	SN: 66861-UP
16	07206-30710	BOLT, JOINT	1	SN: 66861-UP
17	07005-01012	SEAL, WASHER	2	SN: 66861-UP
18	22B-01-43320	HOSE ASSEMBLY	1	SN: 66861-UP
19	07285-00125	CLIP	2	SN: 66861-UP
20	6131-81-8820	NIPPLE	1	SN: 66861-UP
21	04434-51410	CLIP	1	SN: 66861-UP
22	01010-81020	BOLT	1	SN: 66861-UP
23	01643-31032	WASHER	1	SN: 66861-UP
24	7861-93-1430	SENSOR, DUST INDICATOR	1	SN: 66861-UP
25	08211-00720	CLIP	1	SN: 66861-UP
26	124-01-56910	BAND	2	SN: 66861-UP
27	124-01-56920	PIN	2	SN: 66861-UP
28	124-01-56930	PIN	2	SN: 66861-UP
29	6110-23-6520	BOLT	2	SN: 66861-UP
30	22B-01-41272	BRACKET	1	SN: 66861-UP
31	01010-81025	BOLT	2	SN: 66861-UP
32	01643-31032	WASHER	2	SN: 66861-UP
33	6252-81-7800	AIRFLOW SENSOR	1	SN: 66861-UP
34	01252-B0410	BOLT, WITH HEX SOCKET HOLE	2	SN: 66861-UP

Open this exact parts catalogue on K-Part

Item	Part No.	Part Name	Qty	Options
35	01640-20408	WASHER	2	SN: 66861-UP

Reference: B0200-002002

Open this exact parts catalogue on K-Part

Get the complete PDF catalogue

Komatsu PC128US-11 (JPN) S/N 70001-UP (Japanese)

$89

with PayPal | Store cart: $99

Buy this PDF on Manuals Komatsu

Check the model, serial range and language before payment.

Download instructions are emailed after payment confirmation.

This free sample contains 10 catalogue pages.