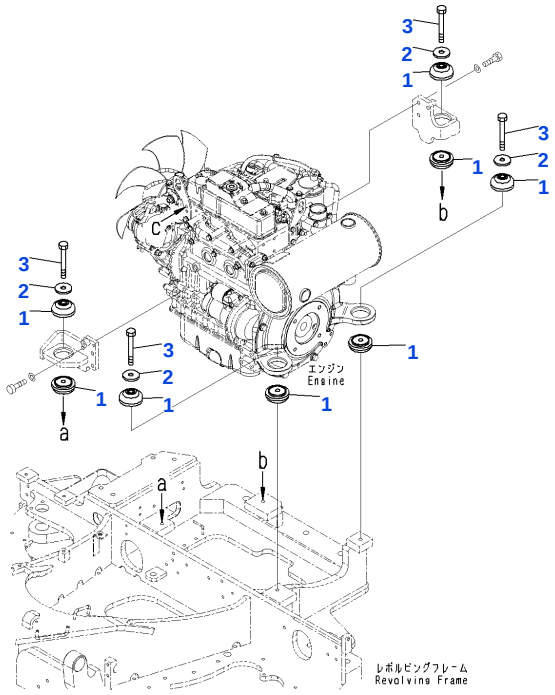

00089579

Reference: B0100-001001

B001001 ENGINE MOUNTING, (#5601-)

Item	Part No.	Part Name	Qty	Options
1	21U-01-31211	CUSHION	8	SN: 5601-UP
2	21U-01-31221	WASHER	4	SN: 5601-UP
3	01011-81200	BOLT	4	SN: 5601-UP

Reference: B0100-001001

Open this exact parts catalogue on K-Part

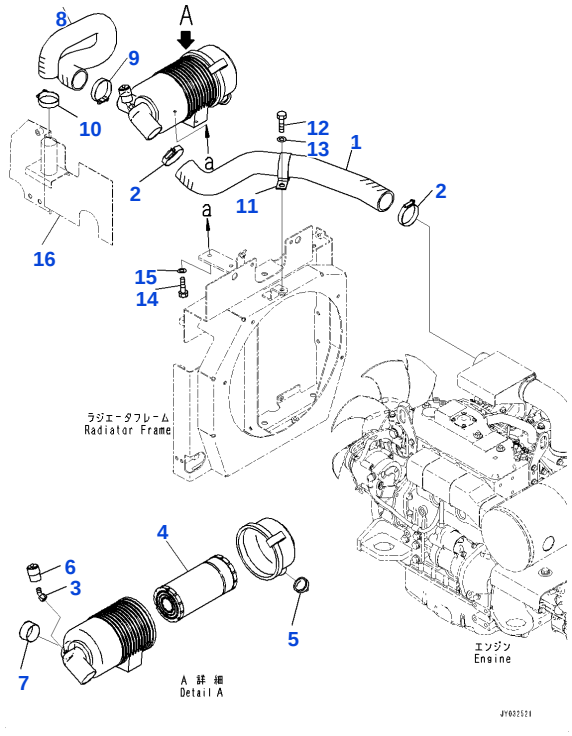

Reference: B0300-001001

B002001 AIR CLEANER, (#5601-)

Item	Part No.	Part Name	Qty	Options
1	21U-01-61130	HOSE	1	SN: 5601-UP
2	07281-00709	CLAMP	2	SN: 5601-UP
	21U-01-61120	AIR CLEANER ASSEMBLY	1	SN: 5601-UP
3	YM119626-12800	• ORIFICE	1	SN: 5601-UP
4	YM119808-12520	• ELEMENT	1	SN: 5601-UP
5	YM119808-12540	• VALVE, UNLOAD	1	SN: 5601-UP
6	YM126650-12680	• INDICATOR, DUST	1	SN: 5601-UP
7	YM129259-12570	• LINK	1	SN: 5601-UP
8	22F-01-31270	HOSE	1	SN: 5601-UP
9	07281-00709	CLAMP	1	SN: 5601-UP
10	07281-00609	CLAMP, HOSE	1	SN: 5601-UP
11	208-62-38370	CLIP	1	SN: 5601-UP
12	01010-81020	BOLT	1	SN: 5601-UP
13	01643-31032	WASHER	1	SN: 5601-UP
14	01010-80820	BOLT	2	SN: 5601-UP
15	01643-30823	WASHER	2	SN: 5601-UP
16	21U-54-62110	COVER (RIGHT COVER, AIR CLEANER COVER)	-1	SN: UP

Reference: B0300-001001

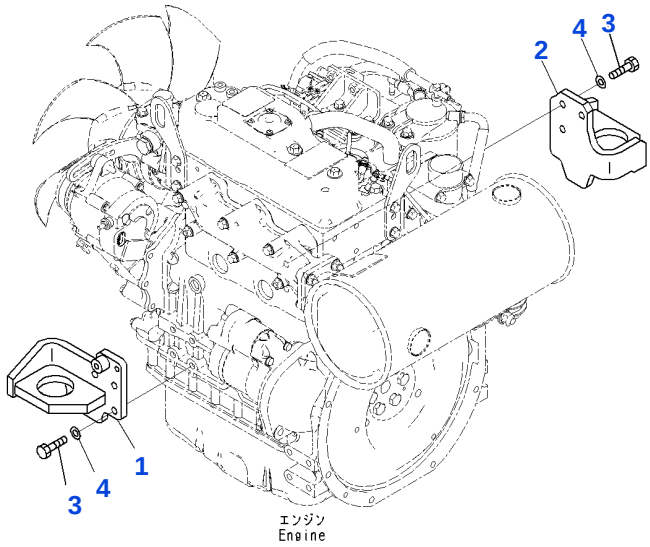

Reference: B9999-001001

B003001 ENGINE, BRACKET(#5601-)

Item	Part No.	Part Name	Qty	Options
1	22F-01-31161	BRACKET	1	SN: 5601-UP
2	22F-01-31170	BRACKET	1	SN: 5601-UP
3	01010-81025	BOLT	6	SN: 5601-UP
4	01643-31032	WASHER	6	SN: 5601-UP

Reference: B9999-001001

Open this exact parts catalogue on K-Part

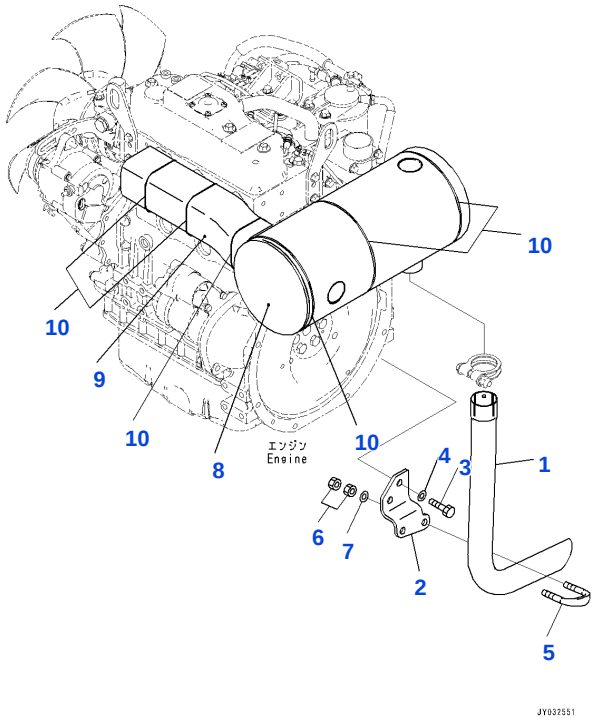

Reference: B9999-001002

B003002 ENGINE, EXHAUST MUFFLER RELATED PARTS(#5601-)

Item	Part No.	Part Name	Qty	Options
1	22F-01-51210	PIPE	1	SN: 5601-UP
2	22F-01-31211	BRACKET	1	SN: 5601-UP
3	01010-81025	BOLT	2	SN: 5601-UP
4	01643-31032	WASHER	2	SN: 5601-UP
5	07283-34346	U BOLT	1	SN: 5601-UP
6	01582-11008	NAT	4	SN: 5601-UP
7	01643-31032	WASHER	2	SN: 5601-UP
8	22F-01-51170	SHEET	1	SN: 5601-UP
9	21U-01-31420	SHEET	1	SN: 5601-UP
10	22L-01-21440	WOW	6	SN: 5601-UP

Reference: B9999-001002

Open this exact parts catalogue on K-Part

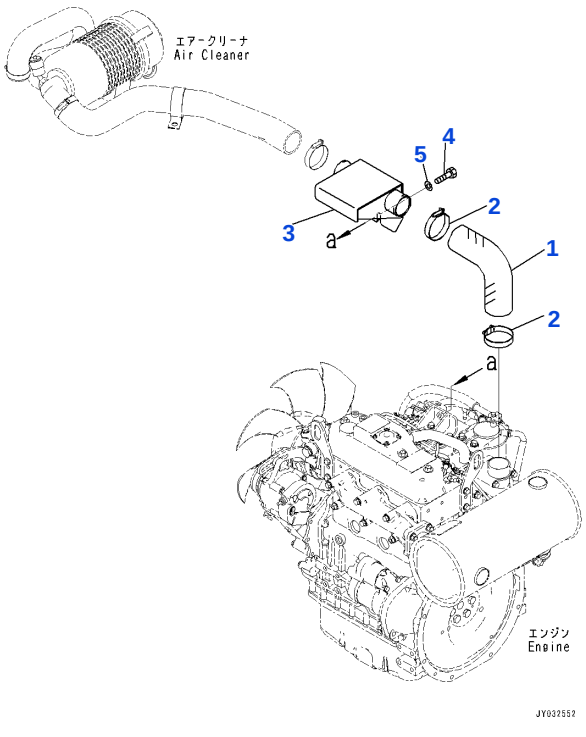

Reference: B9999-001003

B003003 ENGINE, AIR CLEANER RELATED PARTS (#5601-)

Item	Part No.	Part Name	Qty	Options
1	21U-01-61110	HOSE	1	SN: 5601-UP
2	07281-00709	CLAMP	2	SN: 5601-UP
3	22F-01-31611	CHAMBA	1	SN: 5601-UP
4	01010-80825	BOLT	2	SN: 5601-UP
5	01643-30823	WASHER	2	SN: 5601-UP

Reference: B9999-001003

Open this exact parts catalogue on K-Part

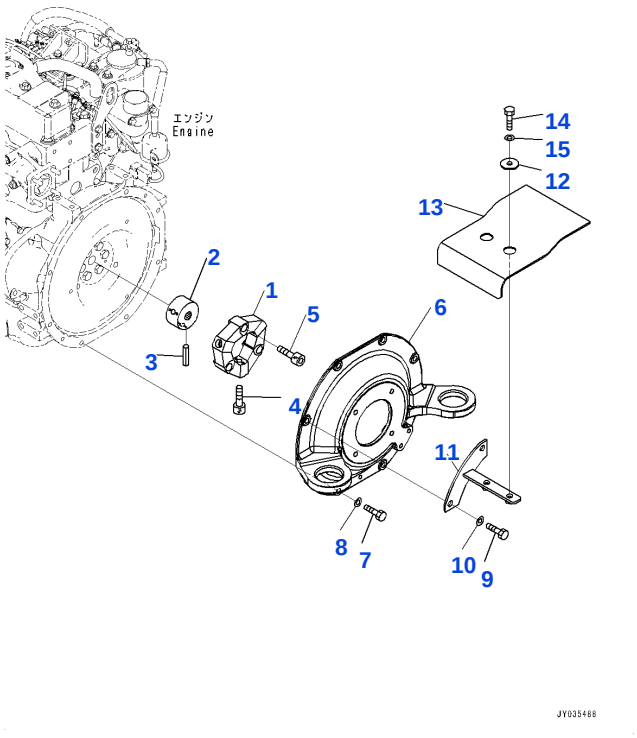

Reference: B9999-001004

B003004 ENGINE, DAMPER (#5601-)

Item	Part No.	Part Name	Qty	Options
	22F-01-21300	COUPLING	1	SN: 5601-UP
1	22L-01-21710	• RUBBER	1	SN: 5601-UP
2	20T-01-81110	• BOSS	1	SN: 5601-UP
3	04025-00512	• PIN, SPRING	6	SN: 5601-UP
4	01252-31240	• BOLT, WITH HEX SOCKET HOLE	3	SN: 5601-UP
5	01252-31240	BOLT, WITH HEX SOCKET HOLE	3	SN: 5601-UP
6	22L-01-21312	COVER	1	SN: 5601-UP
7	01010-81025	BOLT	6	SN: 5601-UP
8	01643-31032	WASHER	6	SN: 5601-UP
9	01010-81030	BOLT	2	SN: 5601-UP
10	01643-31032	WASHER	2	SN: 5601-UP
11	22F-01-31811	BRACKET	1	SN: 5601-UP
12	203-54-56960	COLOR	2	SN: 5601-UP
13	22F-01-31821	SHEET	1	SN: 5601-UP
14	01010-81025	BOLT	2	SN: 5601-UP
15	01643-31032	WASHER	2	SN: 5601-UP

Reference: B9999-001004

Open this exact parts catalogue on K-Part

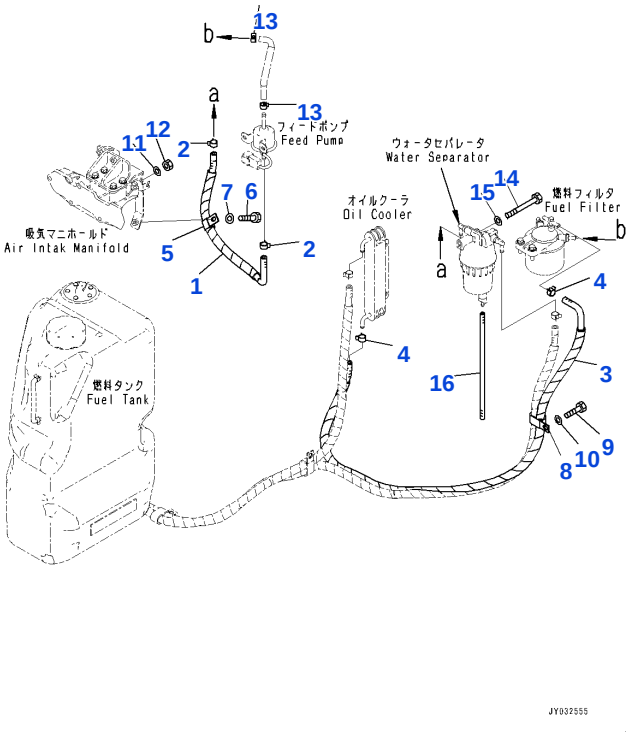

Reference: B9999-001005

B003005 ENGINE, FUEL PIPING(#5601-)

Item	Part No.	Part Name	Qty	Options
1	22F-04-51210	HOSE ASSEMBLY	1	SN: 5601-UP
2	11Y-09-11130	CLAMP	2	SN: 5601-UP
3	21U-04-61110	HOSE ASSEMBLY	1	SN: 5640-UP
	22F-04-51240	HOSE ASSEMBLY	1	SN: 5601-5639
4	11Y-09-11130	CLAMP	2	SN: 5601-UP
5	04434-51908	CLIP	1	SN: 5601-UP
6	01010-80816	BOLT	1	SN: 5601-UP
7	01643-30823	WASHER	1	SN: 5601-UP
8	04435-51910	CLIP	1	SN: 5601-UP
9	01010-81020	BOLT	1	SN: 5601-UP
10	01643-31032	WASHER	1	SN: 5601-UP
11	01643-30823	WASHER	1	SN: 5601-UP
12	01580-10806	NAT	1	SN: 5601-UP
13	11Y-09-11130	CLAMP	2	SN: 5601-UP
14	01010-80895	BOLT	1	SN: 5601-UP
15	01643-30823	WASHER	1	SN: 5601-UP
16	22L-04-21220	HOSE	1	SN: 5601-UP
		[A1] - PARTS MARKED WITH THIS SYMBOL AND THE PARTS LISTED ON THE LINE IMMEDIATELY ABOVE CAN BE USED IN PLACE OF EACH OTHER.		SN: UP

Reference: B9999-001005

Open this exact parts catalogue on K-Part

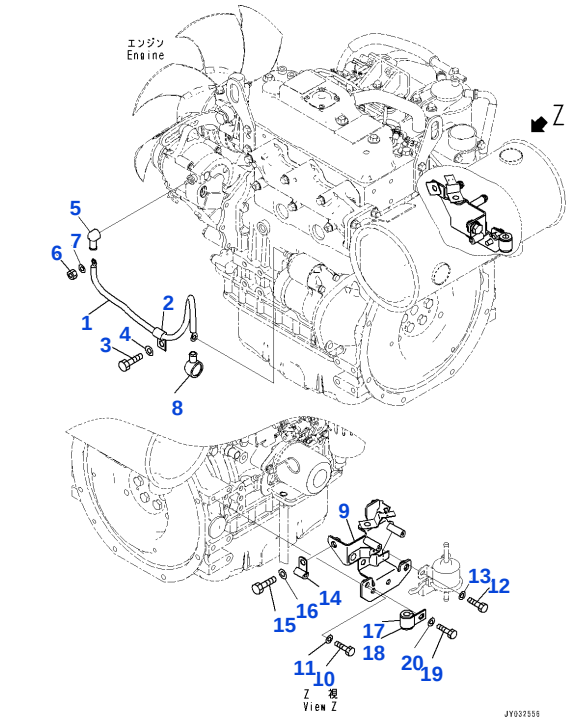

Reference: B9999-001006

B003006 ENGINE, FEED PUMP MOUNTING BRACKET AND STARTER CABLE(#5601-)

Item	Part No.	Part Name	Qty	Options
1	22L-06-21280	CABLE	1	SN: 5601-UP
2	04434-51010	CLIP	1	SN: 5601-UP
3	01010-81020	BOLT	1	SN: 5601-UP
4	01643-31032	WASHER	1	SN: 5601-UP
5	08038-10519	CAP, TERMINAL	1	SN: 5601-UP
6	01580-10605	NAT	1	SN: 5601-UP
7	01640-20610	WASHER	1	SN: 5601-UP
8	08038-00525	CAP, TERMINAL	1	SN: 5601-UP
9	22F-01-51621	BRACKET	1	SN: 5601-UP
10	01010-80816	BOLT	2	SN: 5601-UP
11	01643-30823	WASHER	2	SN: 5601-UP
12	01010-80616	BOLT	2	SN: 5601-UP
13	01643-30623	WASHER	2	SN: 5601-UP
14	600-051-2060	CLIP	1	SN: 5601-UP
15	01010-81020	BOLT	1	SN: 5601-UP
16	01643-31032	WASHER	1	SN: 5601-UP
17	04434-51708	CLIP	1	SN: 5601-UP
18	07095-40211	CUSHION	1	SN: 5601-UP
19	01010-80816	BOLT	1	SN: 5601-UP
20	01643-30823	WASHER	1	SN: 5601-UP

Reference: B9999-001006

Open this exact parts catalogue on K-Part

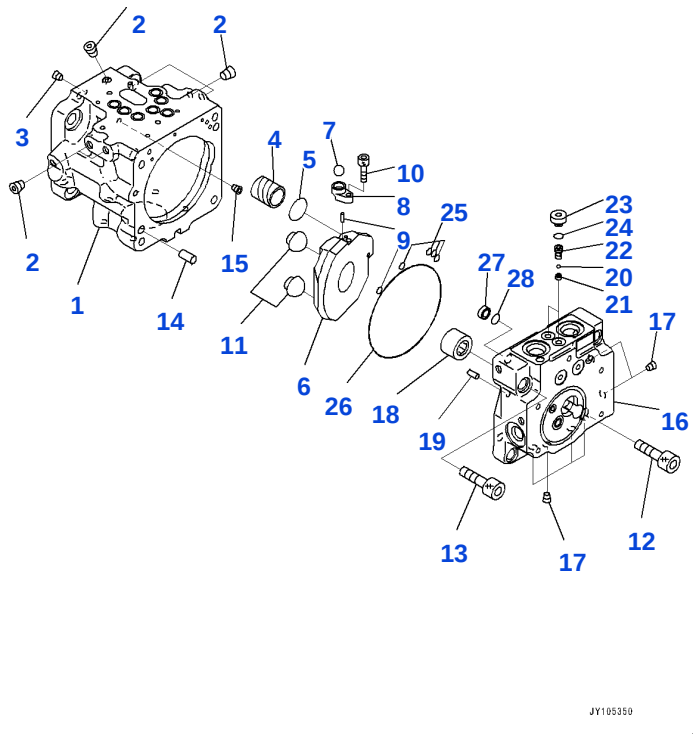

Reference: B9999-001007

B003007 ENGINE, PISTON PUMP (1/6)(#5601-)

Item	Part No.	Part Name	Qty	Options
	708-3S-00750	PUMP ASSEMBLY, 40A ALTERNATOR	1	SN: 5601-UP
	708-3S-01750	• PUMP SUBASSEMBLY	1	SN: 5601-UP
	708-3S-04760	• • CASE ASSEMBLY	1	SN: 5601-UP
1		• • • CASE, PUMP	1	SN: 5601-UP
2		• • • PLUG, STOCKING	12	SN: 5601-UP
3		• • • PLUG, STOCKING	1	SN: 5601-UP
4		• • • SLEEVE	1	SN: 5601-UP
5		• • • LINK	1	SN: 5601-UP
6	708-3S-13550	• • CAM, ROCKER	1	SN: 5601-UP
7		• • BALL	1	SN: 5601-UP
8	708-3S-14141	• • SPACER	1	SN: 5601-UP
9		• • PIN	2	SN: 5601-UP
10		• • BOLT, WITH HEX SOCKET HOLE	1	SN: 5601-UP
11	708-1T-33432	• • BALL, RETAINER	2	SN: 5601-UP
12	01252-61235	• • BOLT, WITH HEX SOCKET HOLE	2	SN: 5601-UP
13	01252-61255	• • BOLT, WITH HEX SOCKET HOLE	2	SN: 5601-UP
14	04020-01024	• • PIN, DOWEL	2	SN: 5601-UP
15	708-3T-11310	• • ORIFICE	1	SN: 5601-UP
	708-3S-04741	• • CAP SUBASSEMBLY	1	SN: 5623-UP
	708-3S-04740	• • CAP SUBASSEMBLY	1	SN: 5601-5622
16		• • • CAP, END	1	SN: 5623-UP
		• • • CAP, END	1	SN: 5601-5622
17		• • • PLUG, STOCKING	12	SN: 5601-UP
18	708-21-12760	• • BEARING	1	SN: 5601-UP
19	720-68-19610	• • PIN	1	SN: 5601-UP
	708-3S-04750	• • VALVE SUBASSEMBLY	2	SN: 5601-UP
20		• • • BALL	1	SN: 5601-UP
21		• • • SHEET	1	SN: 5601-UP
22		• • • PLUG	1	SN: 5601-UP
23	708-3S-11590	• • • PLUG	1	SN: 5601-UP
24	07000-B1010	• • • O-RING	1	SN: 5601-UP
25	07000-B1006	• • O-RING	5	SN: 5601-UP
26	07000-B2130	• • O-RING	1	SN: 5601-UP
27	708-2L-25480	• • FILTER	1	SN: 5601-UP

Open this exact parts catalogue on K-Part

Item	Part No.	Part Name	Qty	Options
28	708-2L-25490	• • O-RING	1	SN: 5601-UP
		[C1] - PARTS WITH THIS SYMBOL CANNOT BE SUPPLIED SEPARATELY. SUPPLIED WITH ASSEMBLED PARTS.		SN: UP
		[C2] - PARTS MARKED WITH THIS SYMBOL ARE AVAILABLE TO SPECIFIC KOMATSU DEALERS. IT CANNOT BE SUPPLIED SEPARATELY. ONLY ASSEMBLED PARTS ARE SUPPLIED.		SN: UP

Reference: B9999-001007

Open this exact parts catalogue on K-Part

Get the complete PDF catalogue

Komatsu PC30UUC-6 (JPN) S/N 5601-UP (Japanese)

$89

with PayPal | Store cart: $99

Buy this PDF on Manuals Komatsu

Check the model, serial range and language before payment.

Download instructions are emailed after payment confirmation.

This free sample contains 10 catalogue pages.