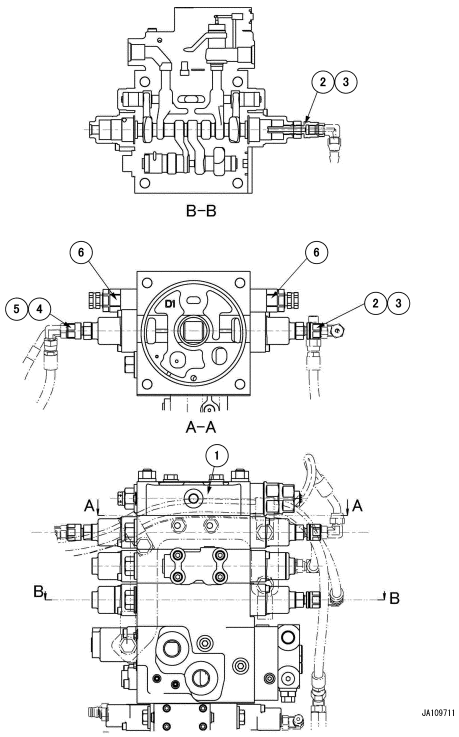

Reference: H0120-020001

H001001 CONTROL VALVE, (#91024-)

Item	Part No.	Part Name	Qty	Options
1	723-56-15802	VALVE ASSEMBLY, CONTROL	1	SN: 91024-UP
	723-58-15902	VALVE ASSEMBLY, CONTROL, BLADE MOUNTED	1	SN: 91024-UP
2	203-62-83970	SLEEVE	2	SN: 91024-UP
3	07002-11423	O-RING	2	SN: 91024-UP
4	203-62-83240	SLEEVE	1	SN: 91024-UP
5	07002-11423	O-RING	1	SN: 91024-UP
6	723-90-61300	VALVE ASSEMBLY, SUCTION RELIEF	2	SN: 91024-UP

Reference: H0120-020001

Open this exact parts catalogue on K-Part

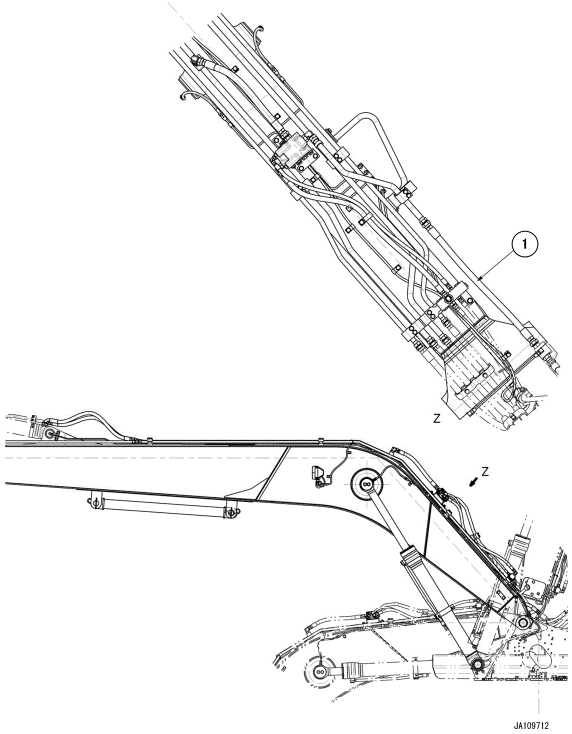

Reference: H1220-010001

H002001 ARM AND BUCKET PIPING, (#91024-)

Item	Part No.	Part Name	Qty	Options
1	02777-206A9	HOSE	1	SN: 91024-UP

Reference: H1220-010001

Open this exact parts catalogue on K-Part

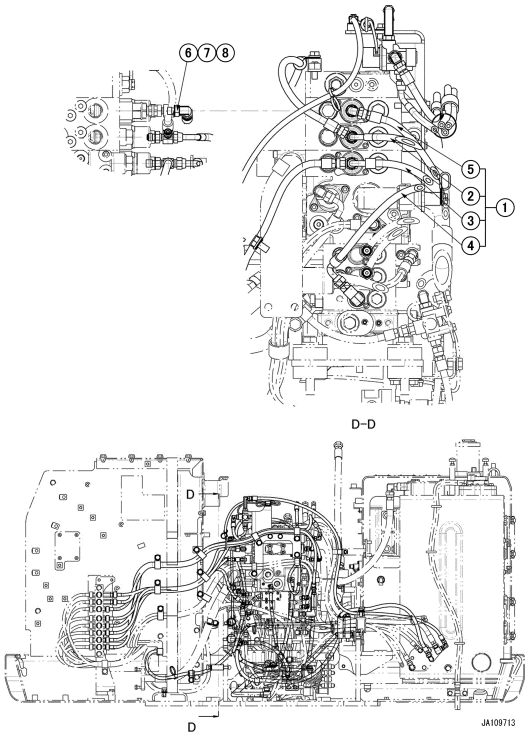

Reference: H1840-011001

H003001 PPC VALVE PIPING, (#91024-)

Item	Part No.	Part Name	Qty	Options
1	2A3-949-1340	HOSE ASSEMBLY	1	SN: 91024-UP
2	2A3-62-12871	HOSE	1	SN: 91024-UP
3	2A3-62-12880	HOSE	1	SN: 91024-UP
4	2A3-62-16921	HOSE	1	SN: 91024-UP
5	2A3-949-1350	HOSE	1	SN: 91024-UP
6	02782-10210	ERBO	1	SN: 91024-UP
7	07002-11423	O-RING	1	SN: 91024-UP
8	02896-11008	O-RING	1	SN: 91024-UP

Reference: H1840-011001

Open this exact parts catalogue on K-Part

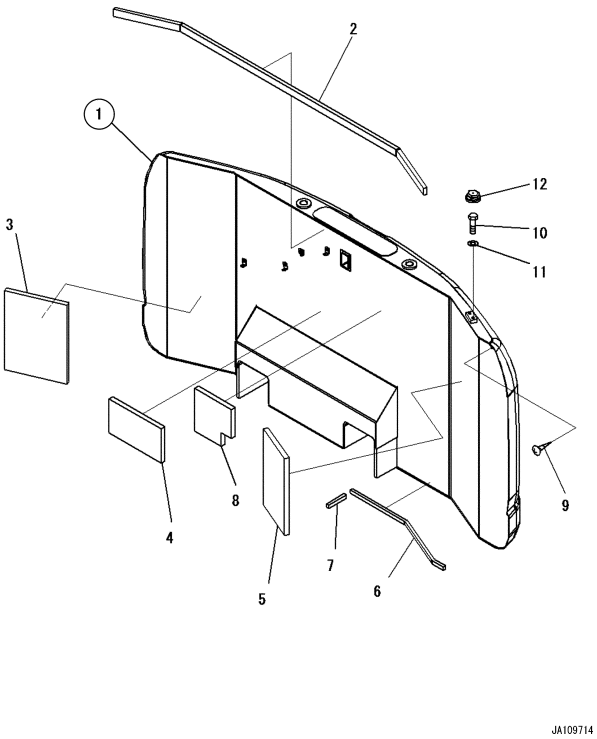

Reference: M1510-015001

M001001 COUNTERWEIGHT, (#91024-)

Item	Part No.	Part Name	Qty	Options
1	2A3-949-1420	WEIGHT, 2000KG	1	SN: 91024-UP
2	2A3-46-15131	SHEET	1	SN: 91024-UP
3	2A3-46-15140	SHEET	1	SN: 91024-UP
4	2A3-46-15150	SHEET	1	SN: 91024-UP
5	2A3-46-15160	SHEET	1	SN: 91024-UP
6	2A3-46-15220	SEAL	1	SN: 91024-UP
7	2A3-46-15230	SEAL	1	SN: 91024-UP
8	2A3-46-15241	SHEET	1	SN: 91024-UP
9	01370-00508	SCREW	1	SN: 91024-UP
10	01010-81220	BOLT	2	SN: 91024-UP
11	01643-31232	WASHER	2	SN: 91024-UP
12	22B-54-34770	CAP	2	SN: 91024-UP

Reference: M1510-015001

Open this exact parts catalogue on K-Part

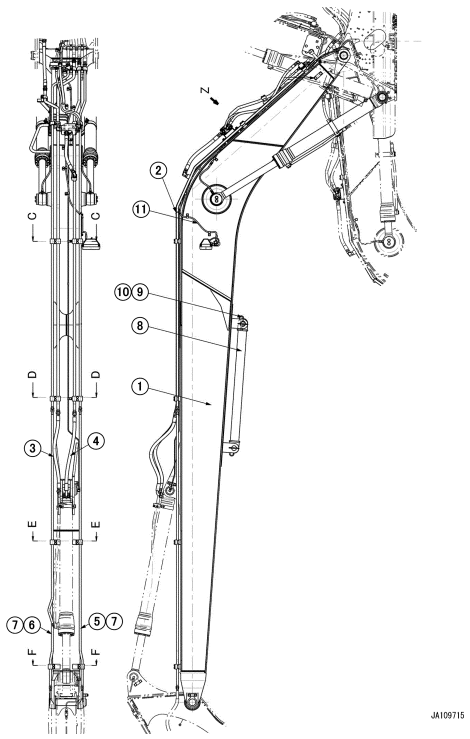

Reference: T1110-020001

T001001 BOOM, (1/3)(#91024-)

Item	Part No.	Part Name	Qty	Options
1	2A3-949-1111	BOOM	1	SN: 91024-UP
2	08034-40521	BAND	1	SN: 91024-UP
3	02777-00609	HOSE, FACE SEAL TYPE	1	SN: 91024-UP
4	203-62-83960	HOSE	1	SN: 91024-UP
5	203-62-83950	TUBE	1	SN: 91024-UP
6	2A3-949-1180	TUBE	1	SN: 91024-UP
7	02896-11012	O-RING	2	SN: 91024-UP
8	20Y-70-84371	BRACKET	1	SN: 91024-UP
9	KV-C120-3140	PIN	2	SN: 91024-UP
10	KV-C120-3150	PIN	2	SN: 91024-UP
11	2A3-949-1470	WIRING HARNESS	1	SN: 91024-UP

Reference: T1110-020001

Open this exact parts catalogue on K-Part

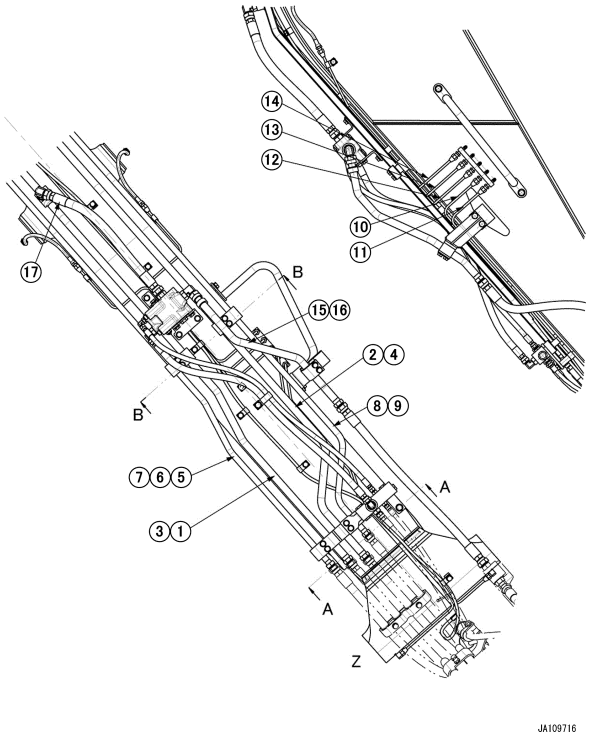

Reference: T1110-020002

T001002 BOOM, (2/3)(#91024-)

Item	Part No.	Part Name	Qty	Options
1	2A3-949-1150	TUBE	1	SN: 91024-UP
2	2A3-949-1160	TUBE	1	SN: 91024-UP
3	02896-11018	O-RING	2	SN: 91024-UP
4	02896-11018	O-RING	2	SN: 91024-UP
5	2A3-949-1140	TUBE	1	SN: 91024-UP
6	02896-11018	O-RING	1	SN: 91024-UP
7	02896-11015	O-RING	1	SN: 91024-UP
8	2A3-949-1170	TUBE	1	SN: 91024-UP
9	02896-11015	O-RING	2	SN: 91024-UP
10	22B-949-1320	TUBE	1	SN: 91024-UP
11	22B-949-1310	TUBE	1	SN: 91024-UP
12	22B-949-1330	TUBE	1	SN: 91024-UP
13	22B-949-1340	TUBE	1	SN: 91024-UP
14	22B-949-1350	TUBE	1	SN: 91024-UP
15	2A3-949-1190	TUBE	1	SN: 91024-UP
16	02896-11018	O-RING	1	SN: 91024-UP
17	02756-006A5	HOSE	1	SN: 91024-UP

Reference: T1110-020002

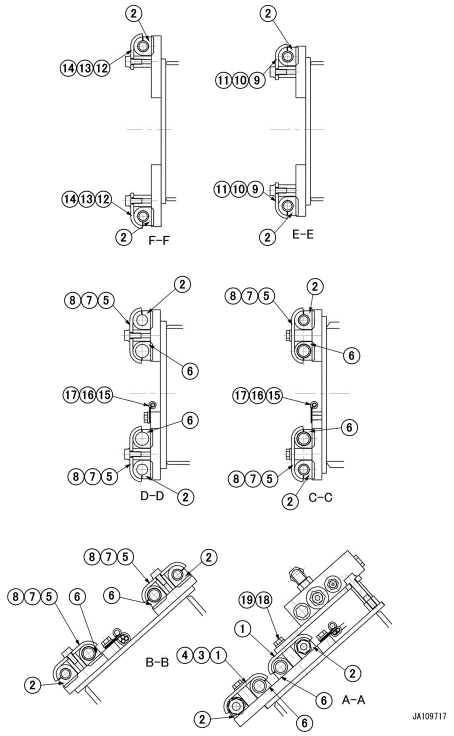

Reference: T1110-020003

T001003 BOOM, (3/3)(#91024-)

Item	Part No.	Part Name	Qty	Options
1	22B-70-19280	CLAMP	2	SN: 91024-UP
2	203-62-58810	CUSHION	12	SN: 91024-UP
3	01010-81025	BOLT	2	SN: 91024-UP
4	01643-31032	WASHER	2	SN: 91024-UP
5	22B-70-19280	CLAMP	6	SN: 91024-UP
6	21K-62-35270	CUSHION	8	SN: 91024-UP
7	01010-81025	BOLT	12	SN: 91024-UP
8	01643-31032	WASHER	12	SN: 91024-UP
9	22B-70-19290	PLATE	2	SN: 91024-UP
10	01010-81025	BOLT	4	SN: 91024-UP
11	01643-31032	WASHER	4	SN: 91024-UP
12	22B-70-19290	PLATE	2	SN: 91024-UP
13	01010-81025	BOLT	4	SN: 91024-UP
14	01643-31032	WASHER	4	SN: 91024-UP
15	04434-50812	CLIP	2	SN: 91024-UP
16	01010-81020	BOLT	2	SN: 91024-UP
17	01643-31032	WASHER	2	SN: 91024-UP
18	01010-81035	BOLT	2	SN: 91024-UP
19	01643-31032	WASHER	2	SN: 91024-UP

Reference: T1110-020003

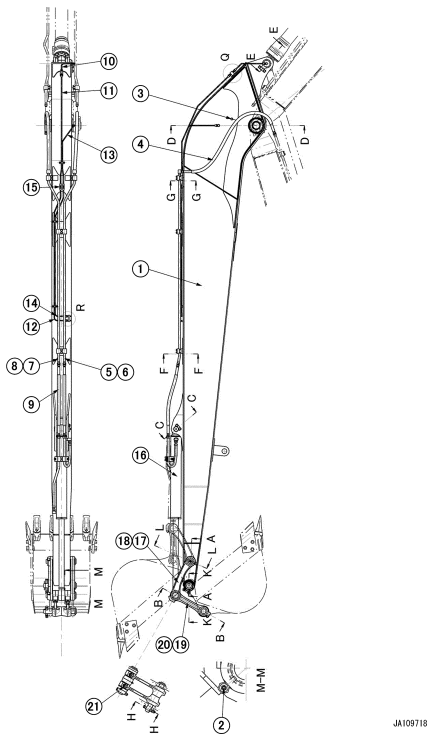

Reference: T1210-023001

T002001 ARM - BUCKET LINKAGE, (1/3)(#91024-)

Item	Part No.	Part Name	Qty	Options
1	22B-949-3510	ARM	1	SN: 91024-UP
2	07020-00000	FITTING, GREASE	1	SN: 91024-UP
3	20T-54-74510	CAP	1	SN: 91024-UP
4	02756-20414	HOSE, FACE SEAL TYPE	2	SN: 91024-UP
5	203-62-83840	TUBE	1	SN: 91024-UP
6	02896-11012	O-RING	2	SN: 91024-UP
7	203-62-83850	TUBE	1	SN: 91024-UP
8	02896-11012	O-RING	2	SN: 91024-UP
9	02756-204A7	HOSE, FACE SEAL TYPE	2	SN: 91024-UP
10	203-70-83230	TUBE	1	SN: 91024-UP
11	22B-949-1370	TUBE	1	SN: 91024-UP
12	22B-949-1390	TUBE	1	SN: 91024-UP
13	22B-949-1360	TUBE	1	SN: 91024-UP
14	22B-949-1380	TUBE	1	SN: 91024-UP
15	KV-X5X0-7080	UNION	2	SN: 91024-UP
16	707-00-XH911	CYLINDER GROUP	1	SN: 91024-UP
17	21W-70-44280	LINK, RIGHT	1	SN: 91024-UP
18	21W-70-44290	LINK, LEFT	1	SN: 91024-UP
19	201-70-64110	LINK, RIGHT	1	SN: 91024-UP
20	201-70-64120	LINK, LEFT	1	SN: 91024-UP
21	07020-00900	FITTING, GREASE	2	SN: 91024-UP

Reference: T1210-023001

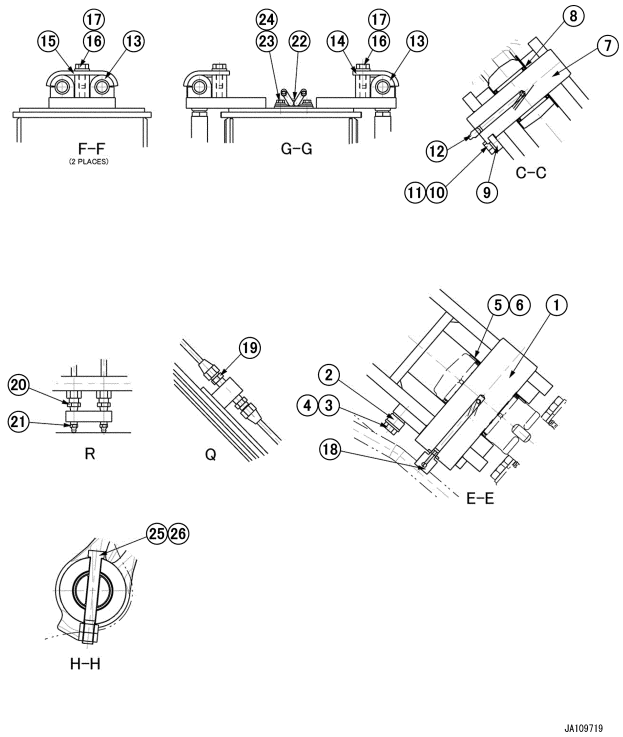

Reference: T1210-023002

T002002 ARM - BUCKET LINKAGE, (2/3)(#91024-)

Item	Part No.	Part Name	Qty	Options
1	203-70-42121	PIN	1	SN: 91024-UP
2	205-70-66580	PLATE	1	SN: 91024-UP
3	01010-81230	BOLT	2	SN: 91024-UP
4	01643-31232	WASHER	2	SN: 91024-UP
5	21Y-70-14830	SPACER, THICKNESS=1.0MM	1	SN: 91024-UP
6	21Y-70-14840	SPACER, THICKNESS=2.0MM	1	SN: 91024-UP
7	201-70-72241	PIN	1	SN: 91024-UP
8	201-70-22150	SPACER, THICKNESS=1.0MM	3	SN: 91024-UP
9	04082-00212	LOCK	1	SN: 91024-UP
10	01010-81230	BOLT	2	SN: 91024-UP
11	01643-31232	WASHER	2	SN: 91024-UP
12	07020-00000	FITTING, GREASE	1	SN: 91024-UP
13	203-62-58810	CUSHION	6	SN: 91024-UP
14	22B-70-19290	PLATE	2	SN: 91024-UP
15	22B-70-19280	CLAMP	2	SN: 91024-UP
16	01010-81025	BOLT	8	SN: 91024-UP
17	01643-31032	WASHER	8	SN: 91024-UP
18	20Y-25-11270	ERBO	1	SN: 91024-UP
19	07214-50813	CONNECTOR	2	SN: 91024-UP
20	20Y-70-11540	CONNECTOR	2	SN: 91024-UP
21	07020-00000	FITTING, GREASE	2	SN: 91024-UP
22	22B-Z58-2780	CLIP	3	SN: 91024-UP
23	01010-80612	BOLT	6	SN: 91024-UP
24	01643-30623	WASHER	6	SN: 91024-UP
25	01011-81630	BOLT	1	SN: 91024-UP
26	01580-11613	NAT	2	SN: 91024-UP

Reference: T1210-023002

Open this exact parts catalogue on K-Part

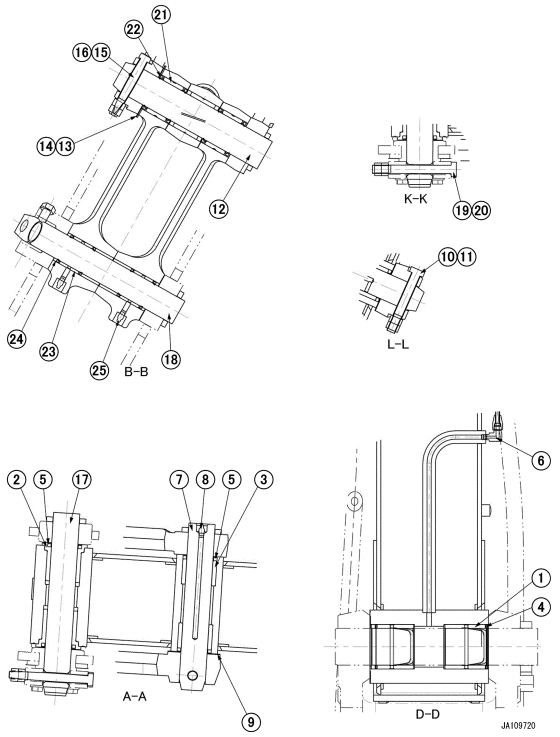

Reference: T1210-023003

T002003 ARM - BUCKET LINKAGE, (3/3)(#91024-)

Item	Part No.	Part Name	Qty	Options
1	203-70-56130	BUSH	2	SN: 91024-UP
2	20X-70-22140	BUSH	2	SN: 91024-UP
3	201-70-72210	BUSH	2	SN: 91024-UP
4	07145-00070	SEAL, DUST	2	SN: 91024-UP
5	130-09-12931	SEAL	4	SN: 91024-UP
6	20Y-25-11270	ERBO	1	SN: 91024-UP
7	21W-70-42180	PIN	1	SN: 91024-UP
8	07020-00000	FITTING, GREASE	1	SN: 91024-UP
9	22C-70-31510	SPACER, THICKNESS=1.0MM	1	SN: 91024-UP
10	01011-81620	BOLT	1	SN: 91024-UP
11	01580-11613	NAT	2	SN: 91024-UP
12	21W-70-42171	PIN	1	SN: 91024-UP
13	21Y-70-14770	SPACER, THICKNESS=1.0MM	1	SN: 91024-UP
14	21Y-70-14780	SPACER, THICKNESS=2.0MM	1	SN: 91024-UP
15	01011-81620	BOLT	1	SN: 91024-UP
16	01580-11613	NAT	2	SN: 91024-UP
17	201-70-64211	PIN	1	SN: 91024-UP
18	201-70-64211	PIN	1	SN: 91024-UP
19	01011-81650	BOLT	1	SN: 91024-UP
20	01580-11613	NAT	2	SN: 91024-UP
21	21W-70-41371	BUSH	2	SN: 91024-UP
22	21W-70-41440	SEAL, DUST	4	SN: 91024-UP
23	21W-70-41381	BUSH	2	SN: 91024-UP
24	21W-70-41450	SEAL	4	SN: 91024-UP
25	07020-00000	FITTING, GREASE	2	SN: 91024-UP

Reference: T1210-023003

Open this exact parts catalogue on K-Part

Get the complete PDF catalogue

Komatsu PC120-11 (JPN) SUPER LONG FRONT SPECIFICATION S/N 91024-UP (JAPANESE)

$89

with PayPal | Store cart: $99

Buy this PDF on Manuals Komatsu

Check the model, serial range and language before payment.

Download instructions are emailed after payment confirmation.

This free sample contains 10 catalogue pages.