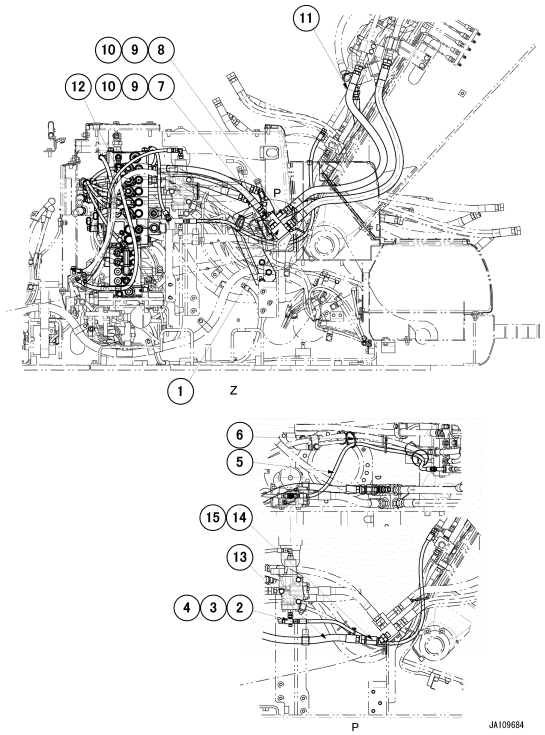

Reference: H1270-018001

H001001 ACTUATOR PIPING - CONTROL VALVE, (1/2)(#90169-)

Item	Part No.	Part Name	Qty	Options
1	2A3-946-1251	BLOCK	1	SN: 90169-UP
2	2A3-62-11230	TEE, OPTION	1	SN: 90169-UP
3	07002-11423	O-RING, OPTION	1	SN: 90169-UP
4	02896-11008	O-RING, OPTION	2	SN: 90169-UP
5	2A3-946-1241	HOSE, OPTION	1	SN: 90169-UP
6	08034-20536	BAND, OPTION	3	SN: 90169-UP
7	02781-00522	UNION	1	SN: 90169-UP
8	11Y-62-12430	NIPPLE	1	SN: 90169-UP
9	07002-62434	O-RING	2	SN: 90169-UP
10	02896-61015	O-RING	2	SN: 90169-UP
11	2A3-946-1130	HOSE	1	SN: 90169-UP
12	2A3-946-1530	HOSE	1	SN: 90169-UP
13	2A3-946-1140	HOSE	1	SN: 90169-UP
14	423-60-45470	NIPPLE	1	SN: 90169-UP
15	02896-11018	O-RING	1	SN: 90169-UP

Reference: H1270-018001

Open this exact parts catalogue on K-Part

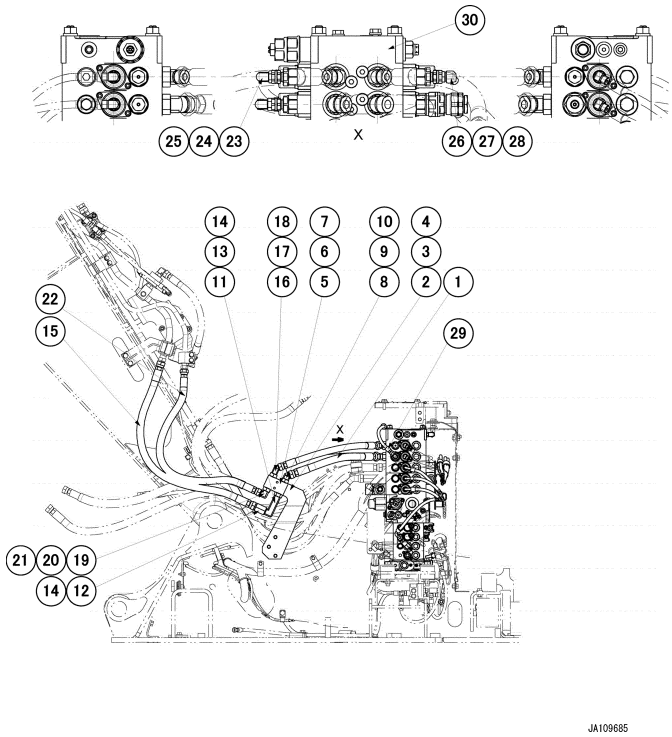

Reference: H1270-018002

H001002 ACTUATOR PIPING - CONTROL VALVE, (2/2)(#90169-)

Item	Part No.	Part Name	Qty	Options
1	2A3-946-1210	HOSE	1	SN: 90169-UP
2	2A3-946-1220	BRACKET	1	SN: 90169-UP
3	01010-81230	BOLT	3	SN: 90169-UP
4	01643-31232	WASHER	3	SN: 90169-UP
5	203-62-65230	BLOCK	1	SN: 90169-UP
6	01010-81030	BOLT	2	SN: 90169-UP
7	01643-31032	WASHER	2	SN: 90169-UP
8	02783-10628	ERBO	1	SN: 90169-UP
9	07002-62434	O-RING	1	SN: 90169-UP
10	02896-61018	O-RING	1	SN: 90169-UP
11	203-62-12450	ERBO	1	SN: 90169-UP
12	423-60-45470	NIPPLE	1	SN: 90169-UP
13	07002-62434	O-RING	1	SN: 90169-UP
14	02896-61018	O-RING	2	SN: 90169-UP
15	02777-20610	HOSE, FACE SEAL TYPE	1	SN: 90169-UP
16	14X-62-34350	ERBO	1	SN: 90169-UP
17	07002-62434	O-RING	1	SN: 90169-UP
18	02896-61015	O-RING	1	SN: 90169-UP
19	02782-10522	ERBO	1	SN: 90169-UP
20	07002-62434	O-RING	1	SN: 90169-UP
21	02896-61015	O-RING	1	SN: 90169-UP
22	203-62-13590	HOSE	1	SN: 90169-UP
23	02782-10210	ERBO	1	SN: 90169-UP
24	07002-11423	O-RING	1	SN: 90169-UP
25	02896-11008	O-RING	1	SN: 90169-UP
26	22P-04-21750	ERBO	1	SN: 90169-UP
27	07002-11423	O-RING	1	SN: 90169-UP
28	02896-11008	O-RING	1	SN: 90169-UP
29	2A3-946-1510	HOSE	1	SN: 90169-UP
30	723-58-15800	VALVE ASSEMBLY, CONTROL	1	SN: 90169-UP
	723-59-15900	VALVE ASSEMBLY, CONTROL, BLADE MOUNTING	1	SN: 90169-UP

Open this exact parts catalogue on K-Part

Open this exact parts catalogue on K-Part

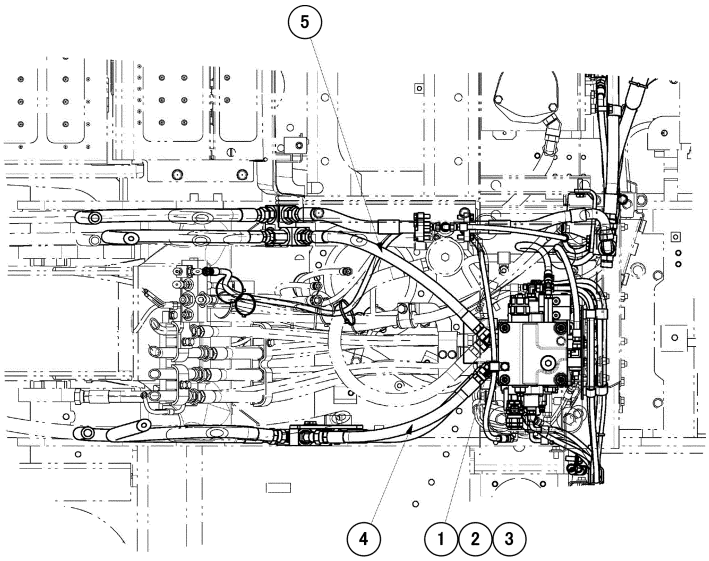

Reference: H1272-002001

H002001 ACTUATOR PIPING - CONTROL VALVE, (#90169-)

Item	Part No.	Part Name	Qty	Options
1	02783-10522	ERBO	2	SN: 90169-UP
2	07002-62434	O-RING	2	SN: 90169-UP
3	02896-61015	O-RING	2	SN: 90169-UP
4	2A3-946-1110	HOSE	1	SN: 90169-UP
5	2A3-946-1120	HOSE	1	SN: 90169-UP

Reference: H1272-002001

Open this exact parts catalogue on K-Part

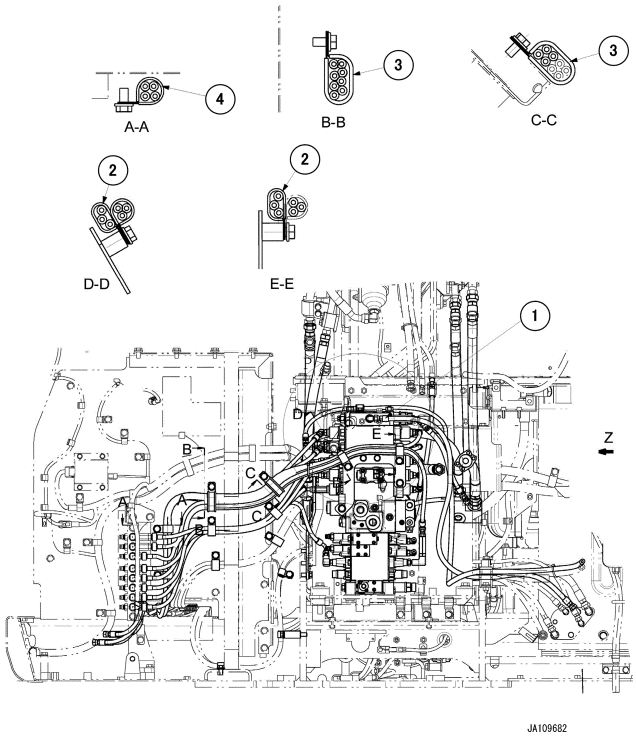

Reference: H1831-013001

H003001 ACTUATOR PIPING - CONTROL VALVE, (#90169-)

Item	Part No.	Part Name	Qty	Options
1	2A3-946-1520	HOSE	1	SN: 90169-UP
2	04435-51912	CLIP	2	SN: 90169-UP
3	22M-977-1140	CLIP	2	SN: 90169-UP
4	04434-53212	CLIP	2	SN: 90169-UP

Reference: H1831-013001

Open this exact parts catalogue on K-Part

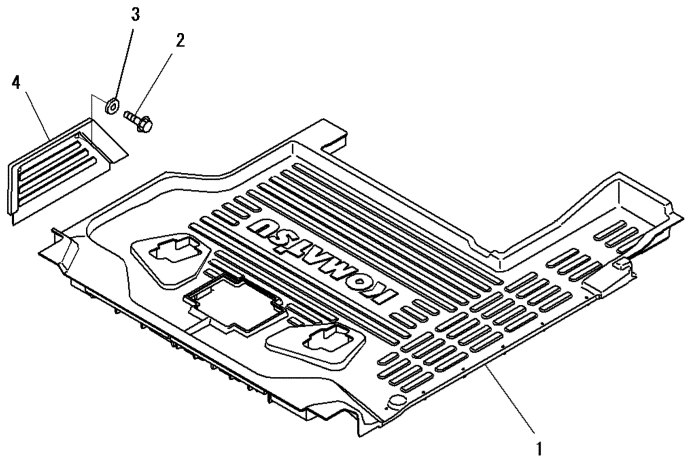

JA109687

Reference: K0310-005001

K001001 FLOOR MAT, (#90169-)

Item	Part No.	Part Name	Qty	Options
1	2A5-43-11281	MATT	1	SN: 90169-UP
2	01435-40616	BOLT, FLANGE TYPE	2	SN: 90169-UP
3	20Y-43-41290	COLOR	2	SN: 90169-UP
4	2A5-43-11261	MATT	1	SN: 90169-UP

Reference: K0310-005001

Open this exact parts catalogue on K-Part

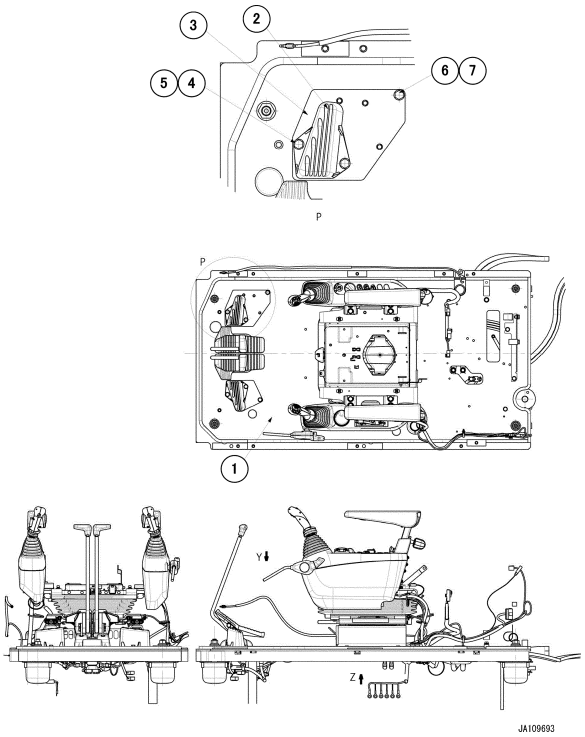

Reference: K1110-062001

K002001 CAB, (1/7)(#90169-)

Item	Part No.	Part Name	Qty	Options
1	2A3-946-1810	FLOOR	1	SN: 90169-UP
2	22U-54-25120	FOOTREST, RIGHT	1	SN: 90169-UP
3	203-Z58-1680	PLATE	1	SN: 90169-UP
4	01010-81025	BOLT	2	SN: 90169-UP
5	01643-31032	WASHER	2	SN: 90169-UP
6	01010-81020	BOLT	1	SN: 90169-UP
7	01643-31032	WASHER	1	SN: 90169-UP

Reference: K1110-062001

Open this exact parts catalogue on K-Part

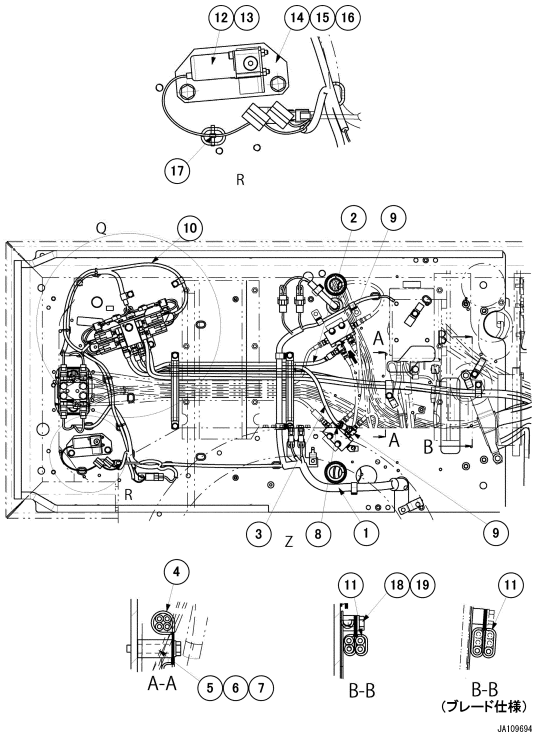

Reference: K1110-062002

K002002 CAB, (2/7)(#90169-)

Item	Part No.	Part Name	Qty	Options
1	2A3-946-2110	WIRING HARNESS	1	SN: 90770-UP
	2A3-946-1710	WIRING HARNESS	1	SN: 90169-90769
2	2A3-946-1820	HOSE	1	SN: 90169-UP
3	2A3-946-1830	HOSE	1	SN: 90169-UP
4	04434-52711	CLIP	1	SN: 90169-UP
5	175-40-22540	SPACER	1	SN: 90169-UP
6	01010-81070	BOLT	1	SN: 90169-UP
7	01643-31032	WASHER	1	SN: 90169-UP
8	02781-0021D	UNION	1	SN: 90169-UP
9	11Y-62-12330	TEA	2	SN: 90169-UP
10	2A3-946-1740	WIRING HARNESS	1	SN: 90169-UP
11	04435-51210	CLIP	2	SN: 90169-UP
	2A3-946-1150	CLIP, BLADE MOUNTING	2	SN: 90169-UP
12	702-21-07610	VALVE, SOLENOID	1	SN: 90169-UP
13	203-60-62230	BOLT	2	SN: 90169-UP
14	203-Z58-1670	BRACKET	1	SN: 90169-UP
15	01010-81016	BOLT	2	SN: 90169-UP
16	01643-31032	WASHER	2	SN: 90169-UP
17	08034-20519	BAND	1	SN: 90169-UP
18	01010-81020	BOLT	1	SN: 90169-UP
19	01643-31032	WASHER	1	SN: 90169-UP

Reference: K1110-062002

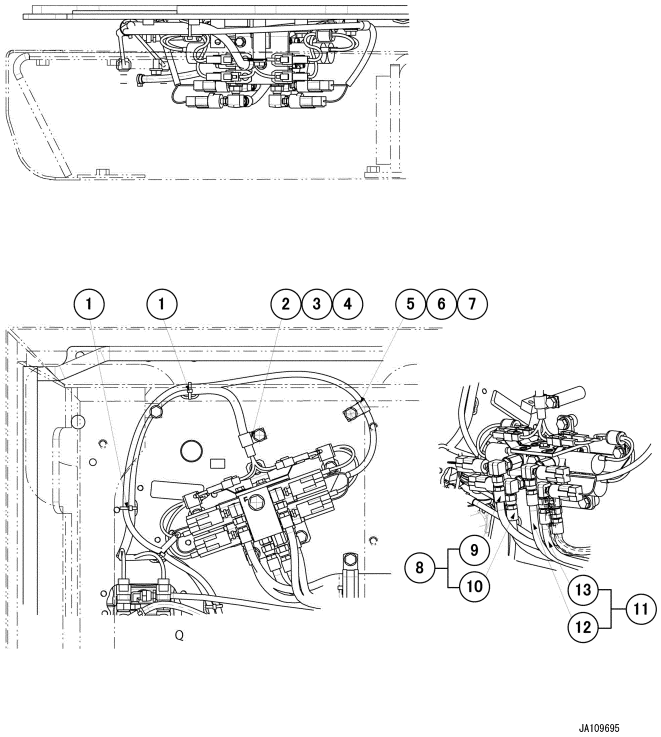

Reference: K1110-062003

K002003 CAB, (3/7)(#90169-)

Item	Part No.	Part Name	Qty	Options
1	08034-20519	BAND	2	SN: 90169-UP
2	04434-51410	CLIP	1	SN: 90169-UP
3	01010-81016	BOLT	1	SN: 90169-UP
4	01643-31032	WASHER	1	SN: 90169-UP
5	04434-51010	CLIP	1	SN: 90169-UP
6	01010-81016	BOLT	1	SN: 90169-UP
7	01643-31032	WASHER	1	SN: 90169-UP
8	2A3-946-1840	HOSE ASSEMBLY	1	SN: 90169-UP
9	2A3-946-1850	HOSE	1	SN: 90169-UP
10	2A3-946-1860	HOSE	1	SN: 90169-UP
11	2A3-946-1870	HOSE ASSEMBLY	1	SN: 90169-UP
12	2A3-946-1880	HOSE	1	SN: 90169-UP
13	2A3-946-1890	HOSE	1	SN: 90169-UP

Reference: K1110-062003

Open this exact parts catalogue on K-Part

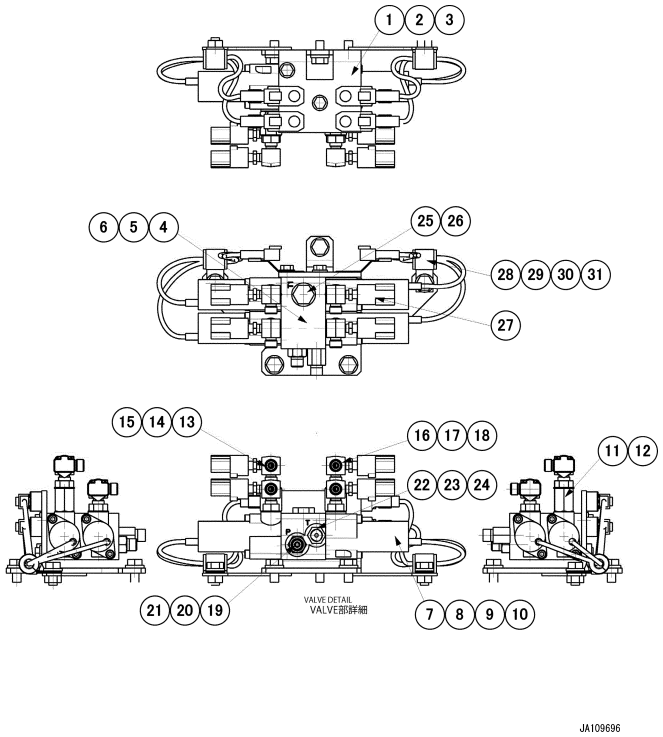

Reference: K1110-062004

K002004 CAB, (4/7)(#90169-)

Item	Part No.	Part Name	Qty	Options
1	2A3-946-1920	BRACKET	1	SN: 90169-UP
2	01010-81020	BOLT	3	SN: 90169-UP
3	01643-31032	WASHER	3	SN: 90169-UP
4	20J-62-13120	BLOCK	1	SN: 90169-UP
5	01010-80820	BOLT	2	SN: 90169-UP
6	01643-30823	WASHER	2	SN: 90169-UP
7	702-21-07311	VALVE, SOLENOID	4	SN: 90169-UP
8	700-93-11320	O-RING	4	SN: 90169-UP
9	07000-12011	O-RING	4	SN: 90169-UP
10	203-60-62220	BOLT	8	SN: 90169-UP
11	11Y-62-12490	UNION	2	SN: 90169-UP
12	07002-11423	O-RING	2	SN: 90169-UP
13	2A3-946-1910	ERBO	2	SN: 90169-UP
14	07002-11423	O-RING	2	SN: 90169-UP
15	02896-11008	O-RING	2	SN: 90169-UP
16	2A3-946-1930	ERBO	2	SN: 90169-UP
17	07002-11423	O-RING	2	SN: 90169-UP
18	02896-11008	O-RING	2	SN: 90169-UP
19	21W-62-43930	NIPPLE	1	SN: 90169-UP
20	07002-11423	O-RING	1	SN: 90169-UP
21	02896-11008	O-RING	1	SN: 90169-UP
22	22J-62-25110	UNION	1	SN: 90169-UP
23	07002-11423	O-RING	1	SN: 90169-UP
24	02896-11008	O-RING	1	SN: 90169-UP
25	07040-11409	PLUG	1	SN: 90169-UP
26	07002-11423	O-RING	1	SN: 90169-UP
27	206-06-61130	SWITCH, PRESSER	4	SN: 90169-UP
28	04434-51710	CLIP	2	SN: 90169-UP
29	07095-20211	CUSHION	2	SN: 90169-UP
30	01010-81020	BOLT	2	SN: 90169-UP
31	01643-31032	WASHER	2	SN: 90169-UP

Reference: K1110-062004

Open this exact parts catalogue on K-Part

Get the complete PDF catalogue

Komatsu PC120-11 (JPN) 2-ATTACHMENT SPEC S/N 90169-UP (Japanese)

$89

with PayPal | Store cart: $99

Buy this PDF on Manuals Komatsu

Check the model, serial range and language before payment.

Download instructions are emailed after payment confirmation.

This free sample contains 10 catalogue pages.