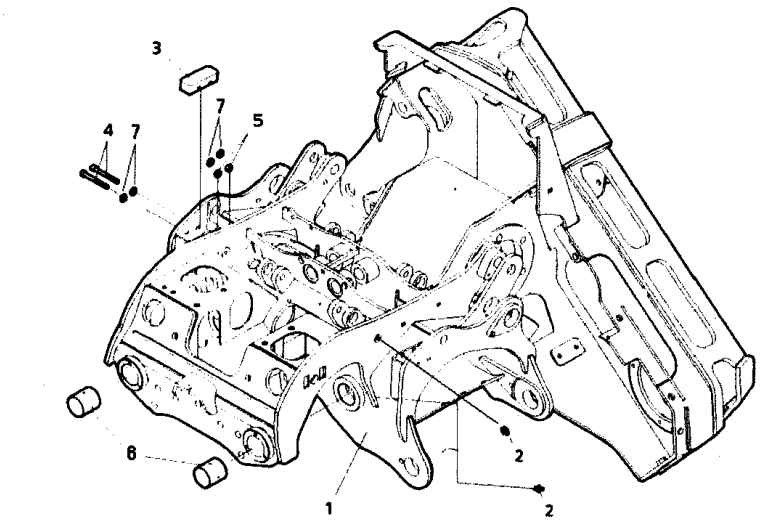

JA105839

Reference: T1620-001001

T001001 BASE, SAW (#90415-)

Item	Part No.	Part Name	Qty	Options
1	21K-Z58-1114	BODY, SHAFT	1	SN: 90415-UP
2	07020-00000	FITTING, GREASE	6	SN: 90415-UP
3	21K-Z58-1630	RUBBER	2	SN: 90415-UP
4	01010-80870	BOLT	4	SN: 90415-UP
5	01596-00807	NAT	4	SN: 90415-UP
6	PZHH-5061376	BUSH	4	SN: 90415-UP
7	01643-30823	WASHER	8	SN: 90415-UP

Reference: T1620-001001

Open this exact parts catalogue on K-Part

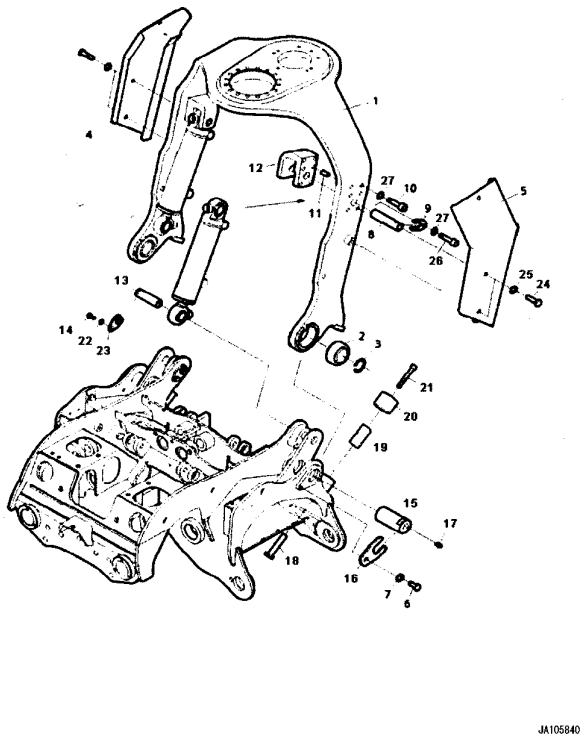

Reference: T1620-001002

T001002 BASE, SUSPENSION LINK (#90415-)

Item	Part No.	Part Name	Qty	Options
1	21K-Z58-1152	LINK	1	SN: 90415-UP
2	PZHH-5061341	BEARING	2	SN: 90415-UP
3	04065-06825	RING, SNAP	2	SN: 90415-UP
4	21K-Z58-2360	COVER	1	SN: 90415-UP
5	21K-Z58-2370	COVER	1	SN: 90415-UP
6	01010-81225	BOLT	2	SN: 90415-UP
7	01643-31232	WASHER	2	SN: 90415-UP
8	21K-Z58-1710	PIN	2	SN: 90415-UP
9	21K-Z58-1510	PLATE	2	SN: 90415-UP
10	01252-A1240	BOLT, WITH HEX SOCKET HOLE	6	SN: 90415-UP
11	21K-Z58-1720	PIN	4	SN: 90415-UP
12	21K-Z58-1270	BRACKET	2	SN: 90415-UP
13	21K-Z58-1730	PIN	2	SN: 90415-UP
14	01010-80825	BOLT	2	SN: 90415-UP
15	21K-Z58-1740	PIN	2	SN: 90415-UP
16	21K-Z58-1521	PLATE	2	SN: 90415-UP
17	07020-00000	FITTING, GREASE	2	SN: 90415-UP
18	21K-Z58-1750	PIN	2	SN: 90415-UP
19	PZHH-5197089	SPRING	2	SN: 90415-UP
20	PZHH-5067336	STOP	2	SN: 90415-UP
21	01252-A0845	BOLT, WITH HEX SOCKET HOLE	2	SN: 90415-UP
22	01643-30823	WASHER	2	SN: 90415-UP
23	21K-Z58-1530	PLATE	2	SN: 90415-UP
24	01010-81225	BOLT	4	SN: 90415-UP
25	01643-31232	WASHER	4	SN: 90415-UP
26	01252-A1245	BOLT, WITH HEX SOCKET HOLE	2	SN: 90415-UP
27	01643-51232	WASHER	8	SN: 90415-UP

Reference: T1620-001002

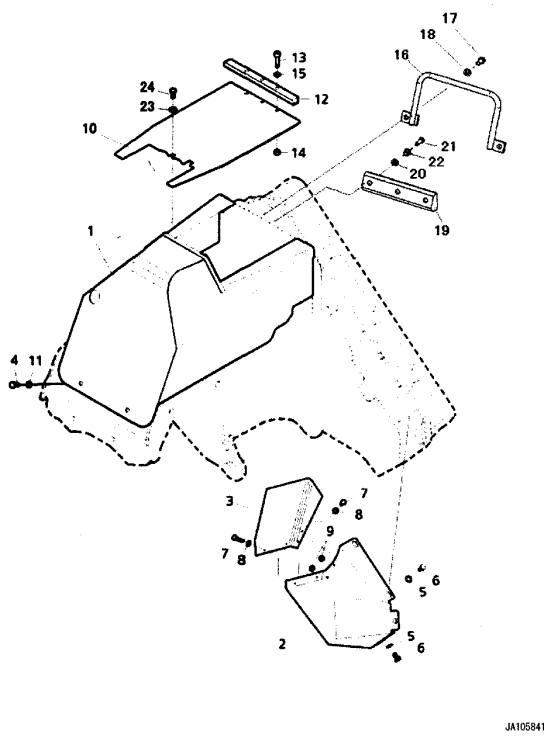

Reference: T1620-001003

T001003 BASE, HOOD COVER (#90415-)

Item	Part No.	Part Name	Qty	Options
1	21K-Z58-1332	FOOD	1	SN: 90415-UP
2	21K-Z58-1351	COVER	1	SN: 90415-UP
3	21K-Z58-1580	SHEET	1	SN: 90415-UP
4	01010-81635	BOLT	2	SN: 90415-UP
5	01643-31232	WASHER	4	SN: 90415-UP
6	01010-81230	BOLT	4	SN: 90415-UP
7	01010-80620	BOLT	4	SN: 90415-UP
8	01643-30623	WASHER	4	SN: 90415-UP
9	01594-00606	NUT, FLANGE TYPE	4	SN: 90415-UP
10	21K-Z58-1343	FOOD	1	SN: 90415-UP
11	01643-31645	WASHER	2	SN: 90415-UP
12	21K-Z58-1360	PLATE	1	SN: 90415-UP
13	01252-A0830	BOLT, WITH HEX SOCKET HOLE	3	SN: 90415-UP
14	01594-00807	NUT, FLANGE TYPE	3	SN: 90415-UP
15	01643-50823	WASHER	3	SN: 90415-UP
16	21K-958-6172	BRACKET	1	SN: 90415-UP
17	01010-81225	BOLT	2	SN: 90415-UP
18	01643-31232	WASHER	2	SN: 90415-UP
19	21K-Z58-2881	PLATE	1	SN: 90415-UP
20	21K-Z58-3320	COLOR	3	SN: 90415-UP
21	01252-A1030	BOLT, WITH HEX SOCKET HOLE	3	SN: 90415-UP
22	01643-31032	WASHER	3	SN: 90415-UP
23	01643-31232	WASHER	1	SN: 90415-UP
24	01252-A1225	BOLT, WITH HEX SOCKET HOLE	1	SN: 90415-UP

Reference: T1620-001003

Open this exact parts catalogue on K-Part

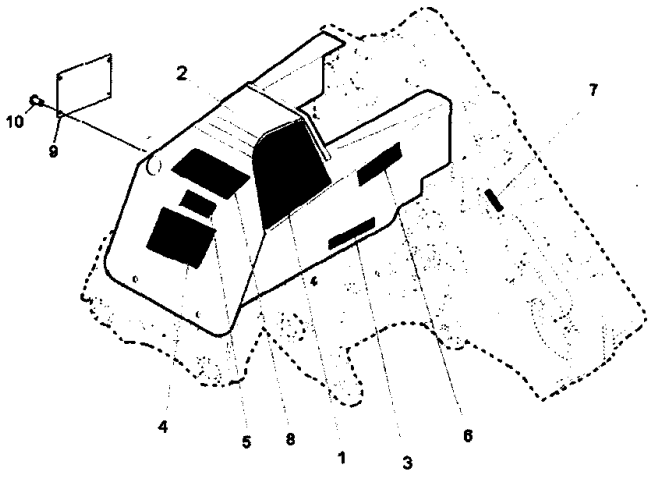

JA105781

Reference: T1620-001004

T001004 BASE, CAUTION DECAL (#90415-)

Item	Part No.	Part Name	Qty	Options
1	PZHH-5204911	DECAL, MODEL NAME	1	SN: 90415-UP
2	PZHH-5204804	DECAL, MODEL NAME	1	SN: 90415-UP
3	PZHH-5204904	DECAL, ECOOILER	2	SN: 90415-UP
4	PZHH-5269555	DECAL, READ OPERATION MANUAL	1	SN: 90415-UP
5	PZHH-DE00023	DECAL, READ OPERATION MANUAL	1	SN: 90415-UP
6	PZHH-5204790	DECAL, KOMATSU LOGO	2	SN: 90415-UP
7	PZHH-DE00500	DECAL, JD PATENT USE	1	SN: 90415-UP
8	21K-00-81550	PLATE, DANGER	1	SN: 90415-UP
9	09601-50000	PLATE, NAME (LIMITED SUPPLY)	1	SN: 90415-UP
10	04418-13060	SCREW	4	SN: 90415-UP

Reference: T1620-001004

Open this exact parts catalogue on K-Part

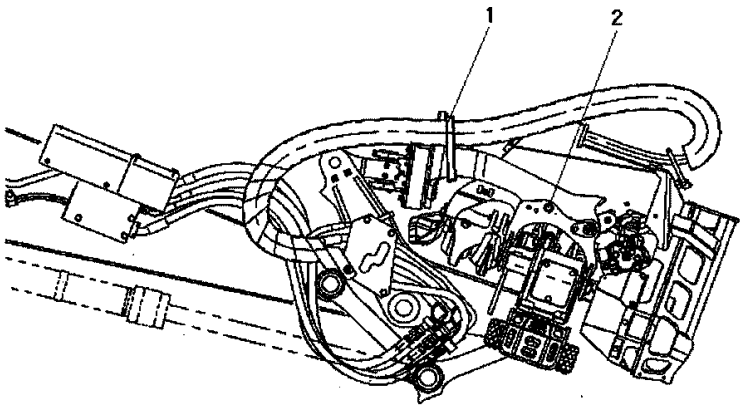

JA105782

Reference: T1620-001005

T001005 BASE, TRANSPORTATION(#90415-)

Item	Part No.	Part Name	Qty	Options
1	PZHH-5204819	BAND	1	SN: 90415-UP
2	01010-81640	BOLT	2	SN: 90415-UP

Reference: T1620-001005

Open this exact parts catalogue on K-Part

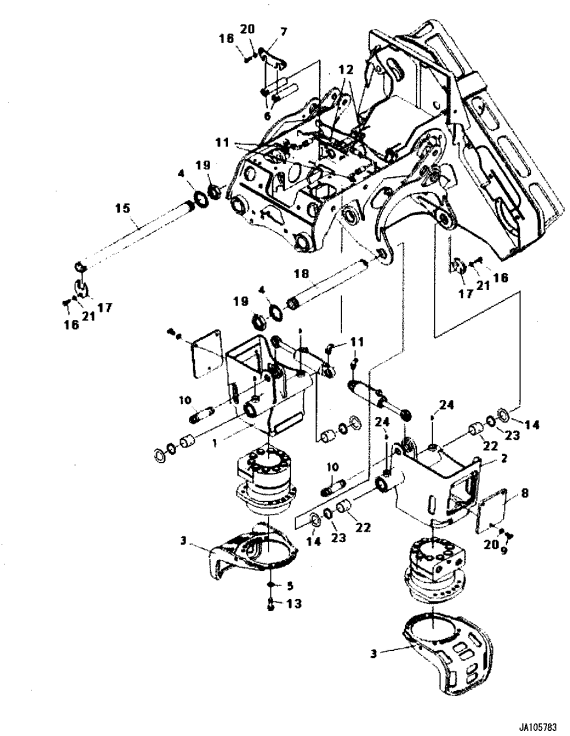

Reference: T1620-001006

T001006 BASE, FEED ROLLER SHAFT (#90415-)

Item	Part No.	Part Name	Qty	Options
1	21K-Z58-1213	COVER, LEFT, MOTOR	1	SN: 90415-UP
2	21K-Z58-1225	COVER, RIGHT, MOTOR	1	SN: 90415-UP
3	21K-Z58-1230	PROTECTOR	2	SN: 90415-UP
4	PZHH-5047165	WASHER	2	SN: 90415-UP
5	01643-51445	WASHER, FLAT	20	SN: 90415-UP
6	21K-Z58-1760	PIN	2	SN: 90415-UP
7	21K-Z58-1280	PLATE	1	SN: 90415-UP
8	21K-Z58-1420	PLATE	2	SN: 90415-UP
9	01010-81220	BOLT	6	SN: 90415-UP
10	PZHH-5077485	PIN	2	SN: 90415-UP
11	PZHH-5016294	FITTING	4	SN: 90415-UP
12	PZHH-5211121	HOSE	2	SN: 90415-UP
13	01010-81450	BOLT	20	SN: 90415-UP
14	PZHH-5061336	WASHER, THICKNESS=2.0MM	4	SN: 90415-UP
	PZHH-5064772	WASHER, THICKNESS=0.5MM	6	SN: 90415-UP
15	21K-Z58-1770	PIN	1	SN: 90415-UP
16	01010-81230	BOLT	4	SN: 90415-UP
17	21K-Z58-1521	PLATE	2	SN: 90415-UP
18	21K-Z58-1780	PIN	1	SN: 90415-UP
19	PZHH-5034681	NAT	2	SN: 90415-UP
20	01643-31232	WASHER	8	SN: 90415-UP
21	01643-31232	WASHER	2	SN: 90415-UP
22	PZHH-5061376	BUSH	4	SN: 90415-UP
23	PZHH-5061377	SCRAPER	4	SN: 90415-UP
24	07020-00000	FITTING, GREASE	4	SN: 90415-UP

Reference: T1620-001006

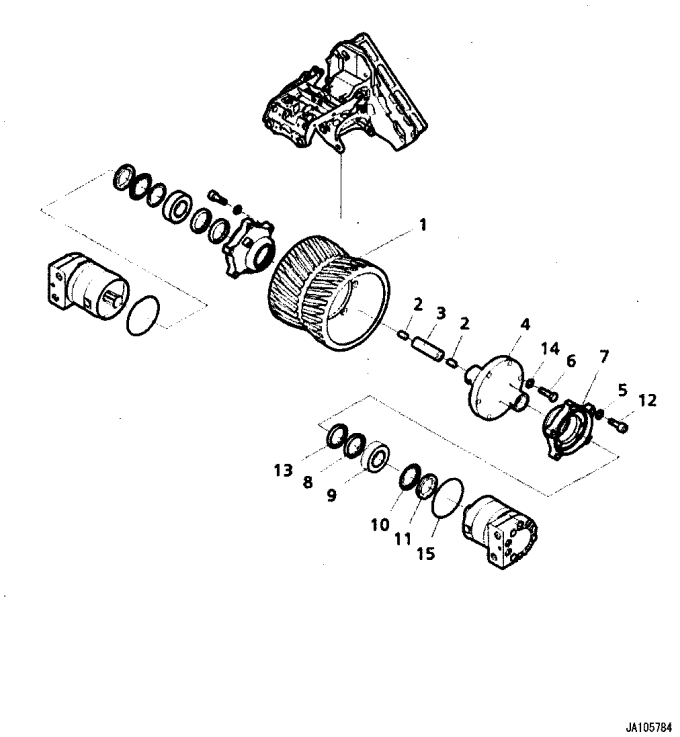

Reference: T1620-001007

T001007 BASE, FEED ROLLER CENTER (#90415-)

Item	Part No.	Part Name	Qty	Options
1	PZHH-5200808	ROLLER, FEED	1	SN: 90415-UP
2	PZHH-5061237	SPACER	2	SN: 90415-UP
3	PZHH-5061236	SPACER	1	SN: 90415-UP
4	PZHH-5292538	SHAFT	1	SN: 90415-UP
5	01643-51645	WASHER	10	SN: 90415-UP
6	01050-51435	BOLT	6	SN: 90415-UP
7	PZHH-5309383	BEARING	2	SN: 90415-UP
8	PZHH-5032258	SEAL	2	SN: 90415-UP
9	PZHH-5064259	BEARING	2	SN: 90415-UP
10	PZHH-907029	WASHER	2	SN: 90415-UP
11	PZHH-9610092	NAT	2	SN: 90415-UP
12	07372-21650	BOLT	10	SN: 90415-UP
13	PZHH-5032257	SEAL	2	SN: 90415-UP
14	PZHH-5064494	WASHER	6	SN: 90415-UP
15	PZHH-5061689	O-RING	2	SN: 90415-UP

Reference: T1620-001007

Open this exact parts catalogue on K-Part

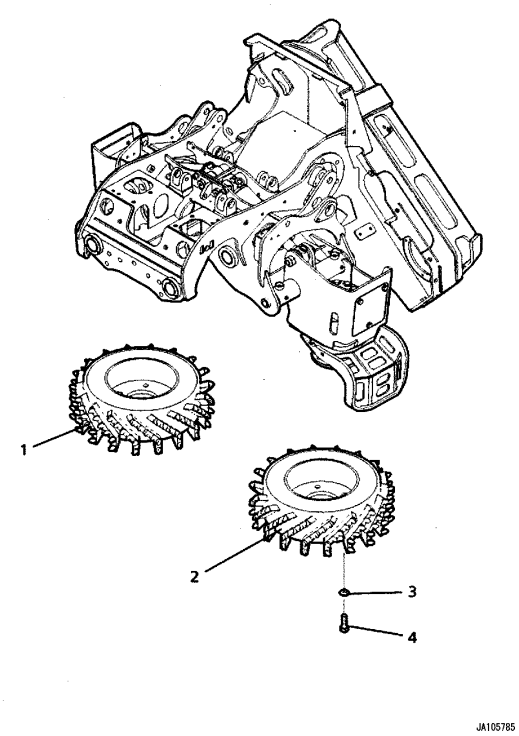

Reference: T1620-001008

T001008 BASE, FEED ROLLER VFR 5022 (#90415-)

Item	Part No.	Part Name	Qty	Options
1	PZHH-5083831	ROLLER, FEED	1	SN: 90415-UP
2	PZHH-5083830	ROLLER, FEED	1	SN: 90415-UP
3	PZHH-5064494	WASHER	10	SN: 90415-UP
4	01050-51430	BOLT	10	SN: 90415-UP

Reference: T1620-001008

Open this exact parts catalogue on K-Part

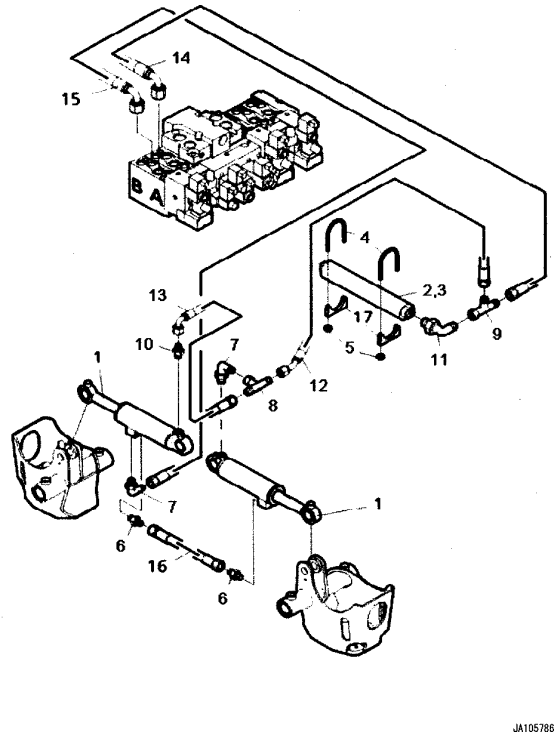

Reference: T1620-001009

T001009 BASE, FEED ROLLER CYLINDER PIPING(#90415-)

Item	Part No.	Part Name	Qty	Options
1	707-G0-00460	CYLINDER ASSEMBLY	2	SN: 90415-UP
2	PZHH-5050198	ACCUMULATOR	1	SN: 90415-UP
3	PZHH-5055064	GASKET KIT	1	SN: 90415-UP
4	PZHH-5065638	CLAMP	2	SN: 90415-UP
5	01594-00807	NUT, FLANGE TYPE	2	SN: 90415-UP
6	PZHH-5065399	COUPLING	2	SN: 90415-UP
7	PZHH-5065410	COUPLING	2	SN: 90415-UP
8	PZHH-5065415	COUPLING	1	SN: 90415-UP
9	PZHH-5074150	COUPLING	1	SN: 90415-UP
10	PZHH-5065407	COUPLING	1	SN: 90415-UP
11	PZHH-5065403	COUPLING	1	SN: 90415-UP
12	21K-Z58-2111	HOSE ASSEMBLY	1	SN: 90415-UP
13	21K-Z58-3350	HOSE ASSEMBLY	1	SN: 90415-UP
14	21K-Z58-2121	HOSE ASSEMBLY	1	SN: 90415-UP
15	21K-Z58-3150	HOSE ASSEMBLY	1	SN: 90415-UP
16	21K-Z58-2131	HOSE	1	SN: 90415-UP
17	PZHH-5245368	CLAMP	2	SN: 90415-UP

Reference: T1620-001009

Open this exact parts catalogue on K-Part

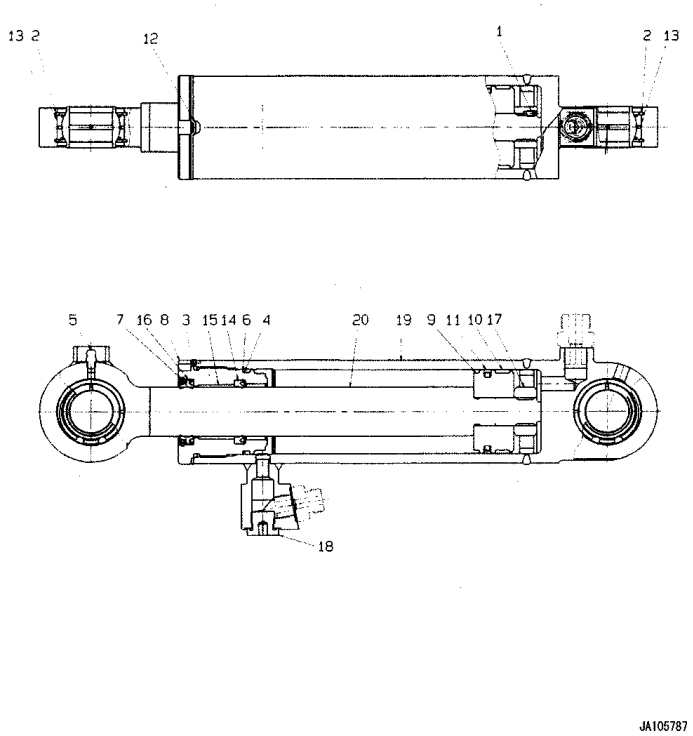

Reference: T1620-001010

T001010 BASE, FEED ROLLER CYLINDER (#90415-)

Item	Part No.	Part Name	Qty	Options
1	01310-20406	SCREW	1	SN: 90415-UP
2	04065-04718	RING, SNAP	4	SN: 90415-UP
3	07000-12060	O-RING	1	SN: 90415-UP
4	07000-B2055	O-RING	1	SN: 90415-UP
5	07020-00001	FITTING, GREASE	1	SN: 90415-UP
6	07146-02056	RING, BACK UP	1	SN: 90415-UP
7	07179-12047	RING, SNAP	1	SN: 90415-UP
8	707-29-60370	HEAD, CYLINDER	1	SN: 90415-UP
9	707-36-60980	PISTON	1	SN: 90415-UP
10	707-39-60190	RING, WEAR	1	SN: 90415-UP
11	707-44-60070	RING, PISTON	1	SN: 90415-UP
12	707-45-60020	WASHER, LOCK	1	SN: 90415-UP
13	707-46-03130	BUSH	2	SN: 90415-UP
14	707-51-35210	PACKING, ROD	1	SN: 90415-UP
15	707-52-15110	BUSH	1	SN: 90415-UP
16	707-56-35740	SEAL, DUST	1	SN: 90415-UP
17	707-67-20020	NAT	1	SN: 90415-UP
18	707-88-41140	PLUG	1	SN: 90415-UP
19	721-11-60380	CYLINDER	1	SN: 90415-UP
20	721-58-35730	ROD, PISTON	1	SN: 90415-UP

Reference: T1620-001010

Open this exact parts catalogue on K-Part

Get the complete PDF catalogue

Komatsu PC120-11 (JPN) 350.1 HARVESTER HEAD S/N 90415-UP (Japanese)

$89

with PayPal | Store cart: $99

Buy this PDF on Manuals Komatsu

Check the model, serial range and language before payment.

Download instructions are emailed after payment confirmation.

This free sample contains 10 catalogue pages.