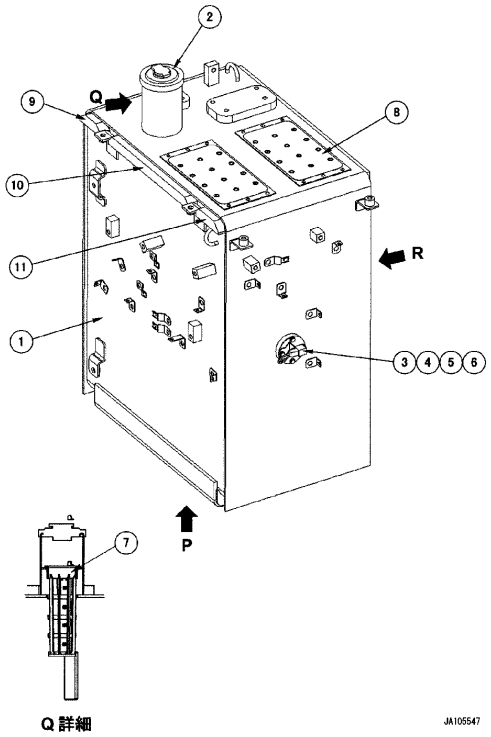

Reference: D0100-008001

D001001 FUEL TANK, (1/2)(#90415-)

Item	Part No.	Part Name	Qty	Options
1	2A3-04-11111	TANK	1	SN: 90415-UP
2	20Y-04-11162	CAP	1	SN: 90415-UP
3	2A5-06-11391	SENSOR, FUEL LEVEL	1	SN: 90415-UP
4	07000-13050	O-RING	1	SN: 90415-UP
5	01010-80612	BOLT	4	SN: 90415-UP
6	01643-30623	WASHER	4	SN: 90415-UP
7	22U-04-21241	STRAINER ASSEMBLY	1	SN: 90415-UP
8	203-00-11920	PLATE	2	SN: 90415-UP
9	2A3-958-1280	SHEET	1	SN: 90415-UP
10	2A3-958-1270	SHEET	1	SN: 90415-UP
11	2A3-958-1290	SHEET	1	SN: 90415-UP

Reference: D0100-008001

Open this exact parts catalogue on K-Part

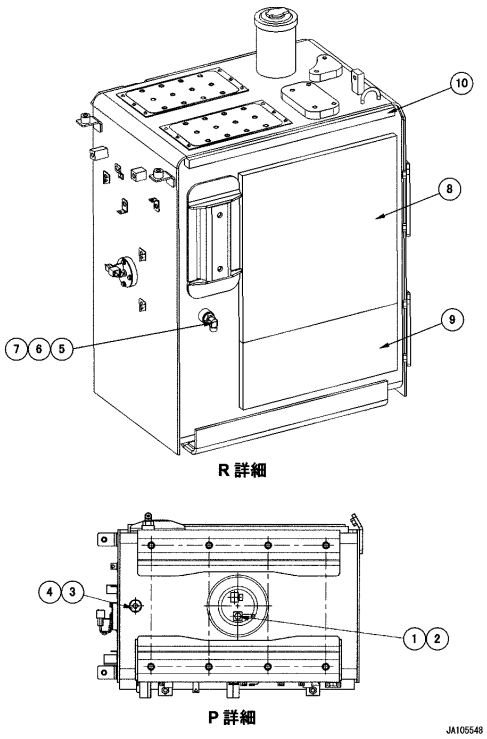

Reference: D0100-008002

D001002 FUEL TANK, (2/2)(#90415-)

Item	Part No.	Part Name	Qty	Options
1	07040-11007	PLUG	1	SN: 90415-UP
2	07002-11023	O-RING	1	SN: 90415-UP
3	07040-12412	PLUG	1	SN: 90415-UP
4	07002-12434	O-RING	1	SN: 90415-UP
5	02782-10315	ERBO	1	SN: 90415-UP
6	07002-12034	O-RING	1	SN: 90415-UP
7	02896-11009	O-RING	1	SN: 90415-UP
8	2A3-04-11182	SHEET	1	SN: 90415-UP
9	2A3-04-11280	SHEET	1	SN: 90415-UP
10	2A3-912-3771	SHEET	1	SN: 90415-UP

Reference: D0100-008002

Open this exact parts catalogue on K-Part

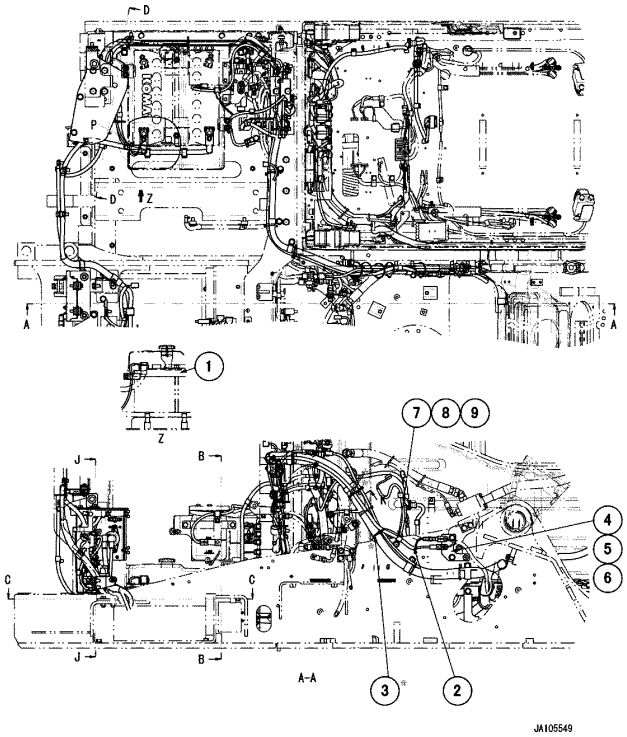

Reference: E0100-003001

E001001 BATTERY, (#90415-)

Item	Part No.	Part Name	Qty	Options
1	2A3-958-2850	BRACKET	1	SN: 90415-UP
2	2A3-958-2330	WIRING HARNESS	1	SN: 90415-UP
3	08034-20536	BAND	14	SN: 90415-UP
4	2A3-958-2321	BRACKET	1	SN: 90415-UP
5	01010-81235	BOLT	2	SN: 90415-UP
6	01643-31232	WASHER	2	SN: 90415-UP
7	04434-51412	CLIP	1	SN: 90415-UP
8	01010-81225	BOLT	1	SN: 90415-UP
9	01643-31232	WASHER	1	SN: 90415-UP

Reference: E0100-003001

Open this exact parts catalogue on K-Part

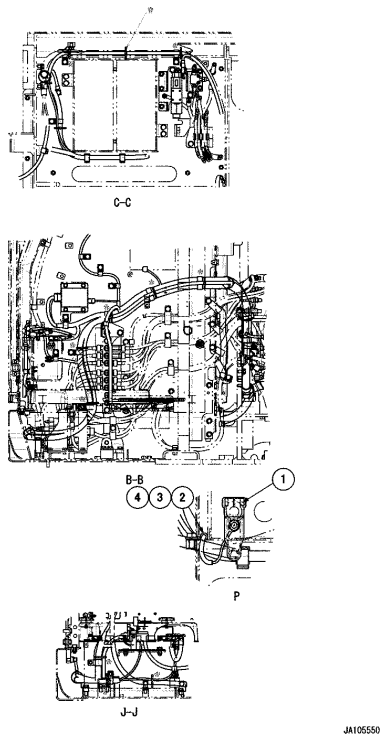

Reference: E0200-005001

E002001 ELECTRIC WIRING HARNESS, (1/2)(#90415-)

Item	Part No.	Part Name	Qty	Options
1	2A3-958-2670	CAP	1	SN: 90415-UP
2	04434-50810	CLIP	1	SN: 90415-UP
3	01010-81020	BOLT	1	SN: 90415-UP
4	01643-31032	WASHER	1	SN: 90415-UP

Reference: E0200-005001

Open this exact parts catalogue on K-Part

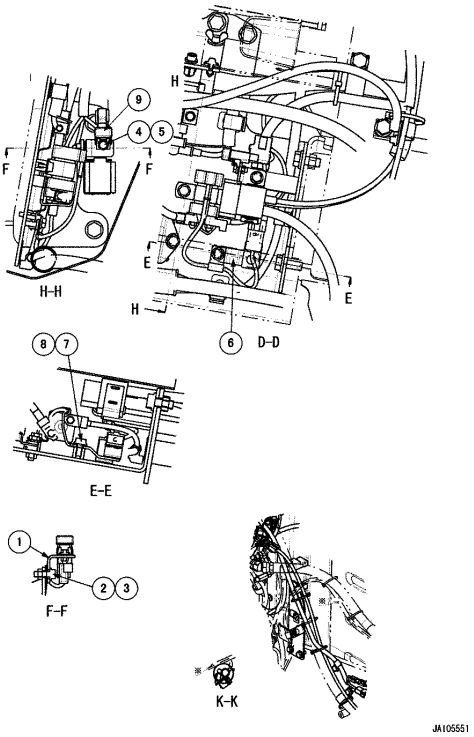

Reference: E0200-005002

E002002 ELECTRIC WIRING HARNESS, (2/2)(#90415-)

Item	Part No.	Part Name	Qty	Options
1	2A3-958-2590	BRACKET	1	SN: 90415-UP
2	01010-80825	BOLT	1	SN: 90415-UP
3	01643-30823	WASHER	1	SN: 90415-UP
4	01010-80616	BOLT	1	SN: 90415-UP
5	01643-30623	WASHER	1	SN: 90415-UP
6	2A3-958-2660	BRACKET	1	SN: 90415-UP
7	01010-80820	BOLT	1	SN: 90415-UP
8	01643-30823	WASHER	1	SN: 90415-UP
9	561-06-85710	FUSE ASSEMBLY, 15 AMPERE	1	SN: 90415-UP

Reference: E0200-005002

Open this exact parts catalogue on K-Part

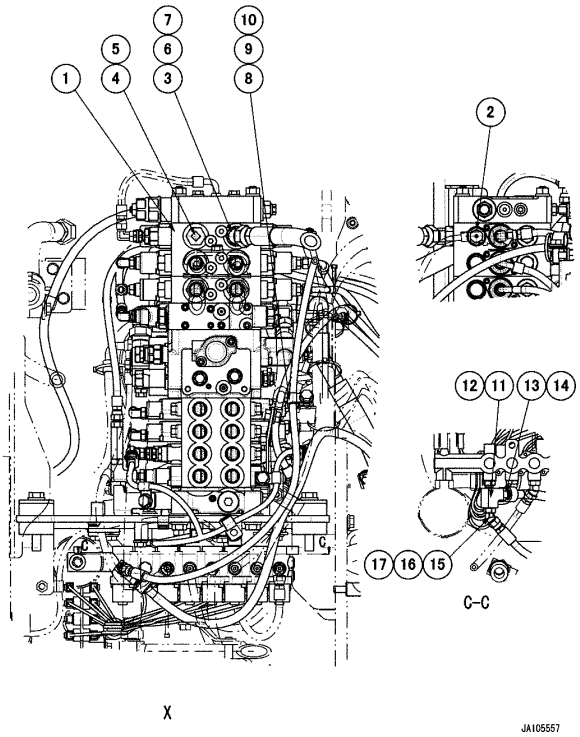

Reference: H0120-018001

H001001 CONTROL VALVE, (#90415-)

Item	Part No.	Part Name	Qty	Options
1	723-58-15900	VALVE ASSEMBLY, CONTROL, BLADE	1	SN: 90415-UP
	723-57-15800	VALVE ASSEMBLY, CONTROL	1	SN: 90415-UP
2	723-90-61400	VALVE ASSEMBLY, SUCTION RELIEF	1	SN: 90415-UP
3	02783-10628	ERBO	1	SN: 90415-UP
4	07040-12412	PLUG	1	SN: 90415-UP
5	07002-12434	O-RING	1	SN: 90415-UP
6	07002-62434	O-RING	1	SN: 90415-UP
7	02896-61018	O-RING	1	SN: 90415-UP
8	04434-51412	CLIP	1	SN: 90415-UP
9	01010-81225	BOLT	1	SN: 90415-UP
10	01643-31232	WASHER	1	SN: 90415-UP
11	207-62-61680	TEA	1	SN: 90415-UP
12	07002-11423	O-RING	1	SN: 90415-UP
13	20Y-62-16630	NIPPLE	1	SN: 90415-UP
14	07002-11423	O-RING	1	SN: 90415-UP
15	02783-10210	ERBO	1	SN: 90415-UP
16	07002-11423	O-RING	1	SN: 90415-UP
17	02896-11008	O-RING	1	SN: 90415-UP

Reference: H0120-018001

Open this exact parts catalogue on K-Part

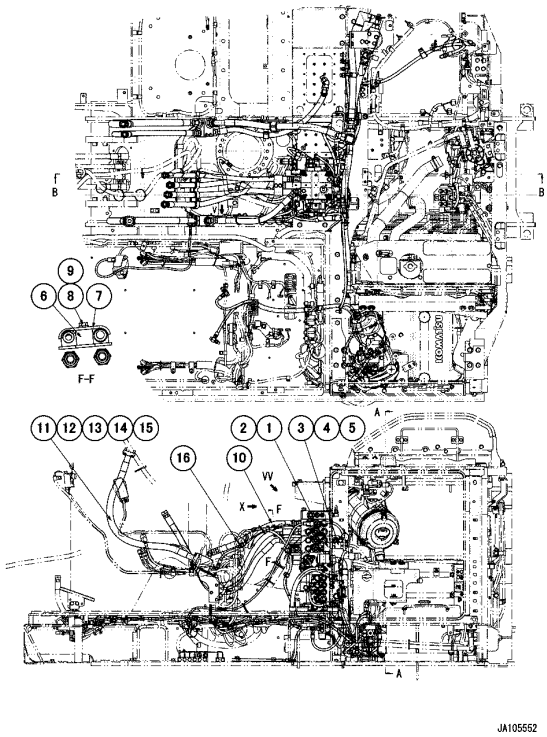

Reference: H0330-003001

H002001 RETURN PIPING, (#90415-)

Item	Part No.	Part Name	Qty	Options
1	11T-61-12211	ERBO	1	SN: 90415-UP
2	07002-12434	O-RING	1	SN: 90415-UP
3	23H-60-12120	ERBO	1	SN: 90415-UP
4	07002-12434	O-RING	1	SN: 90415-UP
5	02896-11018	O-RING	1	SN: 90415-UP
6	2A3-958-2710	BRACKET	1	SN: 90415-UP
7	2A3-62-13381	PLATE	1	SN: 90415-UP
8	01010-81025	BOLT	2	SN: 90415-UP
9	01643-31032	WASHER	2	SN: 90415-UP
10	2A3-958-1720	HOSE	1	SN: 90415-UP
11	07371-31049	FLANGE, SPLIT	4	SN: 90415-UP
12	07372-21035	BOLT	8	SN: 90415-UP
13	01643-51032	WASHER	8	SN: 90415-UP
14	07000-13032	O-RING	2	SN: 90415-UP
15	2A3-958-1710	HOSE	1	SN: 90415-UP
16	08034-20536	BAND	2	SN: 90415-UP

Reference: H0330-003001

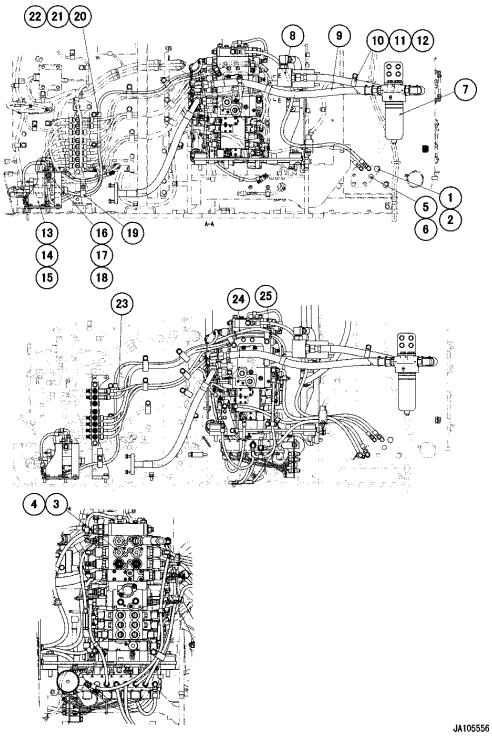

Reference: H1220-009001

H003001 ARM AND BUCKET PIPING, (#90415-)

Item	Part No.	Part Name	Qty	Options
1	07040-11812	PLUG	1	SN: 90415-UP
2	07002-11823	O-RING	1	SN: 90415-UP
3	07040-12412	PLUG	2	SN: 90415-UP
4	07002-62434	O-RING	2	SN: 90415-UP
5	07040-11409	PLUG	1	SN: 90415-UP
6	07002-11423	O-RING	1	SN: 90415-UP
7	22B-973-3301	FILTER ASSEMBLY	1	SN: 90415-UP
8	2A3-958-1820	BLOCK	1	SN: 90415-UP
9	2A3-958-1760	HOSE	1	SN: 90415-UP
10	281-01-13180	CLIP	1	SN: 90415-UP
11	01010-81230	BOLT	1	SN: 90415-UP
12	01643-31232	WASHER	1	SN: 90415-UP
13	2A3-958-2440	BRACKET	1	SN: 90415-UP
14	01010-81020	BOLT	5	SN: 90415-UP
15	01643-31032	WASHER	5	SN: 90415-UP
16	02782-10210	ERBO	1	SN: 90415-UP
17	07002-11423	O-RING	1	SN: 90415-UP
18	02896-11008	O-RING	1	SN: 90415-UP
19	04434-52711	CLIP	1	SN: 90415-UP
20	04434-51412	CLIP, STORAGE BRACKET	2	SN: 90415-UP
21	01010-81225	BOLT, STORAGE BRACKET	2	SN: 90415-UP
22	01643-31232	WASHER, STORAGE BRACKET	2	SN: 90415-UP
23	2A3-958-2890	HOSE ASSEMBLY, BLADE, DEDICATED ARM	1	SN: 90415-UP
	2A3-958-2880	HOSE ASSEMBLY, DEDICATED ARM	1	SN: 90415-UP
24	22B-62-19830	HOSE, DEDICATED ARM	1	SN: 90415-UP
25	08034-20519	BAND, DEDICATED ARM	2	SN: 90415-UP

Reference: H1220-009001

Open this exact parts catalogue on K-Part

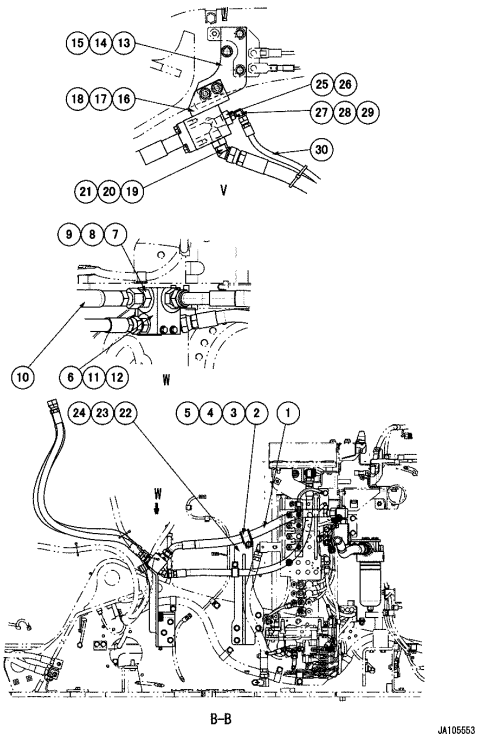

Reference: H1270-017001

H004001 ACTUATOR PIPING, (1/3)(#90415-)

Item	Part No.	Part Name	Qty	Options
1	2A3-958-1740	HOSE	1	SN: 90415-UP
2	198-61-44210	CLAMP	2	SN: 90415-UP
3	21T-62-76840	CUSHION	1	SN: 90415-UP
4	01010-81285	BOLT	1	SN: 90415-UP
5	01643-31232	WASHER	1	SN: 90415-UP
6	2A3-958-2810	BLOCK	1	SN: 90415-UP
7	207-62-72110	UNION	2	SN: 90415-UP
8	07002-63334	O-RING	2	SN: 90415-UP
9	207-62-64740	O-RING	2	SN: 90415-UP
10	2A3-958-1730	HOSE	1	SN: 90415-UP
11	01010-80816	BOLT	2	SN: 90415-UP
12	01643-30823	WASHER	2	SN: 90415-UP
13	2A3-958-1780	BRACKET	1	SN: 90415-UP
14	01010-81230	BOLT	1	SN: 90415-UP
15	01643-31232	WASHER	1	SN: 90415-UP
16	2A3-958-1770	BLOCK	1	SN: 90415-UP
17	01010-81225	BOLT	2	SN: 90415-UP
18	01643-31232	WASHER	2	SN: 90415-UP
19	02783-10628	ERBO	1	SN: 90415-UP
20	07002-62434	O-RING	1	SN: 90415-UP
21	02896-61018	O-RING	1	SN: 90415-UP
22	2A3-958-1810	BRACKET	1	SN: 90415-UP
23	01010-81230	BOLT	4	SN: 90415-UP
24	01643-31232	WASHER	4	SN: 90415-UP
25	205-62-52390	ADAPTER	1	SN: 90415-UP
26	07002-62434	O-RING	1	SN: 90415-UP
27	203-Z58-3180	VALVE ASSEMBLY	1	SN: 90415-UP
28	07002-61423	O-RING	1	SN: 90415-UP
29	02896-61008	O-RING	1	SN: 90415-UP
30	2A3-958-2410	HOSE ASSEMBLY	1	SN: 90415-UP

Reference: H1270-017001

Open this exact parts catalogue on K-Part

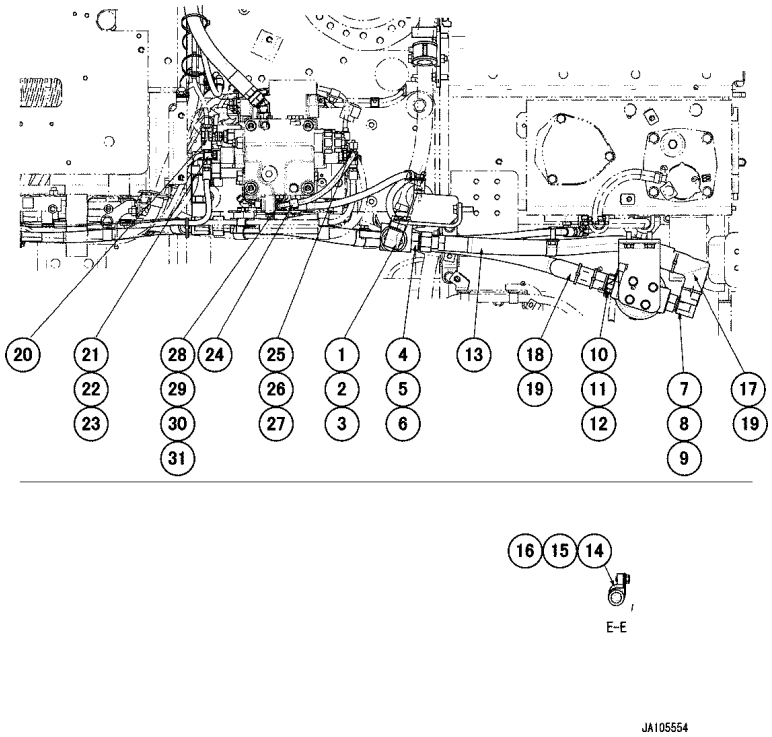

Reference: H1270-017002

H004002 ACTUATOR PIPING, (2/3)(#90415-)

Item	Part No.	Part Name	Qty	Options
1	21W-62-42640	ERBO	1	SN: 90415-UP
2	07002-13334	O-RING	1	SN: 90415-UP
3	207-62-64740	O-RING	1	SN: 90415-UP
4	207-62-72110	UNION	1	SN: 90415-UP
5	07002-13334	O-RING	1	SN: 90415-UP
6	207-62-64740	O-RING	1	SN: 90415-UP
7	21W-62-42640	ERBO	1	SN: 90415-UP
8	07002-13334	O-RING	1	SN: 90415-UP
9	207-62-64740	O-RING	1	SN: 90415-UP
10	207-62-72110	UNION	1	SN: 90415-UP
11	07002-13334	O-RING	1	SN: 90415-UP
12	207-62-64740	O-RING	1	SN: 90415-UP
13	2A3-958-1750	HOSE	1	SN: 90415-UP
14	281-01-13180	CLIP	1	SN: 90415-UP
15	01010-81025	BOLT	1	SN: 90415-UP
16	01643-31032	WASHER	1	SN: 90415-UP
17	6275-51-5870	COVER	1	SN: 90415-UP
18	6208-51-5890	COVER	1	SN: 90415-UP
19	08034-20519	BAND	4	SN: 90415-UP
20	206-06-61130	SWITCH, PRESSER	1	SN: 90415-UP
21	22B-62-17450	ERBO	1	SN: 90415-UP
22	07002-11423	O-RING	1	SN: 90415-UP
23	02896-11008	O-RING	1	SN: 90415-UP
24	02775-00203	HOSE	1	SN: 90415-UP
25	02782-10210	ERBO	1	SN: 90415-UP
26	07002-11423	O-RING	1	SN: 90415-UP
27	02896-11008	O-RING	1	SN: 90415-UP
28	20Y-62-87510	TEA	1	SN: 90415-UP
29	07002-11423	O-RING	1	SN: 90415-UP
30	02896-11008	O-RING	1	SN: 90415-UP
31	02896-11009	O-RING	1	SN: 90415-UP

Reference: H1270-017002

Open this exact parts catalogue on K-Part

Get the complete PDF catalogue

Komatsu PC120-11 (JPN) HARVESTER 350.1 MOUNTED SPEC S/N 90415-UP (Japanese)

$89

with PayPal | Store cart: $99

Buy this PDF on Manuals Komatsu

Check the model, serial range and language before payment.

Download instructions are emailed after payment confirmation.

This free sample contains 10 catalogue pages.