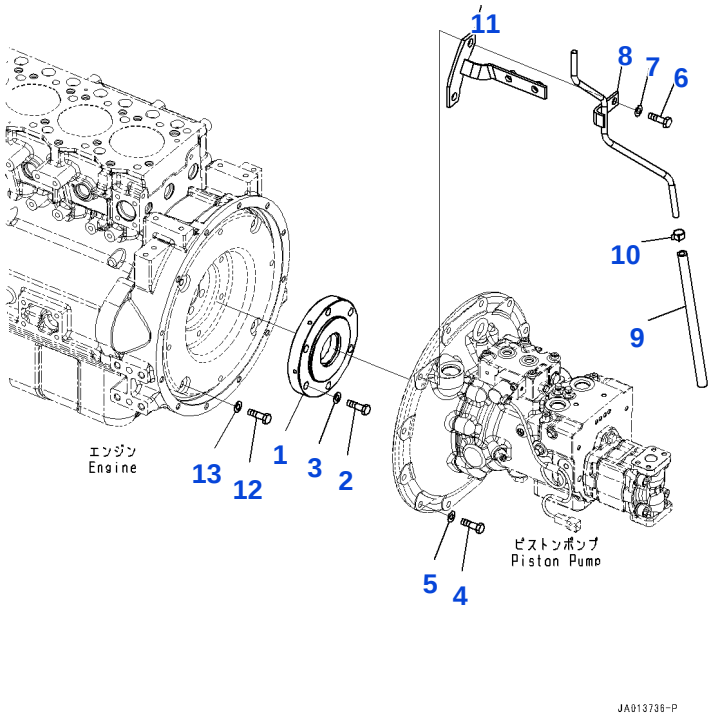

Reference: A9999-501001

B001001 ENGINE RELATED PARTS, (#1501-1570)

Item	Part No.	Part Name	Qty	Options
1	708-3T-12260	COUPLING	1	SN: 1501-1570
2	01010-81245	BOLT	6	SN: 1501-1570
3	01643-31232	WASHER	6	SN: 1501-1570
4	01010-81030	BOLT	10	SN: 1501-1570
5	01643-31032	WASHER	10	SN: 1501-1570
6	01010-81040	BOLT	2	SN: 1501-1570
7	01643-31032	WASHER	2	SN: 1501-1570
8	22P-01-21110	TUBE	1	SN: 1501-1570
9	07260-20928	HOSE	1	SN: 1501-1570
10	07285-00150	CLIP	1	SN: 1501-1570
11	22P-01-21181	BRACKET	1	SN: 1501-1570
12	01010-81225	BOLT	4	SN: 1501-1570
13	01643-31232	WASHER	4	SN: 1501-1570

Reference: A9999-501001

Open this exact parts catalogue on K-Part

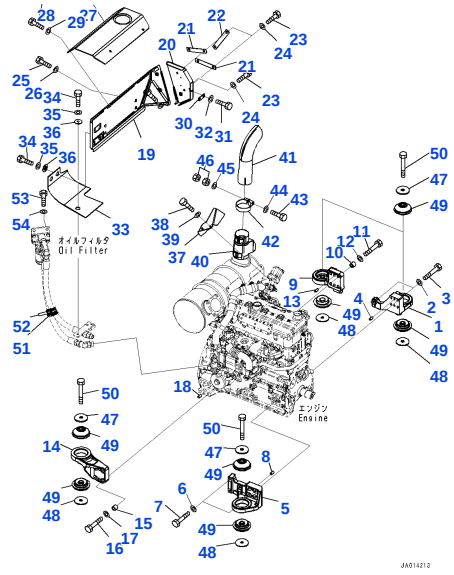

Reference: B0100-001001

B002001 ENGINE INSTALLATION, (#1501-)

Item	Part No.	Part Name	Qty	Options
1	22P-01-21950	BRACKET	1	SN: 1501-UP
2	01643-31032	WASHER	5	SN: 1501-UP
3	22B-01-21190	BOLT	5	SN: 1501-UP
4	04020-01024	PIN, DOWEL	2	SN: 1501-UP
5	22P-01-21940	BRACKET	1	SN: 1501-UP
6	01643-31032	WASHER	6	SN: 1501-UP
7	22B-01-21190	BOLT	6	SN: 1501-UP
8	04020-01024	PIN, DOWEL	2	SN: 1501-UP
9	22P-01-21960	BRACKET	1	SN: 1501-UP
10	6144-81-6580	SPACER	4	SN: 1501-UP
11	2A5-01-11230	BOLT	4	SN: 1501-UP
12	01643-31232	WASHER	4	SN: 1501-UP
13	04020-01228	PIN, DOWEL	2	SN: 1501-UP
14	22P-01-21511	BRACKET	1	SN: 1501-UP
15	6144-81-6580	SPACER	4	SN: 1501-UP
16	2A5-01-11230	BOLT	4	SN: 1501-UP
17	01643-31232	WASHER	4	SN: 1501-UP
18	04020-01228	PIN, DOWEL	2	SN: 1501-UP
19	22P-01-21140	COVER	1	SN: 1501-UP
20	22P-01-21171	COVER	1	SN: 1501-UP
21	22P-01-21690	PLATE	2	SN: 1501-UP
22	22P-01-21560	PLATE	1	SN: 1501-UP
23	01010-80820	BOLT	5	SN: 1501-UP
24	01643-30823	WASHER	5	SN: 1501-UP
25	01010-81225	BOLT	4	SN: 1501-UP
26	01643-31232	WASHER	4	SN: 1501-UP
27	22P-01-21151	COVER	1	SN: 1501-UP
28	01010-80820	BOLT	4	SN: 1501-UP
29	01643-30823	WASHER	4	SN: 1501-UP
30	22P-01-22110	PLATE	1	SN: 1501-UP
31	01010-80820	BOLT	2	SN: 1501-UP
32	01643-30823	WASHER	2	SN: 1501-UP
33	22P-01-21210	SEAT	1	SN: 1501-UP
34	01010-81025	BOLT	3	SN: 1501-UP
35	01643-31032	WASHER	3	SN: 1501-UP
36	203-54-56960	COLLAR	3	SN: 1501-UP
37	22P-01-21830	COVER	1	SN: 1501-UP
38	01010-80820	BOLT	3	SN: 1501-UP
39	01643-30823	WASHER	3	SN: 1501-UP
40	22P-01-21920	COVER	1	SN: 1501-UP
41	6275-11-5390	PIPE	1	SN: 1501-UP
42	6275-11-5130	CLAMP	1	SN: 1501-UP
43	01010-81085	BOLT	1	SN: 1501-UP
44	01643-31032	WASHER	1	SN: 1501-UP
45	01643-31032	WASHER	1	SN: 1501-UP
46	01580-11008	NUT	2	SN: 1501-UP
47	113-01-21120	WASHER	4	SN: 1501-UP

Open this exact parts catalogue on K-Part

Item	Part No.	Part Name	Qty	Options
48	203-01-67540	WASHER	4	SN: 1501-UP
49	21K-01-41711	CUSHION	8	SN: 1501-UP
50	01011-81630	BOLT	4	SN: 1501-UP
51	07095-40627	CUSHION	2	SN: 1501-UP
52	08034-20519	BAND	4	SN: 1501-UP
53	01010-81230	BOLT	2	SN: 1501-UP
54	01643-31232	WASHER	2	SN: 1501-UP

Reference: B0100-001001

Open this exact parts catalogue on K-Part

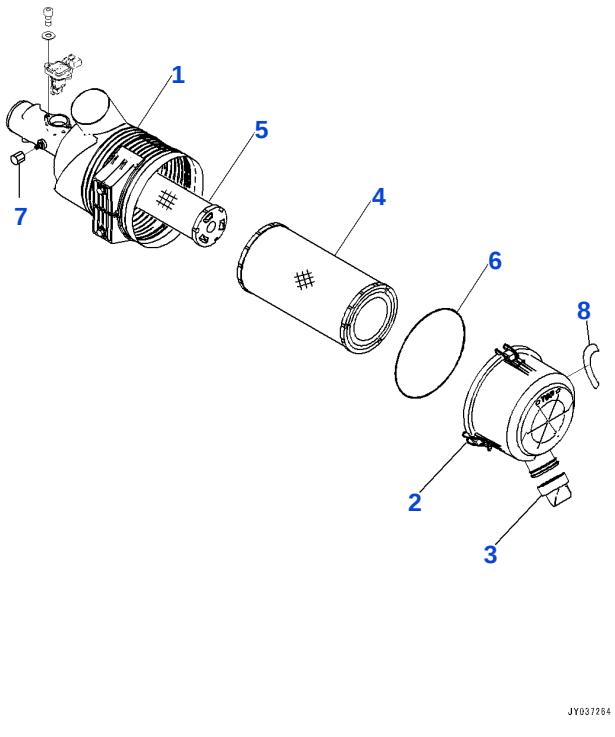

Reference: B0200-001001

B003001 AIR CLEANER, COMPONENTS(#1501-)

Item	Part No.	Part Name	Qty	Options
1	6275-81-7700	AIR CLEANER	1	SN: 1501-UP
2	600-184-1160	• COVER ASSEMBLY	1	SN: 1501-UP
3	600-184-1350	• • VALVE, VACUATOR	1	SN: 1501-UP
	600-185-2200	• ELEMENT ASSEMBLY	1	SN: 1501-UP
4	600-185-2210	• • ELEMENT, OUTER	1	SN: 1501-UP
5		• • ELEMENT, INNER	1	SN: 1501-UP
6	600-185-2230	• • O-RING	1	SN: 1501-UP
7	561-02-12420	• CAP	1	SN: 1501-UP
8	600-181-1920	• PLATE, OPERATION AND MAINTENANCE MANUAL, AIR CLEANER	1	SN: 1501-UP
		[C1]-PARTS WITH THIS SYMBOL CANNOT BE SUPPLIED INDIVIDUALLY. THEY ARE SUPPLIED AS ASSEMBLIES.		SN: UP

Reference: B0200-001001

Open this exact parts catalogue on K-Part

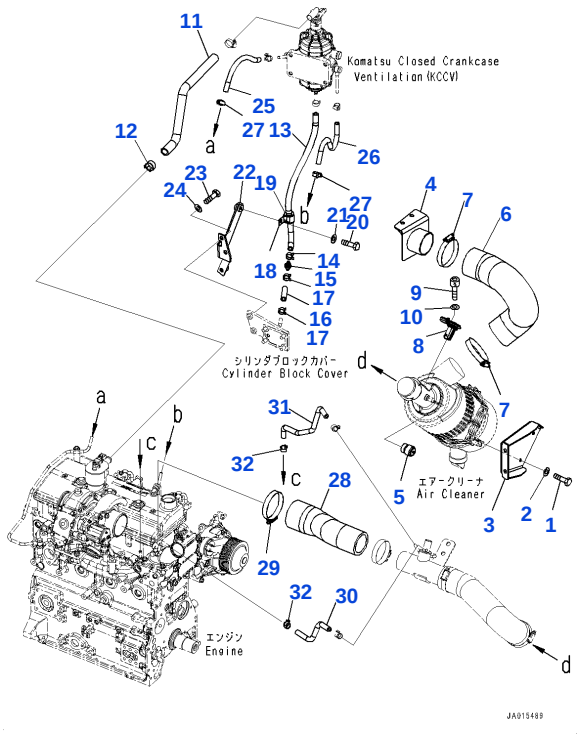

Reference: B0200-001002

B003002 AIR CLEANER, INSTALLATION (#1501-)

Item	Part No.	Part Name	Qty	Options
1	01010-80820	BOLT	2	SN: 1501-UP
2	01643-30823	WASHER	2	SN: 1501-UP
3	22P-01-21250	BRACKET	1	SN: 1501-UP
4	22P-01-21241	SCREEN	1	SN: 1501-UP
5	08670-12001	INDICATOR, DUST	1	SN: 1501-UP
6	22P-01-21231	HOSE	1	SN: 1501-UP
7	07289-00095	CLAMP	2	SN: 1501-UP
8	6252-81-7800	SENSOR AIRFLOW	1	SN: 1570-UP
	6252-81-7900	SENSOR AIRFLOW	1	SN: 1501-1569
	6252-81-7910	• O-RING	1	SN: 1501-1569
9	01252-B0410	BOLT, HEXAGON SOCKET HEAD	2	SN: 1501-UP
10	01640-20408	WASHER	2	SN: 1501-UP
11	22P-01-21310	HOSE	1	SN: 1501-UP
12	07281-10259	CLAMP, HOSE	1	SN: 1501-UP
13	22P-01-21351	HOSE	1	SN: 1501-UP
14	11Y-09-11140	CLIP	1	SN: 1501-UP
15	6261-51-2810	VALVE, CHECK	1	SN: 1501-UP
16	6262-21-7810	HOSE	1	SN: 1501-UP
17	11Y-09-11140	CLIP	2	SN: 1501-UP
18	04434-52310	CLIP	1	SN: 1501-UP
19	2A5-01-11580	CUSHION	1	SN: 1501-UP
20	01010-81020	BOLT	1	SN: 1501-UP
21	01643-31032	WASHER	1	SN: 1501-UP
22	22P-01-21361	BRACKET	1	SN: 1501-UP
23	01010-81025	BOLT	2	SN: 1501-UP
24	01643-31032	WASHER	2	SN: 1501-UP
25	22P-01-21750	HOSE	1	SN: 1501-UP
26	22P-01-21551	HOSE	1	SN: 1501-UP
27	07281-00167	CLAMP	2	SN: 1501-UP
28	22P-01-21281	HOSE	1	SN: 1501-UP
29	07289-00095	CLAMP	1	SN: 1501-UP
30	22P-01-21910	HOSE	1	SN: 1501-UP
31	22P-01-21890	HOSE	1	SN: 1501-UP
32	07281-00167	CLAMP	2	SN: 1501-UP

Open this exact parts catalogue on K-Part

Item	Part No.	Part Name	Qty	Options
		[A2]-INSTEAD OF PARTS WITH THIS SYMBOL, THE PARTS LISTED IN THE ROW ABOVE CAN BE USED.		SN: UP

Reference: B0200-001002

Open this exact parts catalogue on K-Part

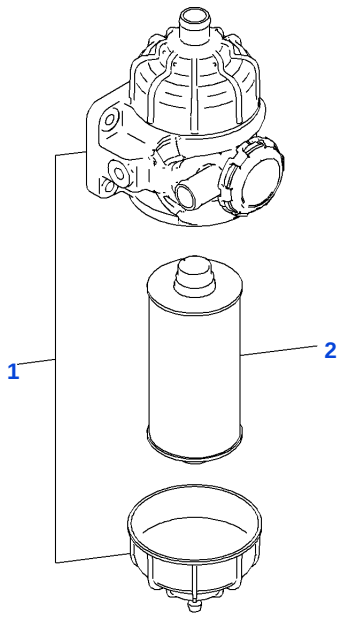

Reference: B0200-001003

B003003 AIR CLEANER, VENTILATION DEVICE(#1501-)

Item	Part No.	Part Name	Qty	Options
1	600-333-3410	VENTILATOR	1	SN: 1501-UP
2	600-333-3900	• ELEMENT KIT	1	SN: 1501-UP

Reference: B0200-001003

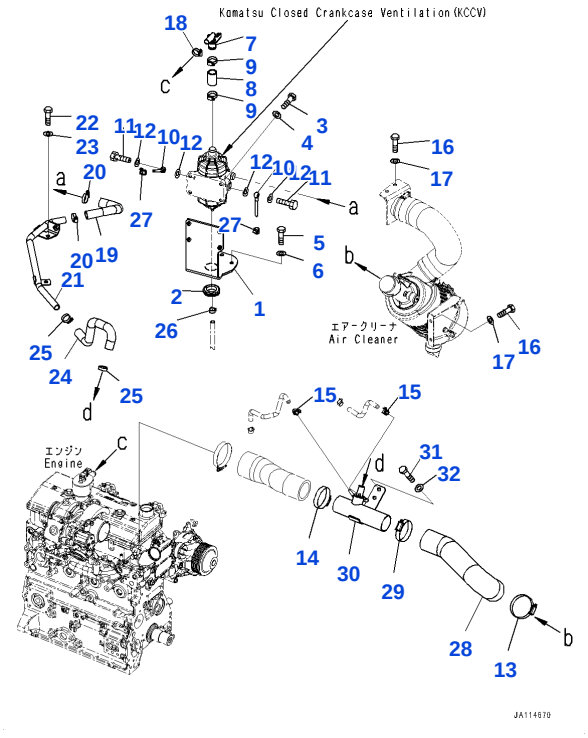

Reference: B0200-001004

B003004 AIR CLEANER, RELATED PARTS (#1501-)

Item	Part No.	Part Name	Qty	Options
1	22P-01-21291	BRACKET	1	SN: 1501-UP
2	08037-03614	GROMMET	1	SN: 1501-UP
3	01010-80835	BOLT	4	SN: 1501-UP
4	01643-30823	WASHER	4	SN: 1501-UP
5	01010-81025	BOLT	3	SN: 1501-UP
6	01643-31032	WASHER	3	SN: 1501-UP
7	6275-21-9650	CONNECTOR ASSEMBLY	1	SN: 1501-UP
	07000-E2018	• O-RING	1	SN: 1501-UP
8	6275-21-9680	HOSE	1	SN: 1501-UP
9	22B-01-31260	CLAMP	2	SN: 1501-UP
10	22P-01-21531	JOINT	2	SN: 1501-UP
11	07206-30812	BOLT, JOINT	2	SN: 1501-UP
12	07005-01212	SEAL, WASHER	4	SN: 1501-UP
13	07289-00080	CLAMP	1	SN: 1501-UP
14	22P-01-22120	CLAMP	1	SN: 1501-UP
15	07281-00167	CLAMP	2	SN: 1501-UP
16	01010-81025	BOLT	4	SN: 1501-UP
17	01643-31032	WASHER	4	SN: 1501-UP
18	22B-01-31260	CLAMP	1	SN: 1501-UP
19	22P-01-21321	HOSE	1	SN: 1501-UP
20	22B-01-31260	CLAMP	2	SN: 1501-UP
21	22P-01-21331	TUBE	1	SN: 1501-UP
22	01010-81020	BOLT	2	SN: 1501-UP
23	01643-31032	WASHER	2	SN: 1501-UP
24	22P-01-21341	HOSE	1	SN: 1501-UP
25	22B-01-31260	CLAMP	2	SN: 1501-UP
26	11Y-09-11140	CLIP	1	SN: 1501-UP
27	07281-00167	CLAMP	2	SN: 1501-UP
28	22P-01-21390	HOSE	1	SN: 1501-UP
29	07289-00080	CLAMP	1	SN: 1501-UP
30	22P-01-21271	TUBE	1	SN: 1501-UP
31	01010-81025	BOLT	2	SN: 1501-UP
32	01643-31032	WASHER	2	SN: 1501-UP

Open this exact parts catalogue on K-Part

Open this exact parts catalogue on K-Part

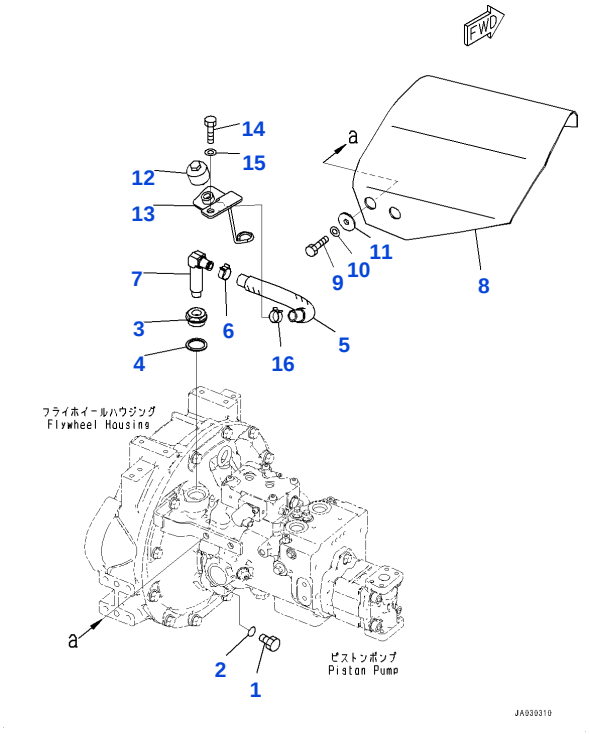

Reference: B0600-001001

B004001 DAMPER, (#1501-)

Item	Part No.	Part Name	Qty	Options
1	07040-11209	PLUG	1	SN: 1501-UP
2	07002-11223	O-RING	1	SN: 1501-UP
3	21W-01-21150	NIPPLE	1	SN: 1501-UP
4	07005-03016	SEAL, WASHER	1	SN: 1501-UP
5	22P-01-21370	HOSE	1	SN: 1501-UP
6	07285-00200	CLIP, HOSE	1	SN: 1501-UP
7	21W-01-42190	ELBOW	1	SN: 1501-UP
8	22P-01-21381	SEAT	1	SN: 1501-UP
9	01010-81030	BOLT	2	SN: 1501-UP
10	01643-31032	WASHER	2	SN: 1501-UP
11	203-54-56960	COLLAR	2	SN: 1501-UP
12	07030-00252	BREATHER	1	SN: 1501-UP
13	22P-01-21191	JOINT	1	SN: 1501-UP
14	01010-81020	BOLT	1	SN: 1501-UP
15	01643-31032	WASHER	1	SN: 1501-UP
16	07285-00200	CLIP, HOSE	1	SN: 1501-UP

Reference: B0600-001001

Get the complete PDF catalogue

Komatsu PC78UUT-10 (JPN) S/N 1501-1699 (Japanese)

$89

with PayPal | Store cart: $99

Buy this PDF on Manuals Komatsu

Check the model, serial range and language before payment.

Download instructions are emailed after payment confirmation.

This free sample contains 10 catalogue pages.