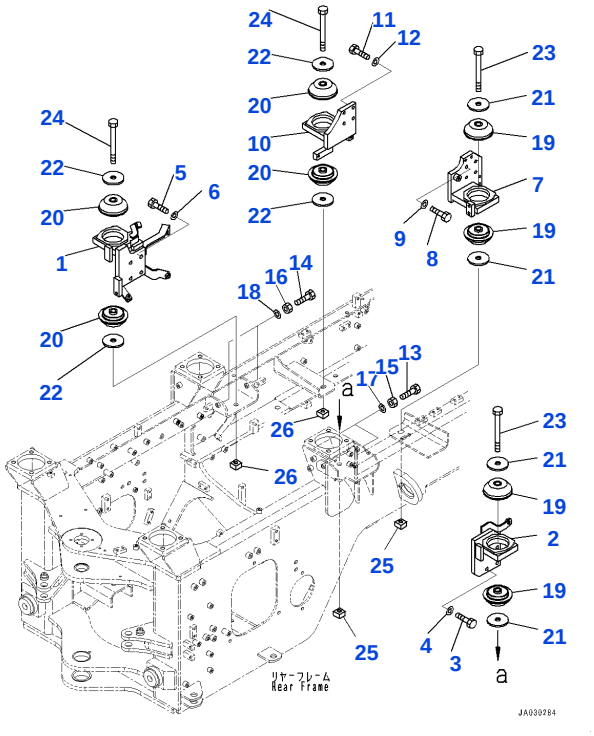

Reference: B0100-001001

B001001 ENGINE MOUNTING (#90001-100999)

Item	Part No.	Part Name	Qty	Options
1	416-01-61221	BRACKET	1	SN: 90001-100999
2	416-01-61211	BRACKET	1	SN: 90001-100999
3	01010-81240	BOLT	4	SN: 90001-100999
4	01643-31232	WASHER	4	SN: 90001-100999
5	01010-81240	BOLT	4	SN: 90001-100999
6	01643-31232	WASHER	4	SN: 90001-100999
7	416-01-51261	BRACKET	1	SN: 90001-100999
8	01010-81035	BOLT	4	SN: 90001-100999
9	01643-31032	WASHER	4	SN: 90001-100999
10	416-01-61240	BRACKET	1	SN: 90001-100999
11	01010-81035	BOLT	4	SN: 90001-100999
12	01643-31032	WASHER	4	SN: 90001-100999
13	01016-51270	BOLT	2	SN: 90001-100999
14	01016-51270	BOLT	2	SN: 90001-100999
15	01580-11210	NUT	2	SN: 90001-100999
16	01580-11210	NUT	2	SN: 90001-100999
17	01643-31232	WASHER	2	SN: 90001-100999
18	01643-31232	WASHER	2	SN: 90001-100999
19	416-01-61180	CUSHION	4	SN: 90001-100999
20	417-01-41120	CUSHION	4	SN: 90001-100999
21	418-01-41180	PLATE	4	SN: 90001-100999
22	418-01-41180	PLATE	4	SN: 90001-100999
23	01011-61640	BOLT	2	SN: 90001-100999
24	01011-61640	BOLT	2	SN: 90001-100999
25	416-01-51250	SEAT	2	SN: 90001-100999
26	416-01-51250	SEAT	2	SN: 90001-100999

Reference: B0100-001001

Open this exact parts catalogue on K-Part

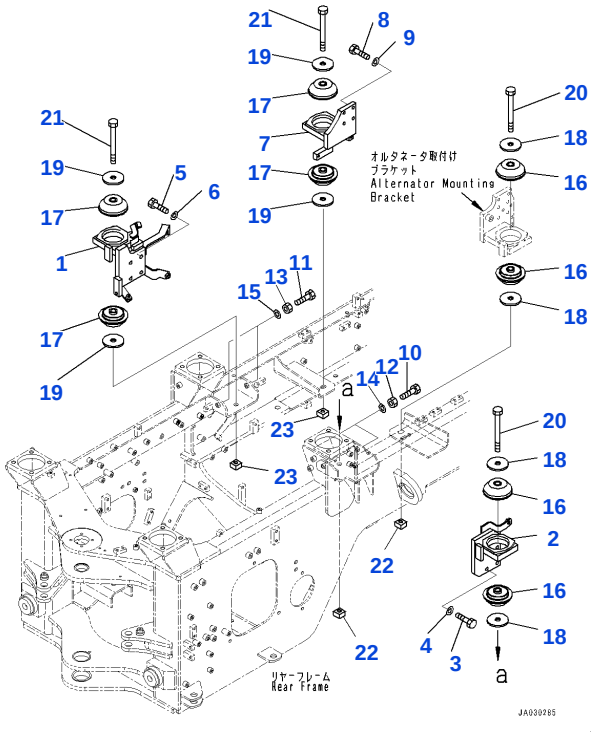

Reference: B0100-002001

B002001 ENGINE MOUNTING, (WITH 140 AMP ALTERNATOR) (#90001-)

Item	Part No.	Part Name	Qty	Options
1	416-01-61221	BRACKET	1	SN: 90001-UP
2	416-01-61211	BRACKET	1	SN: 90001-UP
3	01010-81240	BOLT	4	SN: 90001-UP
4	01643-31232	WASHER	4	SN: 90001-UP
5	01010-81240	BOLT	4	SN: 90001-UP
6	01643-31232	WASHER	4	SN: 90001-UP
7	416-01-61240	BRACKET	1	SN: 90001-UP
8	01010-81035	BOLT	4	SN: 90001-UP
9	01643-31032	WASHER	4	SN: 90001-UP
10	01016-51270	BOLT	2	SN: 90001-UP
11	01016-51270	BOLT	2	SN: 90001-UP
12	01580-11210	NUT	2	SN: 90001-UP
13	01580-11210	NUT	2	SN: 90001-UP
14	01643-31232	WASHER	2	SN: 90001-UP
15	01643-31232	WASHER	2	SN: 90001-UP
16	416-01-61180	CUSHION	4	SN: 90001-UP
17	417-01-41120	CUSHION	4	SN: 90001-UP
18	418-01-41180	PLATE	4	SN: 90001-UP
19	418-01-41180	PLATE	4	SN: 90001-UP
20	01011-61640	BOLT	2	SN: 90001-UP
21	01011-61640	BOLT	2	SN: 90001-UP
22	416-01-51250	SEAT	2	SN: 90001-UP
23	416-01-51250	SEAT	2	SN: 90001-UP

Reference: B0100-002001

Open this exact parts catalogue on K-Part

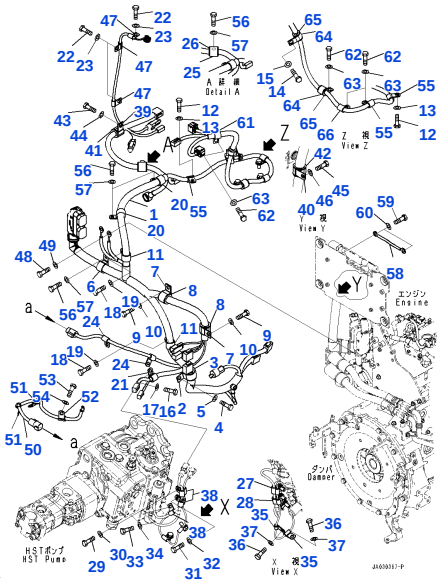

Reference: B0110-001001

B003001 ENGINE WIRING HARNESS, WIRING HARNESS (1/3) (WITH AIR CONDITIONER)(#90001-100999)

Item	Part No.	Part Name	Qty	Options
1	416-06-68112	WIRING HARNESS	1	SN: 90001-100999
	416-06-68111	WIRING HARNESS	1	SN: 90001-95135
2	04434-53412	CLIP	1	SN: 90001-100999
3	07095-20627	CUSHION	1	SN: 90001-100999
4	01010-81025	BOLT	1	SN: 90001-100999
5	01643-31032	WASHER	1	SN: 90001-100999
6	600-051-2300	CLIP	1	SN: 90001-100999
7	04434-53212	CLIP	2	SN: 90001-100999
8	07095-20523	CUSHION	2	SN: 90001-100999
9	01010-81020	BOLT	2	SN: 90001-100999
10	01643-31032	WASHER	2	SN: 90001-100999
11	600-051-2240	CLIP	2	SN: 90001-100999
12	01010-81025	BOLT	2	SN: 90001-100999
13	01643-31032	WASHER	2	SN: 90001-100999
14	01010-81025	BOLT	1	SN: 90001-100999
15	01643-31032	WASHER	1	SN: 90001-100999
16	01010-81030	BOLT	1	SN: 90001-100999
17	01643-31032	WASHER	1	SN: 90001-100999
18	01010-81020	BOLT	2	SN: 90001-100999
19	01643-31032	WASHER	2	SN: 90001-100999
20	600-051-2240	CLIP	2	SN: 90001-100999
21	600-051-2160	CLIP	1	SN: 90001-100999
22	01010-81020	BOLT	3	SN: 90001-100999
23	01643-31032	WASHER	3	SN: 90001-100999
24	600-051-2100	CLIP	2	SN: 90001-100999
25	04434-52712	CLIP	1	SN: 90001-100999
26	07095-20418	CUSHION	1	SN: 90001-100999
27	600-051-2100	CLIP	1	SN: 90001-100999
28	600-051-2100	CLIP	1	SN: 90001-100999
29	01010-81025	BOLT	1	SN: 90001-100999
30	01643-31032	WASHER	1	SN: 90001-100999
31	01010-81025	BOLT	1	SN: 90001-100999
32	01643-31032	WASHER	1	SN: 90001-100999
33	01010-81025	BOLT	1	SN: 90001-100999
34	01643-31032	WASHER	1	SN: 90001-100999
35	600-051-2050	CLIP	2	SN: 90001-100999
36	01010-81025	BOLT	2	SN: 90001-100999
37	01643-31032	WASHER	2	SN: 90001-100999
38	600-051-2060	CLIP	3	SN: 90001-100999
39	04434-52712	CLIP	1	SN: 90001-100999
40	14X-01-61470	CLIP	1	SN: 90001-100999
41	07095-20418	CUSHION	1	SN: 90001-100999
42	22M-62-13660	CUSHION	1	SN: 90001-100999
43	01010-81020	BOLT	1	SN: 90001-100999
44	01643-31032	WASHER	1	SN: 90001-100999
45	01010-81025	BOLT	1	SN: 90001-100999

Item	Part No.	Part Name	Qty	Options
46	01643-31032	WASHER	1	SN: 90001-100999
47	04434-50810	CLIP	3	SN: 90001-100999
48	01010-D1016	BOLT	2	SN: 90001-100999
49	01643-71032	WASHER	2	SN: 90001-100999
50	416-06-62261	WIRING HARNESS	1	SN: 90001-100999
51	600-051-2100	CLIP	2	SN: 90001-100999
52	600-051-2100	CLIP	1	SN: 90001-100999
53	01010-81025	BOLT	1	SN: 90001-100999
54	01643-31032	WASHER	1	SN: 90001-100999
55	600-051-2140	CLIP	3	SN: 90001-100999
56	01010-81020	BOLT	4	SN: 90001-100999
57	01643-31032	WASHER	4	SN: 90001-100999
58	416-06-62780	WIRING HARNESS	1	SN: 90001-100999
59	01010-81016	BOLT	2	SN: 90001-100999
60	01643-31032	WASHER	2	SN: 90001-100999
61	04434-51912	CLIP	1	SN: 90001-100999
62	01010-81025	BOLT	4	SN: 90001-100999
63	01643-31032	WASHER	4	SN: 90001-100999
64	04434-52112	CLIP	2	SN: 90001-100999
65	07095-20314	CUSHION	2	SN: 90001-100999
66	600-051-2140	CLIP	1	SN: 90001-100999
		[B1]-INDICATES PART WITH DISCONTINUED SUPPLY. THE PART SHOWN IN THE LINE ABOVE IS SUPPLIED INSTEAD OF THIS PART.		SN: UP

Reference: B0110-001001

Open this exact parts catalogue on K-Part

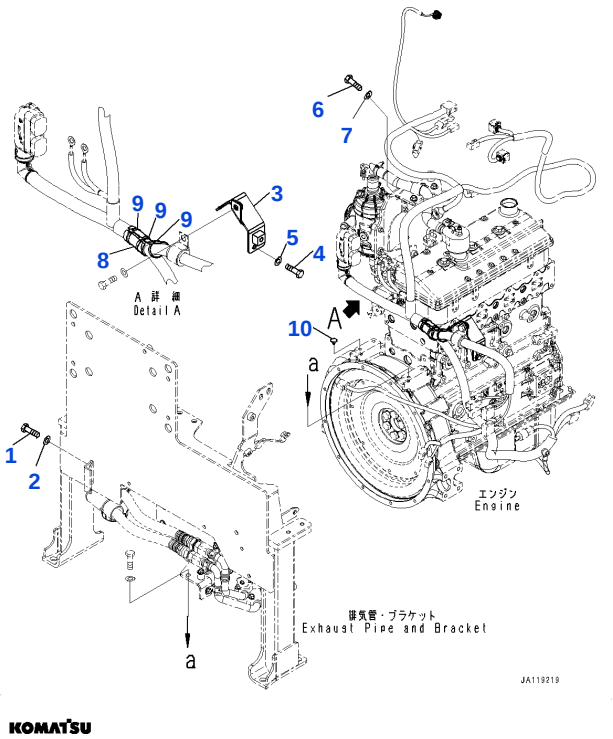

Reference: B0110-001002

B003002 ENGINE WIRING HARNESS, BRACKET (#90001-100999)

Item	Part No.	Part Name	Qty	Options
1	01010-81025	BOLT	2	SN: 90001-100999
2	01643-31032	WASHER	2	SN: 90001-100999
3	416-06-62431	BRACKET	1	SN: 90001-100999
4	01010-80820	BOLT	1	SN: 90001-100999
5	01643-30823	WASHER	1	SN: 90001-100999
6	01010-D1030	BOLT	2	SN: 90001-100999
7	01643-71032	WASHER	2	SN: 90001-100999
8	416-06-61590	SEAT	1	SN: 90001-100999
9	08034-20519	BAND	3	SN: 90001-100999
10	20T-54-74510	CAP	2	SN: 90001-100999

Reference: B0110-001002

Open this exact parts catalogue on K-Part

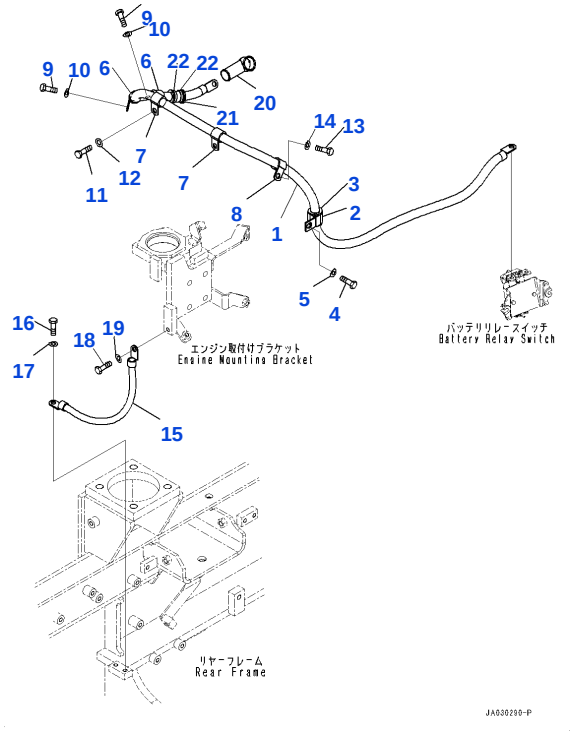

Reference: B0110-001003

B003003 ENGINE WIRING HARNESS, STARTER CABLE (#90001-100999)

Item	Part No.	Part Name	Qty	Options
1	416-06-52270	CABLE	1	SN: 90001-100999
2	04434-52712	CLIP	1	SN: 90001-100999
3	07095-20419	CUSHION	1	SN: 90001-100999
4	01010-81025	BOLT	1	SN: 90001-100999
5	01643-31032	WASHER	1	SN: 90001-100999
6	600-051-2190	CLIP	2	SN: 90001-100999
7	600-051-2190	CLIP	2	SN: 90001-100999
8	600-051-2190	CLIP	1	SN: 90001-100999
9	01010-81025	BOLT	2	SN: 90001-100999
10	01643-31032	WASHER	2	SN: 90001-100999
11	01010-81025	BOLT	2	SN: 90001-100999
12	01643-31032	WASHER	2	SN: 90001-100999
13	01010-81025	BOLT	1	SN: 90001-100999
14	01643-31032	WASHER	1	SN: 90001-100999
15	416-06-52290	CABLE	1	SN: 90001-100999
16	01010-81020	BOLT	1	SN: 90001-100999
17	01643-31032	WASHER	1	SN: 90001-100999
18	01010-81020	BOLT	1	SN: 90001-100999
19	01643-31032	WASHER	1	SN: 90001-100999
20	11Y-06-11630	CAP	1	SN: 90001-100999
21	07095-20318	CUSHION	1	SN: 90001-100999
22	08034-20536	BAND	2	SN: 90001-100999

Reference: B0110-001003

Open this exact parts catalogue on K-Part

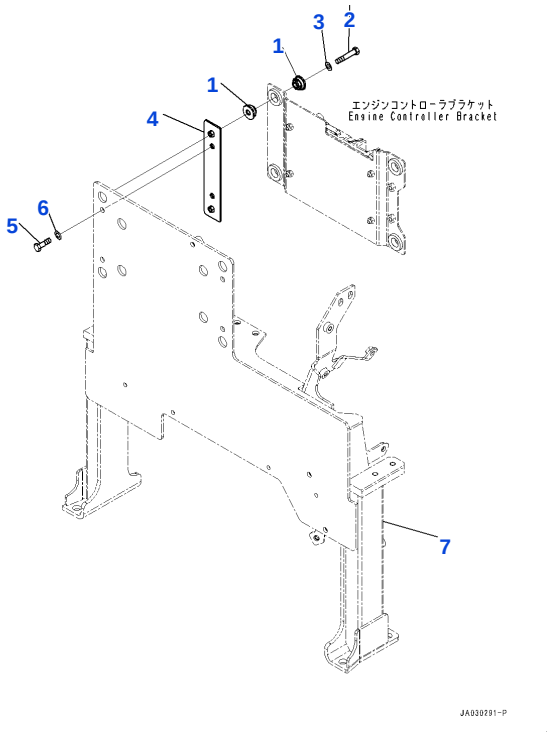

Reference: B0110-001004

B003004 ENGINE WIRING HARNESS, ENGINE CONTROLLER MOUNTING(#90001-100999)

Item	Part No.	Part Name	Qty	Options
1	6251-81-7210	CUSHION	8	SN: 90001-100999
2	01010-80850	BOLT	4	SN: 90001-100999
3	01643-30823	WASHER	4	SN: 90001-100999
4	416-06-62120	BRACKET	2	SN: 90001-100999
5	01010-81025	BOLT	4	SN: 90001-100999
6	01643-31032	WASHER	4	SN: 90001-100999
7	416-02-62331	FRAME (EXHAUST PIPE, EXHAUST PIPE AND BRACKET)	-1	SN: UP
	416-02-62331	FRAME (EXHAUST PIPE, EXHAUST PIPE AND BRACKET)	-1	SN: UP
	416-02-62331	FRAME (EXHAUST PIPE, EXHAUST PIPE AND BRACKET)	-1	SN: UP
	416-02-62331	FRAME (EXHAUST PIPE, EXHAUST PIPE AND BRACKET)	-1	SN: UP
	416-02-62331	FRAME (EXHAUST PIPE, EXHAUST PIPE AND BRACKET)	-1	SN: UP
	416-02-62331	FRAME (EXHAUST PIPE, EXHAUST PIPE AND BRACKET, WITH RECTANGULAR RADIATOR)	-1	SN: UP
	416-02-62331	FRAME (EXHAUST PIPE, EXHAUST PIPE AND BRACKET, WITH RECTANGULAR RADIATOR)	-1	SN: UP
	416-02-62331	FRAME (EXHAUST PIPE, EXHAUST PIPE AND BRACKET, WITH RECTANGULAR RADIATOR)	-1	SN: UP
	416-02-62331	FRAME (EXHAUST PIPE, EXHAUST PIPE AND BRACKET, WITH RECTANGULAR RADIATOR)	-1	SN: UP
	416-02-62331	FRAME (EXHAUST PIPE, EXHAUST PIPE BRACKET, WITH ROPS CANOPY)	-1	SN: UP
	416-02-62331	FRAME (EXHAUST PIPE, EXHAUST PIPE BRACKET, WITH ROPS CANOPY)	-1	SN: UP
	416-02-62331	FRAME (EXHAUST PIPE, EXHAUST PIPE BRACKET, WITH ROPS CANOPY)	-1	SN: UP
	416-02-62331	FRAME (EXHAUST PIPE, EXHAUST PIPE BRACKET, WITH ROPS CANOPY)	-1	SN: UP
	416-02-62331	FRAME (EXHAUST PIPE, EXHAUST PIPE BRACKET, WITH ROPS CANOPY)	-1	SN: UP

Open this exact parts catalogue on K-Part

Item	Part No.	Part Name	Qty	Options
	416-02-62331	FRAME(EXHAUST PIPE,EXHAUST PIPE/BRACKET,RECTANGULAR RADIATOR,WITH ROPS CANOPY)	-1	SN: UP
	416-02-62331	FRAME(EXHAUST PIPE,EXHAUST PIPE/BRACKET,RECTANGULAR RADIATOR,WITH ROPS CANOPY)	-1	SN: UP
	416-02-62331	FRAME(EXHAUST PIPE,EXHAUST PIPE/BRACKET,RECTANGULAR RADIATOR,WITH ROPS CANOPY)	-1	SN: UP
	416-02-62331	FRAME(EXHAUST PIPE,EXHAUST PIPE/BRACKET,RECTANGULAR RADIATOR,WITH ROPS CANOPY)	-1	SN: UP

Reference: B0110-001004

Open this exact parts catalogue on K-Part

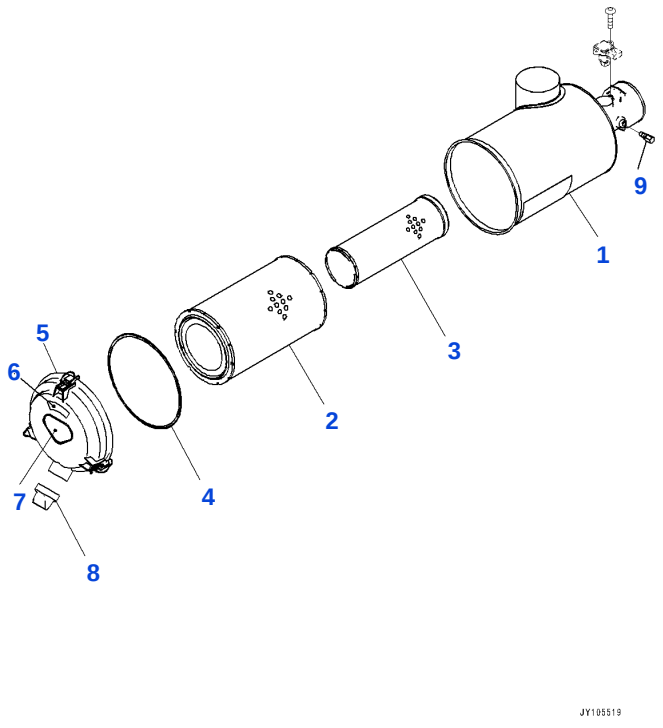

Reference: B0110-001005

B003005 ENGINE WIRING HARNESS, AIR CLEANER COMPONENT PARTS (#90001-100999)

Item	Part No.	Part Name	Qty	Options
	6276-81-7500	AIR CLEANER	1	SN: 90001-100999
1		• BODY	1	SN: 90001-100999
	600-185-2500	• ELEMENT ASSEMBLY	1	SN: 90001-100999
2	600-185-2510	• • ELEMENT, OUTER	1	SN: 90001-100999
3		• • ELEMENT, INNER	1	SN: 90001-100999
4	600-184-1280	• • O-RING	1	SN: 90001-100999
5	416-01-61171	• COVER ASSEMBLY	1	SN: 90001-100999
6	600-181-1930	• • PLATE, AIR CLEANER CLEANING COUNT SEAL	1	SN: 90001-100999
7	600-184-2810	• • PLATE, MARK, TOP	1	SN: 90001-100999
8	600-184-1350	• • VALVE, VACUATOR	1	SN: 90001-100999
9	561-02-12420	• CAP	1	SN: 90001-100999
		[C1]-PARTS WITH THIS SYMBOL CANNOT BE SUPPLIED INDIVIDUALLY. THEY ARE SUPPLIED AS ASSEMBLIES.		SN: UP

Reference: B0110-001005

Open this exact parts catalogue on K-Part

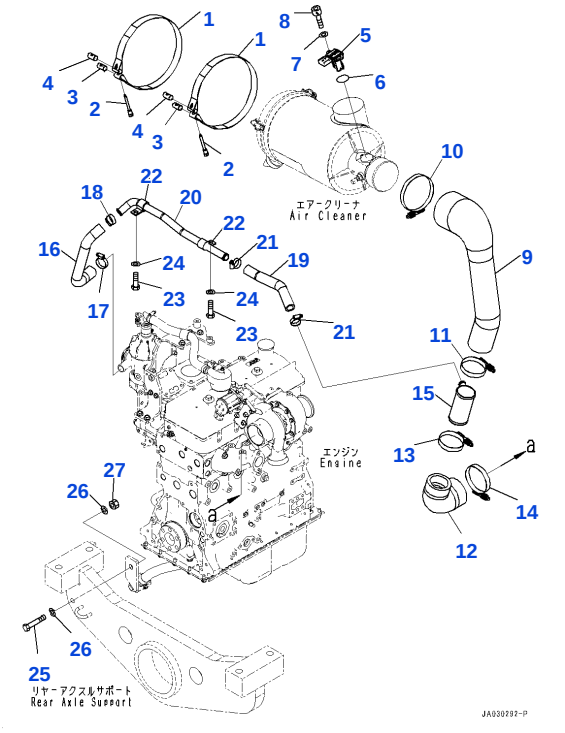

Reference: B0110-001006

B003006 ENGINE WIRING HARNESS, AIR CLEANER MOUNTING (1/2) (#90001-92737)

Item	Part No.	Part Name	Qty	Options
1	124-01-56910	BAND	2	SN: 90001-@
2	6110-23-6520	BOLT	2	SN: 90001-@
3	124-01-56920	PIN	2	SN: 90001-@
4	124-01-56930	PIN	2	SN: 90001-@
5	6252-81-7800	SENSOR AIRFLOW	1	SN: 90001-@
	6252-81-7900	SENSOR AIRFLOW	1	SN: 90001-92625
6	6252-81-7910	• O-RING	1	SN: 90001-@
7	01640-20408	WASHER	2	SN: 90001-@
8	01252-B0410	BOLT, HEXAGON SOCKET HEAD	2	SN: 90001-@
9	416-01-61111	HOSE	1	SN: 90001-@
10	07299-00120	CLAMP	1	SN: 90001-@
11	07299-00080	CLAMP, HOSE	1	SN: 90001-@
12	416-01-61121	HOSE	1	SN: 90001-@
13	07299-00080	CLAMP, HOSE	1	SN: 90001-@
14	07299-00095	CLAMP, HOSE	1	SN: 90001-@
15	416-01-61131	TUBE	1	SN: 90001-@
16	416-01-61141	HOSE	1	SN: 90001-@
17	6746-21-7150	CLAMP	1	SN: 90001-@
18	6746-21-7150	CLAMP	1	SN: 90001-92737
19	416-01-61151	HOSE	1	SN: 90001-92737
20	416-01-61191	TUBE	1	SN: 90001-92737
21	6746-21-7150	CLAMP	2	SN: 90001-92737
22	04434-51910	CLIP	2	SN: 90001-92737
23	01010-81020	BOLT	2	SN: 90001-92737
24	01643-31032	WASHER	2	SN: 90001-92737
25	01010-81475	BOLT	1	SN: 90001-@
26	01643-31445	WASHER, FLAT	2	SN: 90001-@
27	01580-11411	NUT	1	SN: 90001-@
		[B1]-INDICATES PART WITH DISCONTINUED SUPPLY. THE PART SHOWN IN THE LINE ABOVE IS SUPPLIED INSTEAD OF THIS PART.		SN: UP

Get the complete PDF catalogue

Komatsu WA100-8 (JPN) S/N 90001-100999 (Japanese)

$89

with PayPal | Store cart: $99

Buy this PDF on Manuals Komatsu

Check the model, serial range and language before payment.

Download instructions are emailed after payment confirmation.

This free sample contains 10 catalogue pages.