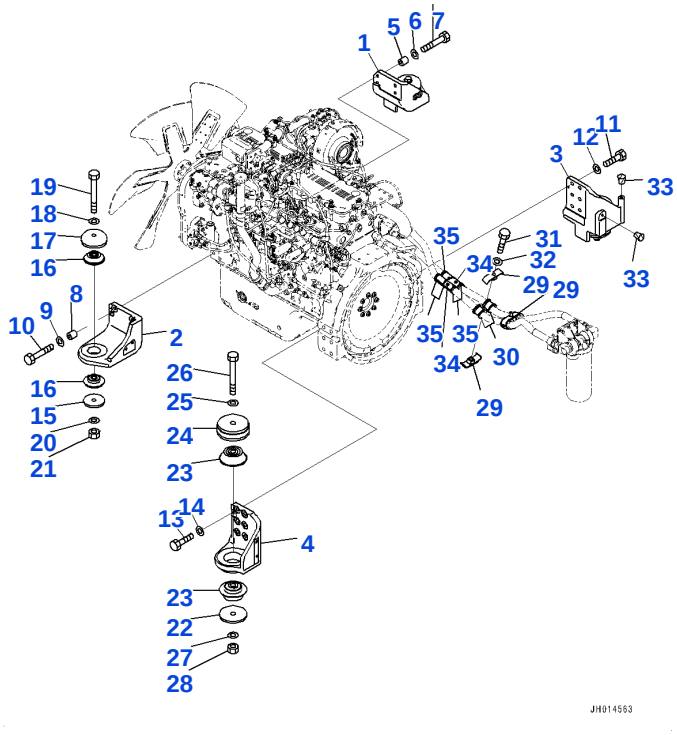

Reference: B0100-001001

B001001 Engine installation, bracket (#90001-)

Item	Part No.	Part Name	Qty	Options
1	2A7-01-11851	BRACKET	1	SN: 90001-UP
2	2A7-01-11861	BRACKET	1	SN: 90001-UP
3	207-01-41221	BRACKET	1	SN: 90001-UP
4	207-01-41210	BRACKET	1	SN: 90001-UP
5	2A7-01-11871	COLLAR	4	SN: 90001-UP
6	01643-31232	WASHER	4	SN: 90001-UP
7	2A5-01-11230	BOLT	4	SN: 90001-UP
8	2A7-01-11871	COLLAR	4	SN: 90001-UP
9	01643-31232	WASHER	4	SN: 90001-UP
10	2A5-01-11230	BOLT	4	SN: 90001-UP
11	01010-81645	BOLT	6	SN: 90001-UP
12	01643-31645	WASHER	6	SN: 90001-UP
13	01010-81645	BOLT	6	SN: 90001-UP
14	01643-31645	WASHER	6	SN: 90001-UP
15	207-01-75150	PLATE	2	SN: 90001-UP
16	207-01-41231	CUSHION	4	SN: 90001-UP
17	207-01-61150	STOPPER	2	SN: 90001-UP
18	01643-31845	WASHER	2	SN: 90001-UP
19	207-01-55181	BOLT	2	SN: 90001-UP
20	01643-31845	WASHER	2	SN: 90001-UP
21	01580-11815	NUT	2	SN: 90001-UP
22	208-01-11161	WASHER	2	SN: 90001-UP
23	208-01-55220	CUSHION	4	SN: 90001-UP
24	207-01-61170	STOPPER	2	SN: 90001-UP
25	01643-32460	WASHER	2	SN: 90001-UP
26	208-01-11181	BOLT	2	SN: 90001-UP
27	01643-32460	WASHER	2	SN: 90001-UP
28	01580-12419	NUT	2	SN: 90001-UP
29	07094-30620	CLAMP	4	SN: 90001-UP
30	07095-00630	CUSHION	4	SN: 90001-UP
31	01010-81270	BOLT	2	SN: 90001-UP
32	01643-31232	WASHER	2	SN: 90001-UP
33	07049-01215	PLUG, CORK	2	SN: 90001-UP
34	20Y-01-41250	COVER	2	SN: 90001-UP

Item	Part No.	Part Name	Qty	Options
35	08034-20536	BAND	5	SN: 90001-UP

Reference: B0100-001001

Open this exact parts catalogue on K-Part

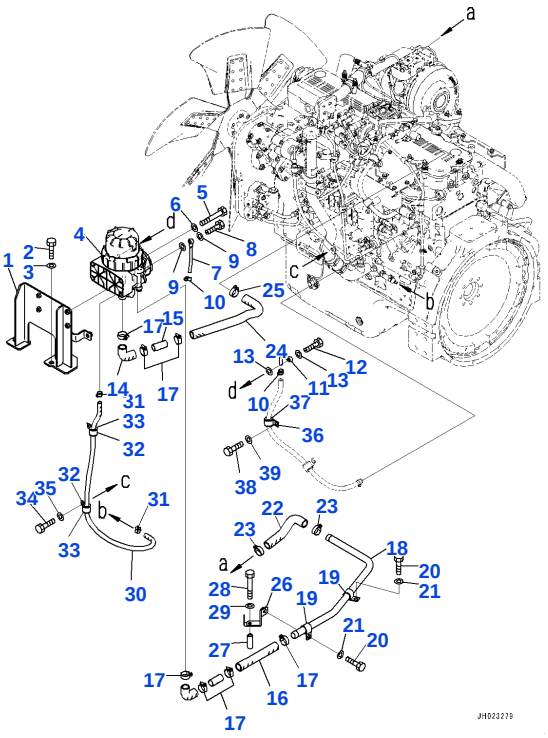

Reference: B0100-001002

B001002 Engine installation, Komatsu Closed Crankcase Ventilation (KCCV) piping (#90001-92097)

Item	Part No.	Part Name	Qty	Options
1	2A7-01-11391	BRACKET	1	SN: 90001-@
2	01010-81230	BOLT	2	SN: 90001-@
3	01643-31232	WASHER	2	SN: 90001-@
4	600-332-2311	VENTILATOR	1	SN: 90001-@
	600-331-2900	• ELEMENT KIT	1	SN: 90001-@
5	01010-81070	BOLT	4	SN: 90001-@
6	01643-31032	WASHER	4	SN: 90001-@
7	6746-21-7610	JOINT	1	SN: 90001-@
8	07206-30812	BOLT, JOINT	1	SN: 90001-@
9	07005-01212	SEAL, WASHER	2	SN: 90001-@
10	07281-00197	CLAMP	2	SN: 90001-@
11	6751-81-5190	JOINT	1	SN: 90001-@
12	07206-30812	BOLT, JOINT	1	SN: 90001-@
13	07005-01212	SEAL, WASHER	2	SN: 90001-@
14	6746-21-7230	HOSE	2	SN: 90001-@
15	6746-21-7220	TUBE	2	SN: 90001-@
16	2A7-01-11540	HOSE	1	SN: 90001-@
17	07281-00359	CLAMP, HOSE	7	SN: 90001-@
18	2A7-01-11470	TUBE	1	SN: 90001-@
19	04434-52512	CLIP	2	SN: 90001-@
20	01010-81225	BOLT	2	SN: 90001-@
21	01643-31232	WASHER	2	SN: 90001-@
22	2A7-01-11551	HOSE	1	SN: 90001-@
23	07281-00359	CLAMP, HOSE	2	SN: 90001-@
24	2A7-01-11531	HOSE	1	SN: 90001-@
25	07281-00359	CLAMP, HOSE	1	SN: 90001-@
26	2A7-01-11661	BRACKET	1	SN: 90001-@
27	6217-71-5440	SPACER	1	SN: 90001-@
28	01010-80880	BOLT	1	SN: 90001-@
29	01643-30823	WASHER	1	SN: 90001-@
30	2A7-01-11591	HOSE ASSEMBLY	1	SN: 90001-@
31	07281-00197	CLAMP	2	SN: 90001-91850
32	04434-52312	CLIP	2	SN: 90001-@

Item	Part No.	Part Name	Qty	Options
33	2A5-01-11580	CUSHION	2	SN: 90001-@
34	01010-81225	BOLT	2	SN: 90001-@
35	01643-31232	WASHER	2	SN: 90001-@
36	04434-52312	CLIP	1	SN: 90001-@
37	2A5-01-11580	CUSHION	1	SN: 90001-@
38	01010-81225	BOLT	1	SN: 90001-@
39	01643-31232	WASHER	1	SN: 90001-@

Reference: B0100-001002

Open this exact parts catalogue on K-Part

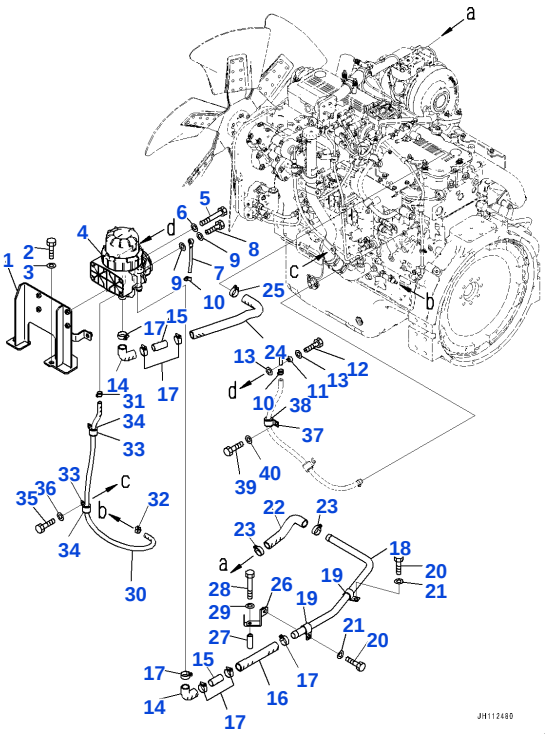

Reference: B0100-001002A

B001003 Engine installation, Komatsu Closed Crankcase Ventilation (KCCV) piping (#92098-)

Item	Part No.	Part Name	Qty	Options
1	2A7-01-11391	BRACKET	1	SN: 90001-UP
2	01010-81230	BOLT	2	SN: 90001-UP
3	01643-31232	WASHER	2	SN: 90001-UP
4	600-332-2311	VENTILATOR	1	SN: 90001-UP
5	01010-81070	BOLT	4	SN: 90001-UP
6	01643-31032	WASHER	4	SN: 90001-UP
7	6746-21-7610	JOINT	1	SN: 90001-UP
8	07206-30812	BOLT, JOINT	1	SN: 90001-UP
9	07005-01212	SEAL, WASHER	2	SN: 90001-UP
10	11Y-09-11140	CLIP	2	SN: 92098-UP
	07281-00197	CLAMP	2	SN: 90001-92097
11	6751-81-5190	JOINT	1	SN: 90001-UP
12	07206-30812	BOLT, JOINT	1	SN: 90001-UP
13	07005-01212	SEAL, WASHER	2	SN: 90001-UP
14	6746-21-7230	HOSE	2	SN: 90001-UP
15	6746-21-7220	TUBE	2	SN: 90001-UP
16	2A7-01-11540	HOSE	1	SN: 90001-UP
17	07281-00359	CLAMP, HOSE	7	SN: 90001-UP
18	2A7-01-11470	TUBE	1	SN: 90001-UP
19	04434-52512	CLIP	2	SN: 90001-UP
20	01010-81225	BOLT	2	SN: 90001-UP
21	01643-31232	WASHER	2	SN: 90001-UP
22	2A7-01-11551	HOSE	1	SN: 90001-UP
23	07281-00359	CLAMP, HOSE	2	SN: 90001-UP
24	2A7-01-11531	HOSE	1	SN: 90001-UP
25	07281-00359	CLAMP, HOSE	1	SN: 90001-UP
26	2A7-01-11661	BRACKET	1	SN: 90001-UP
27	6217-71-5440	SPACER	1	SN: 90001-UP
28	01010-80880	BOLT	1	SN: 90001-UP
29	01643-30823	WASHER	1	SN: 90001-UP
30	2A7-01-11591	HOSE ASSEMBLY	1	SN: 90001-UP
31	11Y-09-11140	CLIP	1	SN: 92098-UP
	07281-00197	CLAMP	1	SN: 91851-92097

Item	Part No.	Part Name	Qty	Options
32	11Y-09-11140	CLIP	1	SN: 90001-UP
33	04434-52312	CLIP	2	SN: 90001-UP
34	2A5-01-11580	CUSHION	2	SN: 90001-UP
35	01010-81225	BOLT	2	SN: 90001-UP
36	01643-31232	WASHER	2	SN: 90001-UP
37	04434-52312	CLIP	1	SN: 90001-UP
38	2A5-01-11580	CUSHION	1	SN: 90001-UP
39	01010-81225	BOLT	1	SN: 90001-UP
40	01643-31232	WASHER	1	SN: 90001-UP
		[A2]-INSTEAD OF PARTS WITH THIS SYMBOL, THE PARTS LISTED IN THE ROW ABOVE CAN BE USED.		SN: UP

Reference: B0100-001002A

Open this exact parts catalogue on K-Part

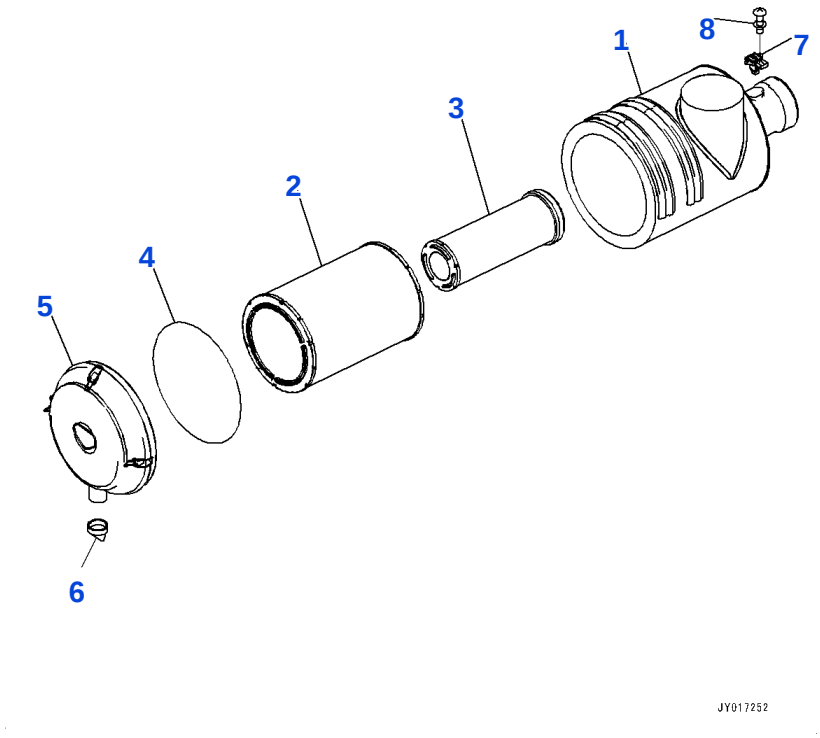

Reference: B0200-001001

B002001 Air cleaner, components (#90001-)

Item	Part No.	Part Name	Qty	Options
1	6755-81-7300	AIR CLEANER	1	SN: 90001-UP
	600-185-5100	• ELEMENT ASSEMBLY	1	SN: 90001-UP
2	600-185-5110	• • ELEMENT, OUTER	1	SN: 90001-UP
3		• • ELEMENT, INNER	1	SN: 90001-UP
4	600-184-1570	• • O-RING	1	SN: 90001-UP
5	600-184-1510	• COVER ASSEMBLY	1	SN: 90001-UP
6	600-184-1350	• VALVE, VACUATOR	1	SN: 90001-UP
7	6252-81-7800	SENSOR AIRFLOW	1	SN: 90001-UP
	6252-81-7900	SENSOR AIRFLOW	1	SN: 90001-91927
	6252-81-7910	• O-RING	1	SN: 90001-UP
8	01023-10412	SCREW	2	SN: 90001-UP
		[B1]-INDICATES PART WITH DISCONTINUED SUPPLY. THE PART SHOWN IN THE LINE ABOVE IS SUPPLIED INSTEAD OF THIS PART.		SN: UP
		[C1]-PARTS WITH THIS SYMBOL CANNOT BE SUPPLIED INDIVIDUALLY. THEY ARE SUPPLIED AS ASSEMBLIES.		SN: UP

Reference: B0200-001001

Open this exact parts catalogue on K-Part

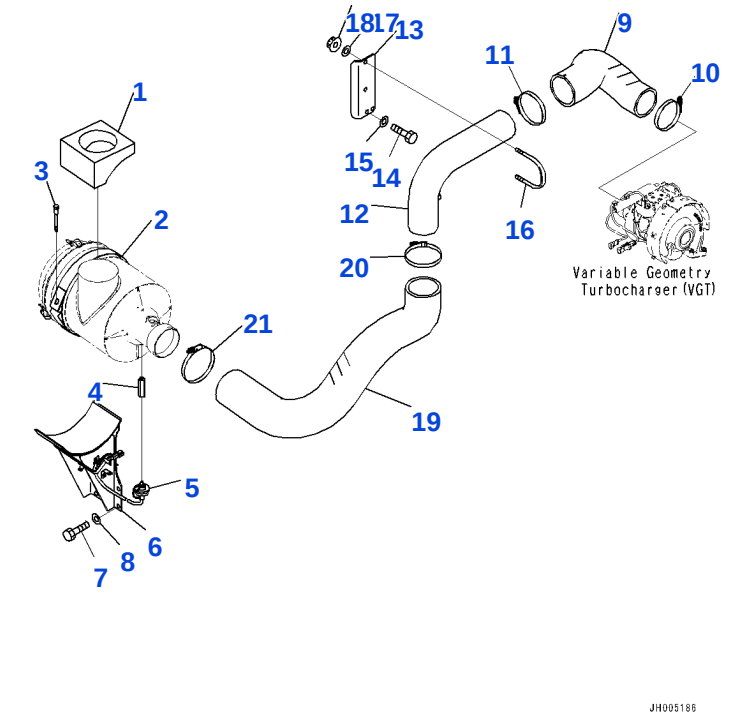

Reference: B0200-001002

B002002 Air cleaner, installation (#90001-)

Item	Part No.	Part Name	Qty	Options
1	207-01-41180	SEAL	1	SN: 90001-UP
2	6151-11-4840	BAND	1	SN: 90001-UP
3	6643-11-4641	BOLT	1	SN: 90001-UP
4	208-01-41910	JOINT	1	SN: 90001-UP
5	7861-93-1430	SENSOR, DUST INDICATOR	1	SN: 90001-UP
6	207-01-41151	BRACKET	1	SN: 90001-UP
7	01010-81240	BOLT	4	SN: 90001-UP
8	01643-31232	WASHER	4	SN: 90001-UP
9	207-01-41110	HOSE	1	SN: 90001-UP
10	07299-00120	CLAMP	1	SN: 90001-UP
11	07299-00130	CLAMP	1	SN: 90001-UP
12	207-01-41121	TUBE	1	SN: 90001-UP
13	207-01-41141	BRACKET	1	SN: 90001-UP
14	01010-81240	BOLT	2	SN: 90001-UP
15	01643-31232	WASHER	2	SN: 90001-UP
16	07283-31185	CLIP	1	SN: 90001-UP
17	01643-31232	WASHER	2	SN: 90001-UP
18	01597-01211	NUT	2	SN: 90001-UP
19	207-01-41131	HOSE	1	SN: 90001-UP
20	07299-00130	CLAMP	1	SN: 90001-UP
21	07299-00145	CLAMP	1	SN: 90001-UP

Reference: B0200-001002

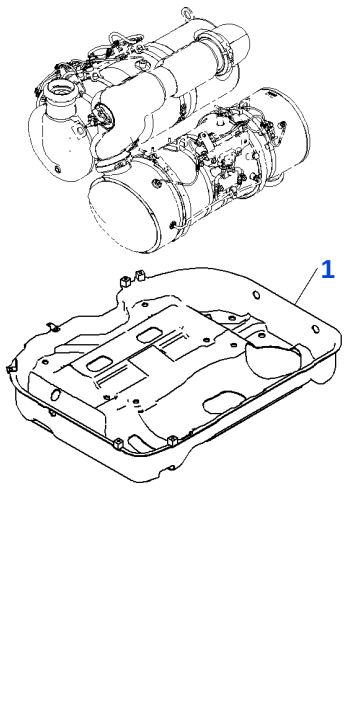

Reference: B0300-001001

B003001 Exhaust, bracket(#90001-)

Item	Part No.	Part Name	Qty	Options
1	2A7-01-11011	BRACKET	1	SN: 90001-UP

Reference: B0300-001001

Open this exact parts catalogue on K-Part

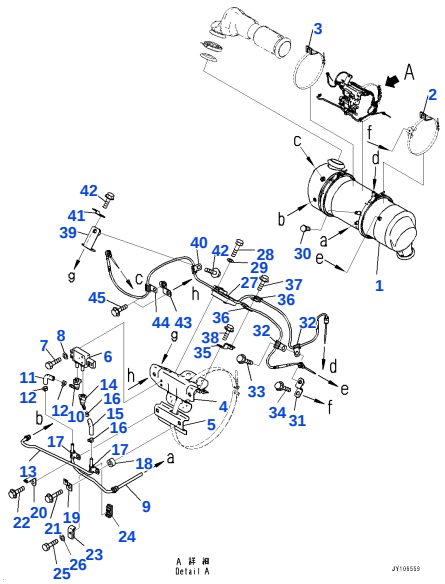

Reference: B0300-001002

B003002 Exhaust, Komatsu Diesel Particulate Filter (KDPF)(#90001-)

Item	Part No.	Part Name	Qty	Options
	6535-01-0010	KOMATSU DIESEL PARTICULATE FILTER (KDPF) ASSEMBLY	1	SN: 90001-UP
1		• BODY	1	SN: 90001-UP
2	6524-91-4011	• HANGER	1	SN: 90001-UP
3	6524-91-4011	• HANGER	1	SN: 90001-UP
4	6535-81-2110	• BRACKET	1	SN: 90001-UP
5	6535-81-2140	• BRACKET	1	SN: 90001-UP
6	6520-81-1010	• SENSOR, PRESSURE, KOMATSU DIESEL PARTICULATE FILTER (KDPF)	1	SN: 90001-UP
7	01010-80630	• BOLT	2	SN: 90001-UP
8	01643-30623	• WASHER	2	SN: 90001-UP
9	6535-81-2120	• TUBE	1	SN: 90001-UP
10	6520-81-1080	• CONNECTOR	1	SN: 90001-UP
11	6520-81-1060	• HOSE	1	SN: 90001-UP
12	07285-00115	• CLIP	2	SN: 90001-UP
13	6535-81-2130	• TUBE	1	SN: 90001-UP
14	6520-81-1080	• CONNECTOR	1	SN: 90001-UP
15	6520-81-1060	• HOSE	1	SN: 90001-UP
16	07285-00115	• CLIP	2	SN: 90001-UP
17	600-052-3080	• CLIP	2	SN: 90001-UP
18	6526-91-1060	• SPACER	1	SN: 90001-UP
19	2A7-06-11260	• CLIP	1	SN: 90001-UP
20	6252-81-9630	• CLIP	1	SN: 90001-UP
21	01435-01030	• BOLT, FLANGE TYPE	1	SN: 90001-UP
22	01435-01016	• BOLT, FLANGE TYPE	1	SN: 90001-UP
23	6217-71-6650	• CLAMP	1	SN: 90001-UP
24	6217-71-6640	• CLAMP	1	SN: 90001-UP
25	01010-80630	• BOLT	1	SN: 90001-UP
26	01643-30623	• WASHER	1	SN: 90001-UP
27	600-816-2421	• SENSOR, TEMPERATURE, KOMATSU DIESEL PARTICULATE FILTER (KDPF)	1	SN: 91365-UP
	600-816-2420	• SENSOR, TEMPERATURE, KOMATSU DIESEL PARTICULATE FILTER (KDPF)	1	SN: 90001-91364
28	01010-80630	• BOLT	2	SN: 90001-UP
29	01643-30623	• WASHER	2	SN: 90001-UP
30	6535-81-2181	• PLUG	1	SN: 92350-UP
	6535-81-2180	• PLUG	1	SN: 90001-92349
31	6535-81-2170	• BRACKET	1	SN: 90001-UP
32	6530-91-1010	• CLIP	2	SN: 90001-UP
33	01435-01020	• BOLT, FLANGE TYPE	1	SN: 90001-UP
34	01435-01016	• BOLT, FLANGE TYPE	1	SN: 90001-UP
35	6535-81-2170	• BRACKET	1	SN: 90001-UP
36	6530-91-1010	• CLIP	2	SN: 90001-UP
37	01435-01020	• BOLT, FLANGE TYPE	1	SN: 90001-UP
38	01435-01016	• BOLT, FLANGE TYPE	1	SN: 90001-UP
39	6534-81-2160	• BRACKET	1	SN: 90001-UP
40	6530-91-1010	• CLIP	1	SN: 90001-UP
41	08057-00810	• CLIP	1	SN: 90001-UP

Get the complete PDF catalogue

Komatsu PC350LC-11 (JPN) S/N 90161-93999 (Dismantling long front, dismantling 2-piece boom specification)

$89

with PayPal | Store cart: $99

Buy this PDF on Manuals Komatsu

Check the model, serial range and language before payment.

Download instructions are emailed after payment confirmation.

This free sample contains 10 catalogue pages.