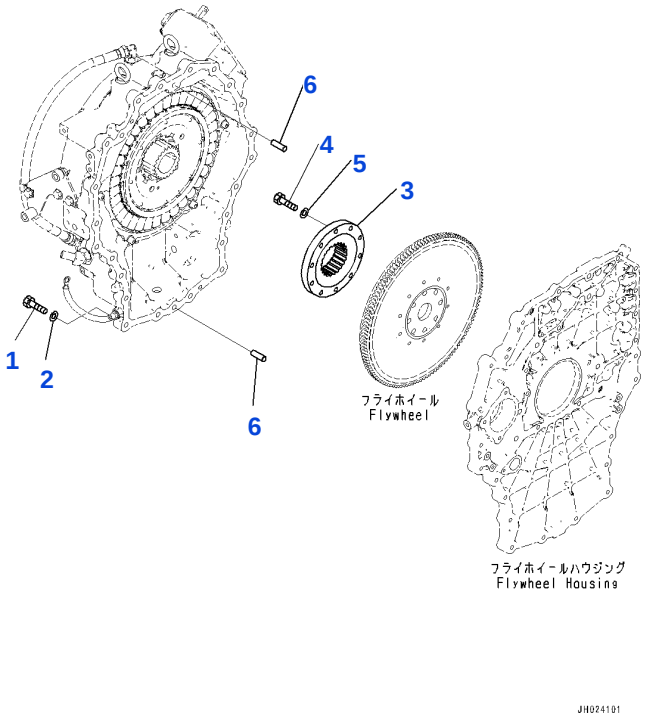

Reference: B0000-002001

B001001 ENGINE RELATED PARTS, GENERATOR MOTOR INSTALLATION(#70001-)

Item	Part No.	Part Name	Qty	Options
1	01010-81250	BOLT	23	SN: 70001-UP
2	01643-31232	WASHER	23	SN: 70001-UP
3	7875-12-7830	COUPLING	1	SN: 70001-UP
4	01010-81040	BOLT	10	SN: 70001-UP
5	01643-31032	WASHER	10	SN: 70001-UP
6	04020-01228	PIN, DOWEL	2	SN: 70001-UP

Reference: B0000-002001

Open this exact parts catalogue on K-Part

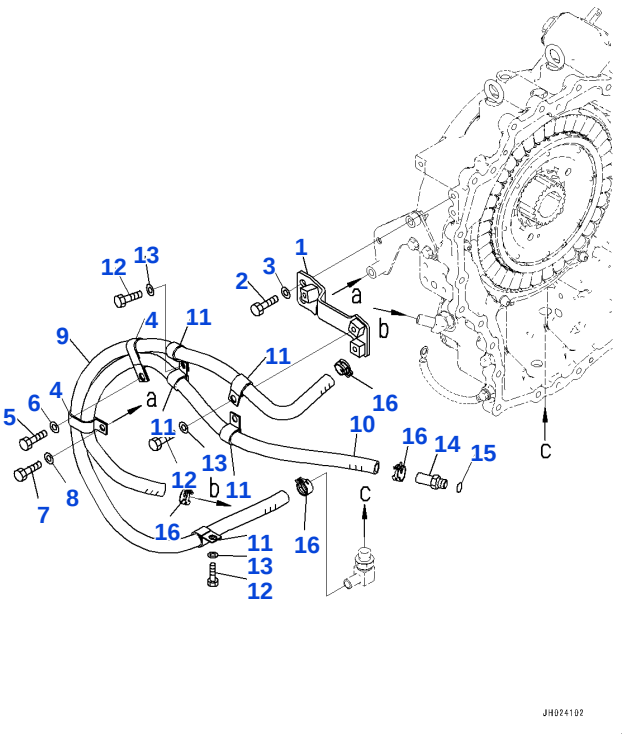

Reference: B0000-002002

B001002 ENGINE RELATED PARTS, WATER PIPING (#70001-)

Item	Part No.	Part Name	Qty	Options
1	205-01-21710	BRACKET	1	SN: 70001-UP
2	01010-81230	BOLT	2	SN: 70001-UP
3	01643-31232	WASHER	2	SN: 70001-UP
4	203-979-7170	CLIP	2	SN: 70001-UP
5	01010-81240	BOLT	1	SN: 70001-UP
6	01643-31232	WASHER	1	SN: 70001-UP
7	01010-81260	BOLT	1	SN: 70001-UP
8	01643-31232	WASHER	1	SN: 70001-UP
9	205-01-21410	HOSE ASSEMBLY	1	SN: 70001-UP
10	205-01-21420	HOSE	1	SN: 70001-UP
11	04434-52512	CLIP	5	SN: 70001-UP
12	01010-81230	BOLT	4	SN: 70001-UP
13	01643-31232	WASHER	4	SN: 70001-UP
14	7875-10-9581	JOINT	1	SN: 70001-UP
15	07002-61823	O-RING	1	SN: 70001-UP
16	7875-12-2730	CLAMP	4	SN: 70001-UP

Reference: B0000-002002

Open this exact parts catalogue on K-Part

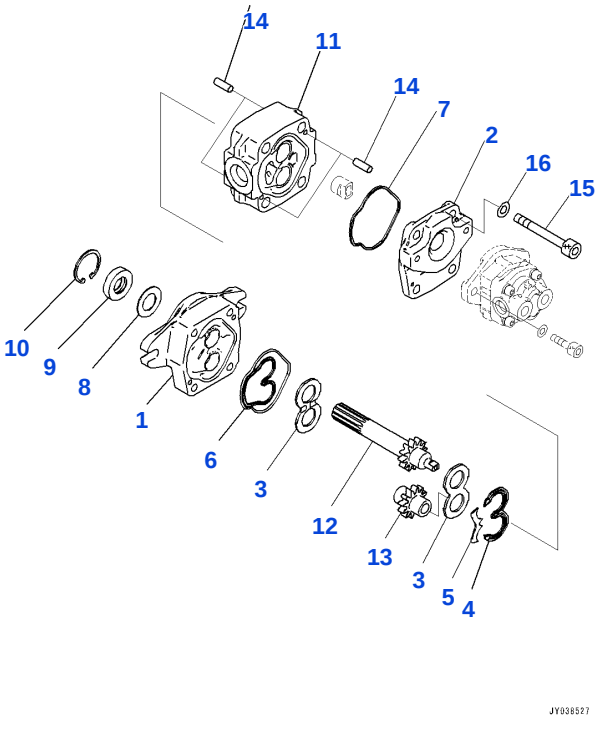

Reference: B0000-002003

B001003 ENGINE RELATED PARTS, GEAR PUMP (1/2) (#70001-)

Item	Part No.	Part Name	Qty	Options
	705-40-06540	PUMP ASSEMBLY	1	SN: 70001-UP
	705-40-03390	• PUMP ASSEMBLY, GEAR (SBL 4.5)	1	SN: 70001-UP
1	705-40-83090	• • BRACKET ASSEMBLY	1	SN: 70001-UP
	705-40-83080	• • • BRACKET	1	SN: 70001-UP
	705-40-83630	• • • BEARING, PLAIN	1	SN: 70001-UP
	705-40-83640	• • • BEARING, PLAIN	1	SN: 70001-UP
2	705-40-83070	• • PLATE	1	SN: 70001-UP
3	705-40-83720	• • PLATE, SIDE	2	SN: 70001-UP
4	705-40-83780	• • SEAL	1	SN: 70001-UP
5	705-40-80881	• • PLATE	1	SN: 70001-UP
6	705-40-80770	• • SEAL	1	SN: 70001-UP
7	705-40-80640	• • RING, SEAL	1	SN: 70001-UP
8	705-40-80870	• • PLATE	1	SN: 70001-UP
9	705-40-80820	• • SEAL, OIL	1	SN: 70001-UP
10	04065-03515	• • RING, SNAP	1	SN: 70001-UP
11	705-40-17370	• • CARRIER ASSEMBLY	1	SN: 70001-UP
	705-40-17380	• • • CARRIER	1	SN: 70001-UP
	705-40-83630	• • • BEARING, PLAIN	1	SN: 70001-UP
	705-40-83640	• • • BEARING, PLAIN	1	SN: 70001-UP
12	705-40-17590	• • GEAR, DRIVE	1	SN: 70001-UP
13	705-40-17H10	• • GEAR, DRIVEN	1	SN: 70001-UP
14	04020-00514	• • PIN, DOWEL	4	SN: 70001-UP
15	01252-61070	• • BOLT, HEXAGON SOCKET HEAD	4	SN: 70001-UP
16	01643-51032	• • WASHER	4	SN: 70001-UP
		[C2]-PARTS WITH THIS SYMBOL ARE FOR SPECIFIC KOMATSU DEALERS. THEY CANNOT BE SUPPLIED AS INDIVIDUAL PARTS. THEY ARE SUPPLIED ONLY AS ASSEMBLY PARTS.		SN: UP

Reference: B0000-002003

Open this exact parts catalogue on K-Part

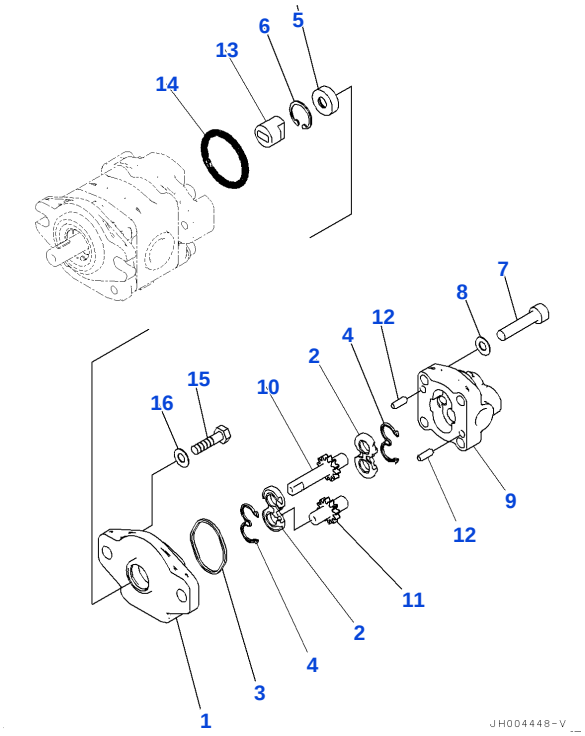

Reference: B0000-002004

B001004 ENGINE RELATED PARTS, GEAR PUMP (2/2)(#70001-)

Item	Part No.	Part Name	Qty	Options
	705-40-06540	PUMP ASSEMBLY	1	SN: 70001-UP
	705-42-01510	• PUMP ASSEMBLY	1	SN: 70001-UP
1	705-42-82270	• • BRACKET ASSEMBLY	1	SN: 70001-UP
	705-42-80610	• • • BUSH, PLAIN	2	SN: 70001-UP
2	705-42-80711	• • PLATE, SIDE	2	SN: 70001-UP
3	705-42-80630	• • SEAL	1	SN: 70001-UP
4	705-42-80730	• • SEAL	2	SN: 70001-UP
5	705-42-80810	• • SEAL, OIL	2	SN: 70001-UP
6	04065-02212	• • RING, SNAP	1	SN: 70001-UP
7	705-42-80750	• • BOLT	4	SN: 70001-UP
8	705-42-80980	• • WASHER	4	SN: 70001-UP
9	705-42-20210	• • HOUSING ASSEMBLY	1	SN: 70001-UP
	705-42-80610	• • • BUSH, PLAIN	2	SN: 70001-UP
10	705-42-20490	• • GEAR, DRIVE	1	SN: 70001-UP
11	705-42-20510	• • GEAR, DRIVEN	1	SN: 70001-UP
12	04020-00514	• • PIN, DOWEL	2	SN: 70001-UP
13	705-42-80910	• COUPLING	1	SN: 70001-UP
14	07000-13032	• O-RING	1	SN: 70001-UP
15	01252-60825	• BOLT, HEXAGON SOCKET HEAD	2	SN: 70001-UP
16	01643-50823	• WASHER	2	SN: 70001-UP
		[C2]-PARTS WITH THIS SYMBOL ARE FOR SPECIFIC KOMATSU DEALERS. THEY CANNOT BE SUPPLIED AS INDIVIDUAL PARTS. THEY ARE SUPPLIED ONLY AS ASSEMBLY PARTS.		SN: UP

Reference: B0000-002004

Open this exact parts catalogue on K-Part

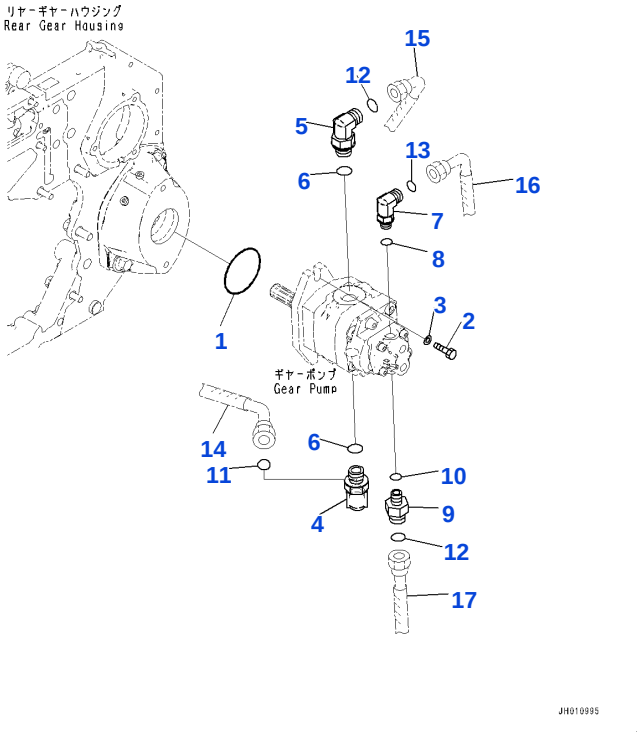

Reference: B0000-002005

B001005 ENGINE RELATED PARTS, GEAR PUMP RELATED PARTS(#70001-)

Item	Part No.	Part Name	Qty	Options
1	07000-A2065	O-RING	1	SN: 70001-UP
2	01010-81030	BOLT	2	SN: 70001-UP
3	01643-31032	WASHER	2	SN: 70001-UP
4	02782-10516	ELBOW	1	SN: 70001-UP
5	02782-10422	ELBOW	1	SN: 70001-UP
6	07002-62034	O-RING	2	SN: 70001-UP
7	02782-10311	ELBOW	1	SN: 70001-UP
8	07002-61423	O-RING	1	SN: 70001-UP
9	22N-910-1120	UNION	1	SN: 70001-UP
10	07002-61423	O-RING	1	SN: 70001-UP
11	02896-61015	O-RING	1	SN: 70001-UP
12	02896-61012	O-RING	2	SN: 70001-UP
13	02896-61009	O-RING	1	SN: 70001-UP
14	205-62-42111	HOSE ASSEMBLY (ENGINE RELATED PARTS, GENERATOR MOTOR PIPING)	-1	SN: UP
15	205-62-12120	HOSE (ENGINE RELATED PARTS, GENERATOR MOTOR PIPING)	-1	SN: UP
16	205-62-12830	HOSE (FUEL SUPPLY DEVICE PIPING)	-1	SN: UP
17	205-62-12820	HOSE (FUEL SUPPLY DEVICE PIPING)	-1	SN: UP

Reference: B0000-002005

Open this exact parts catalogue on K-Part

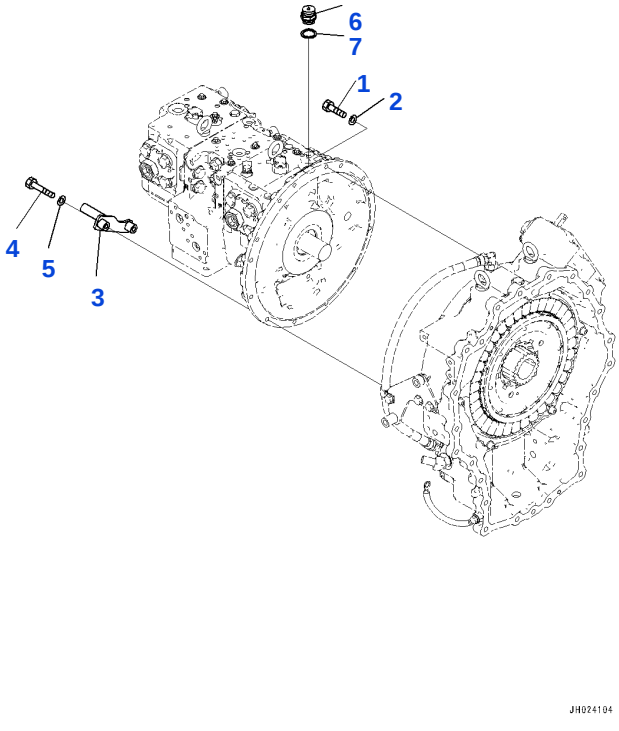

Reference: B0000-002006

B001006 ENGINE RELATED PARTS, PISTON PUMP MOUNTING (#70001-)

Item	Part No.	Part Name	Qty	Options
1	01010-81045	BOLT	12	SN: 70001-UP
2	01643-31032	WASHER	12	SN: 70001-UP
3	205-62-31380	BRACKET	1	SN: 70001-UP
4	01010-81070	BOLT	2	SN: 70001-UP
5	01643-31032	WASHER	2	SN: 70001-UP
6	22U-62-53960	BREATHER	1	SN: 70049-UP
	232-23-11220	BREATHER	1	SN: 70001-70048
7	07005-03016	SEAL, WASHER	1	SN: 70001-UP
		[A2]-INSTEAD OF PARTS WITH THIS SYMBOL, THE PARTS LISTED IN THE ROW ABOVE CAN BE USED.		SN: UP

Reference: B0000-002006

Open this exact parts catalogue on K-Part

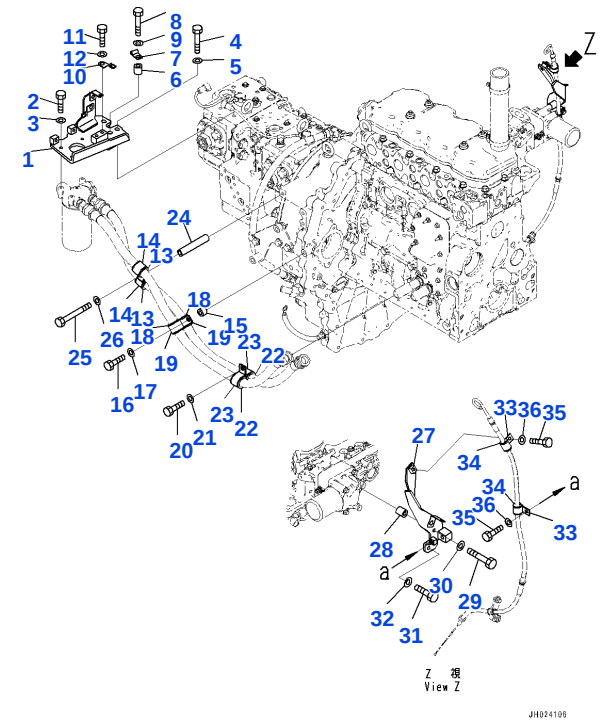

Reference: B0000-002007

B001007 ENGINE RELATED PARTS, OIL FILTER MOUNTING (#70001-)

Item	Part No.	Part Name	Qty	Options
1	205-62-15530	BRACKET	1	SN: 70001-UP
2	01010-80825	BOLT	4	SN: 70001-UP
3	01643-30823	WASHER	4	SN: 70001-UP
4	01010-81270	BOLT	2	SN: 70001-UP
5	01643-31232	WASHER	2	SN: 70001-UP
6	198-43-15310	COLLAR	1	SN: 70001-UP
7	04434-50612	CLIP	1	SN: 70001-UP
8	01010-81245	BOLT	1	SN: 70001-UP
9	01643-31232	WASHER	1	SN: 70001-UP
10	08193-20012	CLIP	1	SN: 70001-UP
11	01010-81225	BOLT	1	SN: 70001-UP
12	01643-31232	WASHER	1	SN: 70001-UP
13	07095-40627	CUSHION	2	SN: 70001-UP
14	04434-53412	CLIP	2	SN: 70001-UP
15	144-947-3490	SPACER	1	SN: 70001-UP
16	01010-81250	BOLT	1	SN: 70001-UP
17	01643-31232	WASHER	1	SN: 70001-UP
18	07095-40627	CUSHION	2	SN: 70001-UP
19	04434-53412	CLIP	2	SN: 70001-UP
20	01010-81230	BOLT	1	SN: 70001-UP
21	01643-31232	WASHER	1	SN: 70001-UP
22	07095-40627	CUSHION	2	SN: 70001-UP
23	04434-53412	CLIP	2	SN: 70001-UP
24	2A5-06-11890	SPACER	1	SN: 70001-UP
25	01011-81250	BOLT	1	SN: 70001-UP
26	01643-31232	WASHER	1	SN: 70001-UP
27	205-01-21181	BRACKET	1	SN: 70001-UP
28	23B-953-3460	SPACER	1	SN: 70001-UP
29	01010-80850	BOLT	1	SN: 70001-UP
30	01643-30823	WASHER	1	SN: 70001-UP
31	01010-80825	BOLT	1	SN: 70001-UP
32	01643-30823	WASHER	1	SN: 70001-UP
33	04434-51708	CLIP	2	SN: 70001-UP
34	07095-40211	CUSHION	2	SN: 70001-UP

Item	Part No.	Part Name	Qty	Options
35	01010-80820	BOLT	2	SN: 70001-UP
36	01643-30823	WASHER	2	SN: 70001-UP

Reference: B0000-002007

Open this exact parts catalogue on K-Part

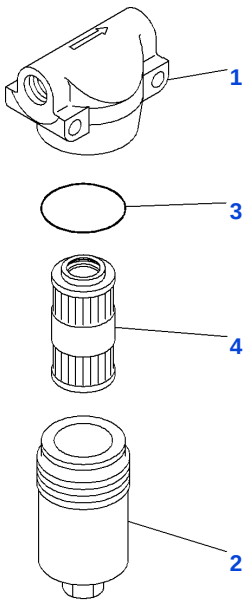

Reference: B0000-002008

B001008 ENGINE RELATED PARTS, OIL FILTER(#70001-)

Item	Part No.	Part Name	Qty	Options
	7875-10-9510	FILTER ASSEMBLY	1	SN: 70001-UP
1		• HEAD	1	SN: 70001-UP
2		• CASE	1	SN: 70001-UP
3	706-76-71390	• O-RING	1	SN: 70001-UP
4	7875-10-9740	• ELEMENT	1	SN: 70001-UP
		[C1]-PARTS WITH THIS SYMBOL CANNOT BE SUPPLIED INDIVIDUALLY. THEY ARE SUPPLIED AS ASSEMBLIES.		SN: UP

Reference: B0000-002008

Open this exact parts catalogue on K-Part

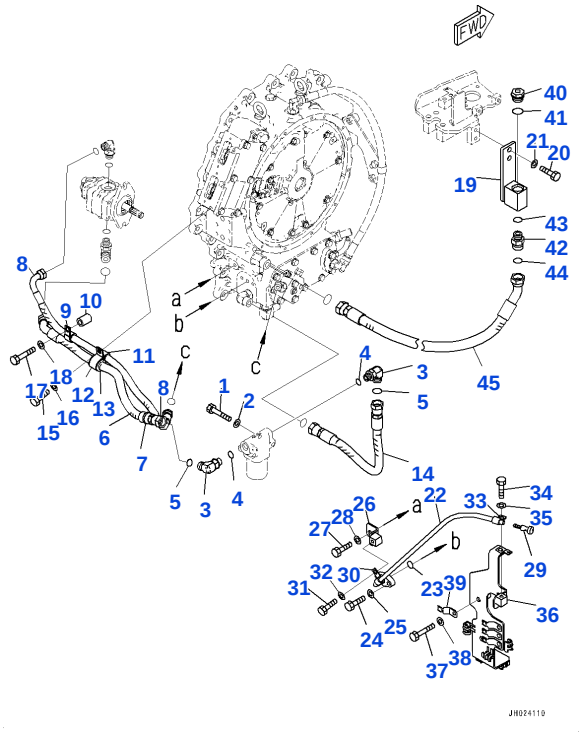

Reference: B0000-002009

B001009 ENGINE RELATED PARTS, GENERATOR MOTOR PIPING (#70001-)

Item	Part No.	Part Name	Qty	Options
1	01010-81080	BOLT	2	SN: 70001-UP
2	01643-31032	WASHER	2	SN: 70001-UP
3	02782-10516	ELBOW	2	SN: 70001-UP
4	07002-62034	O-RING	2	SN: 70001-UP
5	02896-61015	O-RING	2	SN: 70001-UP
6	205-62-42111	HOSE ASSEMBLY	1	SN: 70001-UP
7	20Y-62-22850	• BAND, GREEN	1	SN: 70001-UP
8	205-62-12120	HOSE	1	SN: 70001-UP
9	04434-52212	CLIP	1	SN: 70001-UP
10	20Y-03-11220	COLLAR	1	SN: 70001-UP
11	04434-52212	CLIP	1	SN: 70001-UP
12	04434-53212	CLIP	1	SN: 70001-UP
13	07095-40523	CUSHION	1	SN: 70001-UP
14	205-62-22830	HOSE	1	SN: 70001-UP
15	01010-81230	BOLT	1	SN: 70001-UP
16	01643-31232	WASHER	1	SN: 70001-UP
17	01010-81265	BOLT	1	SN: 70001-UP
18	01643-31232	WASHER	1	SN: 70001-UP
19	205-01-41142	BLOCK	1	SN: 70001-UP
20	01010-81235	BOLT	2	SN: 70001-UP
21	01643-31232	WASHER	2	SN: 70001-UP
22	7875-12-4860	TUBE	1	SN: 70001-UP
23	07000-B3022	O-RING	1	SN: 70001-UP
24	01010-81035	BOLT	2	SN: 70001-UP
25	01643-31032	WASHER	2	SN: 70001-UP
26	7875-12-4870	BRACKET	1	SN: 70001-UP
27	01010-81230	BOLT	1	SN: 70001-UP
28	01643-31232	WASHER	1	SN: 70001-UP
29	7875-12-4890	GAUGE	1	SN: 70001-UP
30	04434-51312	CLIP	1	SN: 70001-UP
31	01010-81230	BOLT	1	SN: 70001-UP
32	01643-31232	WASHER	1	SN: 70001-UP
33	04434-51312	CLIP	1	SN: 70001-UP
34	01010-81225	BOLT	1	SN: 70001-UP

Open this exact parts catalogue on K-Part

Get the complete PDF catalogue

Komatsu HB205LC-3 (JPN) S/N 70001-70999 (Japanese)

$89

with PayPal | Store cart: $99

Buy this PDF on Manuals Komatsu

Check the model, serial range and language before payment.

Download instructions are emailed after payment confirmation.

This free sample contains 10 catalogue pages.