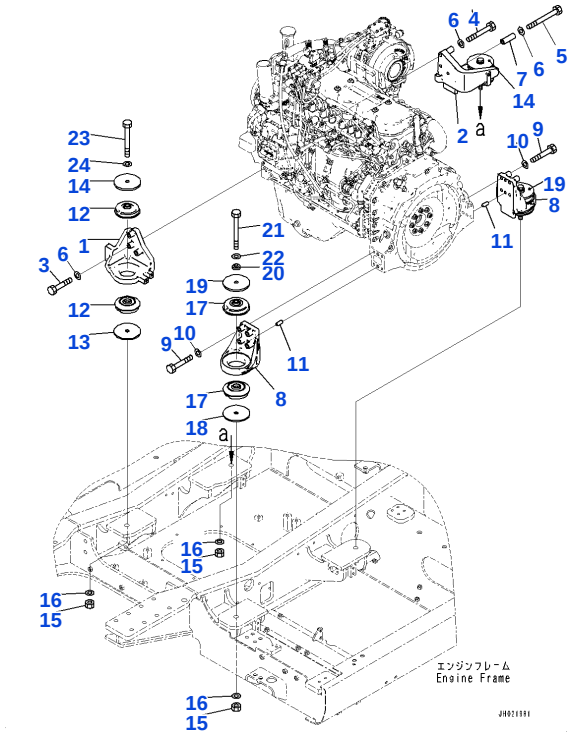

Reference: B0100-001001

B001001 ENGINE MOUNTING, BRACKET, CUSHION (#2001-)

Item	Part No.	Part Name	Qty	Options
1	2A5-01-11880	BRACKET	1	SN: 2001-UP
2	2A6-01-11121	BRACKET	1	SN: 2001-UP
3	2A5-01-11230	BOLT	3	SN: 2001-UP
4	2A6-01-11130	BOLT	2	SN: 2001-UP
5	2A6-01-11650	BOLT	1	SN: 2001-UP
6	01643-31232	WASHER	6	SN: 2001-UP
7	2A6-01-11680	SPACER	1	SN: 2001-UP
8	2A5-01-11910	BRACKET	2	SN: 2001-UP
9	2A5-01-11230	BOLT	8	SN: 2001-UP
10	01643-31232	WASHER	8	SN: 2001-UP
11	04020-01228	PIN, DOWEL	4	SN: 2001-UP
12	2A5-01-11320	CUSHION	4	SN: 2001-UP
13	2A5-01-11261	PLATE	2	SN: 2001-UP
14	2A5-01-11271	PLATE	2	SN: 2001-UP
15	01580-11613	NUT	3	SN: 2001-UP
16	01643-31645	WASHER	3	SN: 2001-UP
17	2A6-01-11710	CUSHION	4	SN: 2001-UP
18	2A5-01-11261	PLATE	2	SN: 2001-UP
19	2A5-01-11271	PLATE	2	SN: 2001-UP
20	2A5-01-11590	PLATE	2	SN: 2001-UP
21	01011-81655	BOLT	2	SN: 2001-UP
22	01643-31645	WASHER	2	SN: 2001-UP
23	20Y-01-12270	BOLT	2	SN: 2001-UP
24	01643-31645	WASHER	2	SN: 2001-UP

Reference: B0100-001001

Open this exact parts catalogue on K-Part

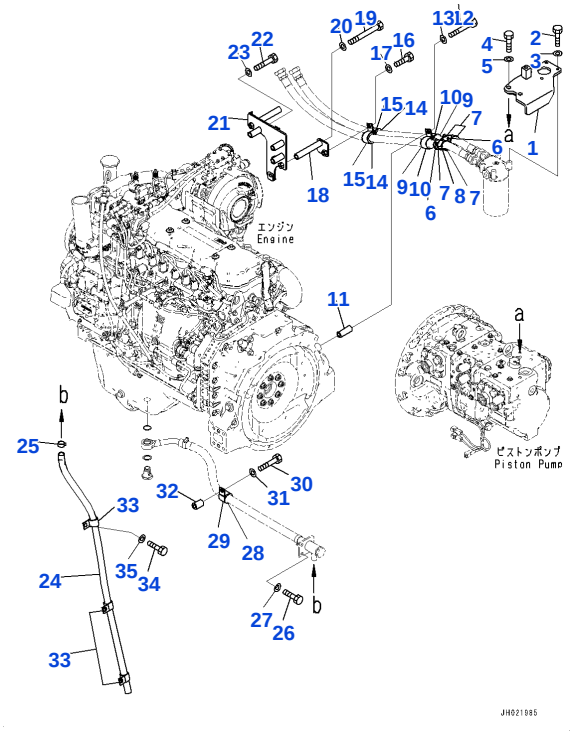

Reference: B0100-001002

B001002 ENGINE MOUNTING, OIL FILTER RELATED PARTS(#2001-)

Item	Part No.	Part Name	Qty	Options
1	8240-01-6360	BRACKET	1	SN: 2001-UP
2	01010-80825	BOLT	4	SN: 2001-UP
3	01643-30823	WASHER	4	SN: 2001-UP
4	01010-81235	BOLT	2	SN: 2001-UP
5	01643-31232	WASHER	2	SN: 2001-UP
6	20Y-01-41250	COVER	2	SN: 2001-UP
7	08034-20536	BAND	4	SN: 2001-UP
8	08034-20536	BAND	1	SN: 2001-UP
9	07095-40627	CUSHION	2	SN: 2001-UP
10	04434-53412	CLIP	2	SN: 2001-UP
11	175-61-17240	COLLAR	1	SN: 2001-UP
12	01010-81295	BOLT	1	SN: 2001-UP
13	01643-31232	WASHER	1	SN: 2001-UP
14	07095-40627	CUSHION	2	SN: 2001-UP
15	04434-53412	CLIP	2	SN: 2001-UP
16	01010-81230	BOLT	1	SN: 2001-UP
17	01643-31232	WASHER	1	SN: 2001-UP
18	2A5-62-13451	BRACKET	1	SN: 2001-UP
19	01011-81255	BOLT	1	SN: 2001-UP
20	01643-31232	WASHER	1	SN: 2001-UP
21	2A5-06-11331	BRACKET	1	SN: 2001-UP
22	01010-81280	BOLT	3	SN: 2001-UP
23	01643-31232	WASHER	3	SN: 2001-UP
24	07287-01910	HOSE	1	SN: 2001-UP
25	07285-00220	CLIP	1	SN: 2001-UP
26	01010-81030	BOLT	2	SN: 2001-UP
27	01643-31032	WASHER	2	SN: 2001-UP
28	198-06-53630	CUSHION	1	SN: 2001-UP
29	04434-53412	CLIP	1	SN: 2001-UP
30	01010-81260	BOLT	1	SN: 2001-UP
31	01643-31232	WASHER	1	SN: 2001-UP
32	20Y-03-11220	COLLAR	1	SN: 2001-UP
33	04434-52512	CLIP	3	SN: 2001-UP
34	01010-81225	BOLT	3	SN: 2001-UP

Open this exact parts catalogue on K-Part

Item	Part No.	Part Name	Qty	Options
35	01643-31232	WASHER	3	SN: 2001-UP

Reference: B0100-001002

Open this exact parts catalogue on K-Part

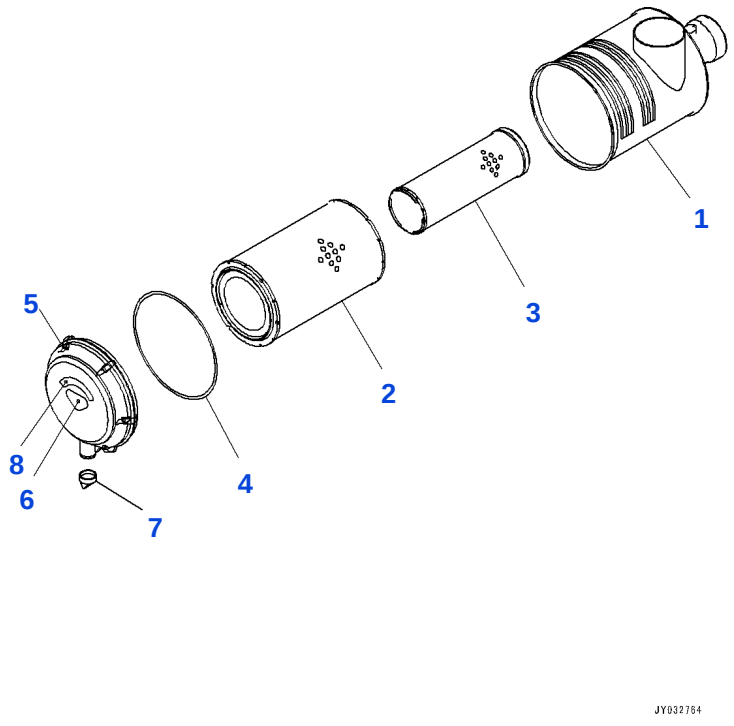

Reference: B0200-001001

B002001 AIR CLEANER, AIR CLEANER COMPONENT PARTS (#2001-)

Item	Part No.	Part Name	Qty	Options
1	6755-81-7900	AIR CLEANER ASSEMBLY	1	SN: 2001-UP
	600-185-3200	• ELEMENT ASSEMBLY	1	SN: 2001-UP
2	600-185-3110	• • ELEMENT, OUTER	1	SN: 2001-UP
3		• • ELEMENT, INNER	1	SN: 2001-UP
4	600-184-1370	• • O-RING	1	SN: 2001-UP
5	600-184-1310	• COVER ASSEMBLY	1	SN: 2001-UP
6	600-184-2810	• • PLATE, MARK, TOP	1	SN: 2001-UP
7	600-184-1350	• VALVE, VACUATOR	1	SN: 2001-UP
8	600-181-1930	• PLATE, AIR CLEANER CLEANING COUNT SEAL	1	SN: 2001-UP
		[C1]-PARTS WITH THIS SYMBOL CANNOT BE SUPPLIED INDIVIDUALLY. THEY ARE SUPPLIED AS ASSEMBLIES.		SN: UP

Reference: B0200-001001

Open this exact parts catalogue on K-Part

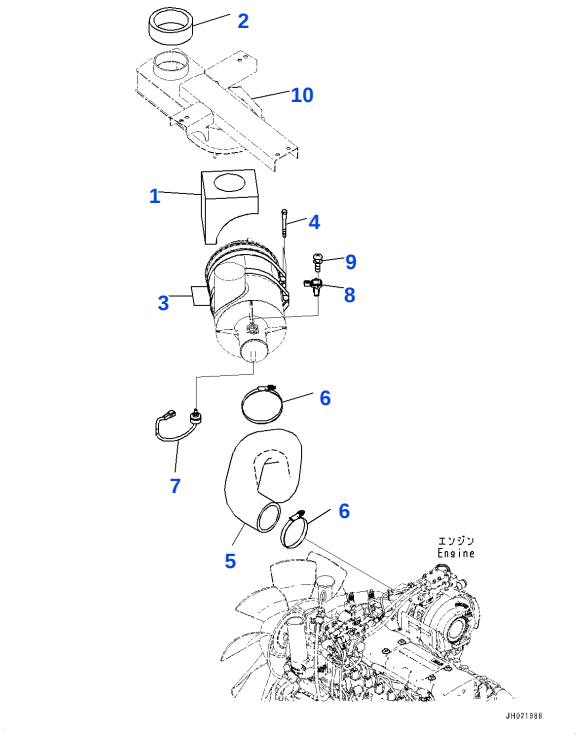

Reference: B0200-001002

B002002 AIR CLEANER, AIR CLEANER MOUNTING(#2001-)

Item	Part No.	Part Name	Qty	Options
1	8255-01-6140	SEAL	1	SN: 2001-UP
2	8240-01-6450	SEAL	1	SN: 2001-UP
3	6131-11-4520	BAND	2	SN: 2001-UP
4	6643-11-4641	BOLT	2	SN: 2001-UP
5	8255-01-6120	HOSE	1	SN: 2001-UP
6	07299-00120	CLAMP	2	SN: 2001-UP
7	7861-93-1430	SENSOR, DUST INDICATOR	1	SN: 2001-UP
8	6252-81-7800	SENSOR AIRFLOW	1	SN: 2001-UP
	6252-81-7900	SENSOR AIRFLOW	1	SN: 2001-2139
	6252-81-7910	• O-RING	1	SN: 2001-UP
9	01023-10412	SCREW	2	SN: 2001-UP
		[B1]-INDICATES PART WITH DISCONTINUED SUPPLY. THE PART SHOWN IN THE LINE ABOVE IS SUPPLIED INSTEAD OF THIS PART.		SN: UP

Reference: B0200-001002

Open this exact parts catalogue on K-Part

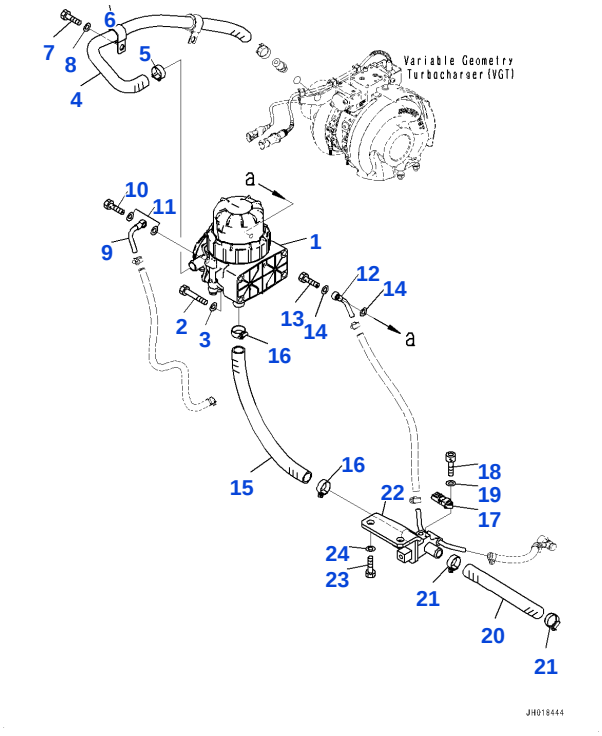

Reference: B0200-001003

B002003 AIR CLEANER, KOMATSU CLOSED CRANKCASE VENTILATION (KCCV)(#2001-)

Item	Part No.	Part Name	Qty	Options
1	600-332-2211	VENTILATOR	1	SN: 2001-UP
	600-331-2900	• ELEMENT KIT	1	SN: 2001-UP
2	01010-81070	BOLT	4	SN: 2001-UP
3	01643-31032	WASHER	4	SN: 2001-UP
4	22U-01-41250	HOSE	1	SN: 2001-UP
5	07281-00419	CLAMP, HOSE	1	SN: 2147-UP
	07281-00359	CLAMP, HOSE	1	SN: 2001-2146
6	2A5-01-11210	CLIP	1	SN: 2001-UP
7	01010-81230	BOLT	1	SN: 2001-UP
8	01643-31232	WASHER	1	SN: 2001-UP
9	6746-21-7460	JOINT	1	SN: 2001-UP
10	07206-30812	BOLT, JOINT	1	SN: 2001-UP
11	07005-01212	SEAL, WASHER	2	SN: 2001-UP
12	6755-21-7240	JOINT	1	SN: 2001-UP
13	07206-30812	BOLT, JOINT	1	SN: 2001-UP
14	07005-01212	SEAL, WASHER	2	SN: 2001-UP
15	6755-21-7290	HOSE	1	SN: 2001-UP
16	07281-00359	CLAMP, HOSE	2	SN: 2001-UP
17	6252-11-2901	SENSOR, PRESSURE, CRANKCASE	1	SN: 2050-UP
	6252-11-2900	SENSOR, PRESSURE, CRANKCASE	1	SN: 2001-2049
	6252-11-2800	• O-RING	1	SN: 2001-UP
18	600-331-1930	BOLT	1	SN: 2001-UP
19	01640-20508	WASHER	1	SN: 2001-UP
20	6755-21-7310	HOSE	1	SN: 2001-UP
21	07281-00359	CLAMP, HOSE	2	SN: 2001-UP
22	2A6-01-11391	BRACKET	1	SN: 2001-UP
23	01010-81230	BOLT	2	SN: 2001-UP
24	01643-31232	WASHER	2	SN: 2001-UP
		[A1]-PARTS WITH THIS SYMBOL AND THE PARTS LISTED IN THE ROW DIRECTLY ABOVE CAN BE USED INTERCHANGEABLY.		SN: UP

Open this exact parts catalogue on K-Part

Item	Part No.	Part Name	Qty	Options
		[A2]-INSTEAD OF PARTS WITH THIS SYMBOL, THE PARTS LISTED IN THE ROW ABOVE CAN BE USED.		SN: UP

Reference: B0200-001003

Open this exact parts catalogue on K-Part

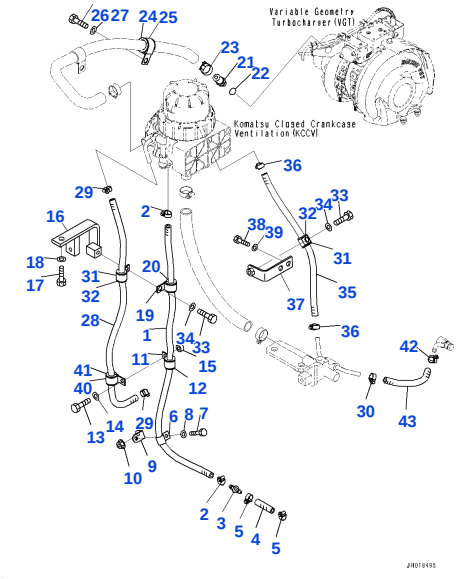

Reference: B0200-001004

B002004 AIR CLEANER, KOMATSU CLOSED CRANKCASE VENTILATION (KCCV) PIPING(#2001-2161)

Item	Part No.	Part Name	Qty	Options
1	2A6-01-11511	HOSE	1	SN: 2001-@
2	11Y-09-11140	CLIP	2	SN: 2162-@
	07281-00197	CLAMP	2	SN: 2001-2161
3	6261-51-2810	VALVE, CHECK	1	SN: 2001-@
4	07260-20906	HOSE	1	SN: 2001-@
5	11Y-09-11140	CLIP	2	SN: 2162-@
	07281-00197	CLAMP	2	SN: 2001-2161
6	04434-51608	CLIP	1	SN: 2001-@
7	01010-80825	BOLT	1	SN: 2001-@
8	01643-30823	WASHER	1	SN: 2001-@
9	6755-21-7150	BRACKET	1	SN: 2001-@
10	01584-00806	NUT	1	SN: 2001-@
11	04434-52310	CLIP	1	SN: 2001-@
12	2A5-01-11580	CUSHION	1	SN: 2001-@
13	01010-80825	BOLT	1	SN: 2001-@
14	01643-30823	WASHER	1	SN: 2001-@
15	22N-957-1420	COLLAR	1	SN: 2001-@
16	2A6-01-11551	BRACKET	1	SN: 2001-@
17	01010-81230	BOLT	1	SN: 2001-@
18	01643-31232	WASHER	1	SN: 2001-@
19	04434-52312	CLIP	1	SN: 2001-@
20	2A5-01-11580	CUSHION	1	SN: 2001-@
21	6755-21-7121	JOINT	1	SN: 2001-@
22	6755-21-7110	O-RING	1	SN: 2001-@
23	07281-00289	CLAMP	1	SN: 2001-@
24	04434-53412	CLIP	1	SN: 2001-@
25	07095-40627	CUSHION	1	SN: 2001-@
26	01010-81230	BOLT	1	SN: 2001-@
27	01643-31232	WASHER	1	SN: 2001-@
28	2A6-01-11850	HOSE	1	SN: 2094-@
	2A6-01-11521	HOSE	1	SN: 2001-2093
29	11Y-09-11140	CLIP	2	SN: 2162-@
	07281-00197	CLAMP	2	SN: 2001-2161
30	11Y-09-11140	CLIP	1	SN: 2162-@
	07281-00197	CLAMP	1	SN: 2001-2161
31	04434-52312	CLIP	2	SN: 2001-@
32	2A5-01-11580	CUSHION	2	SN: 2001-@
33	01010-81230	BOLT	2	SN: 2001-@
34	01643-31232	WASHER	2	SN: 2001-@
35	2A6-01-11860	HOSE	1	SN: 2094-@
	6755-21-7430	HOSE	1	SN: 2001-2093
36	11Y-09-11140	CLIP	2	SN: 2162-@
	07281-00197	CLAMP	2	SN: 2001-2161
37	2A6-01-11561	BRACKET	1	SN: 2001-@
38	01010-81230	BOLT	2	SN: 2001-@
39	01643-31232	WASHER	2	SN: 2001-@

Item	Part No.	Part Name	Qty	Options
40	04434-52310	CLIP	1	SN: 2001-@
41	2A5-01-11580	CUSHION	1	SN: 2001-@
42	11Y-09-11140	CLIP	1	SN: 2162-@
	07281-00197	CLAMP	1	SN: 2001-2161
43	6252-21-7720	HOSE	1	SN: 2001-@
		[A1]-PARTS WITH THIS SYMBOL AND THE PARTS LISTED IN THE ROW DIRECTLY ABOVE CAN BE USED INTERCHANGEABLY.		SN: UP
		[A2]-INSTEAD OF PARTS WITH THIS SYMBOL, THE PARTS LISTED IN THE ROW ABOVE CAN BE USED.		SN: UP

Reference: B0200-001004

Open this exact parts catalogue on K-Part

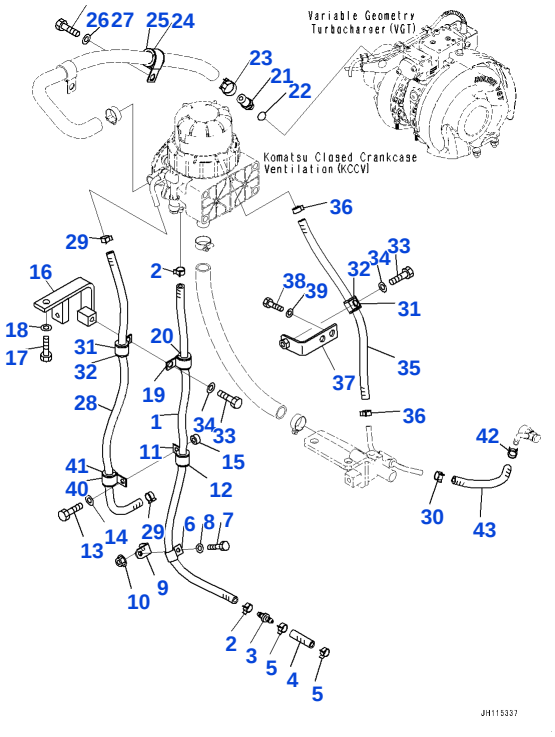

Reference: B0200-001004A

B002005 AIR CLEANER, KOMATSU CLOSED CRANKCASE VENTILATION (KCCV) PIPING(#2162-)

Item	Part No.	Part Name	Qty	Options
1	2A6-01-11511	HOSE	1	SN: 2001-UP
2	11Y-09-11140	CLIP	2	SN: 2162-UP
3	6261-51-2810	VALVE, CHECK	1	SN: 2001-UP
4	07260-20906	HOSE	1	SN: 2001-UP
5	11Y-09-11140	CLIP	2	SN: 2162-UP
6	04434-51608	CLIP	1	SN: 2001-UP
7	01010-80825	BOLT	1	SN: 2001-UP
8	01643-30823	WASHER	1	SN: 2001-UP
9	6755-21-7150	BRACKET	1	SN: 2001-UP
10	01584-00806	NUT	1	SN: 2001-UP
11	04434-52310	CLIP	1	SN: 2001-UP
12	2A5-01-11580	CUSHION	1	SN: 2001-UP
13	01010-80825	BOLT	1	SN: 2001-UP
14	01643-30823	WASHER	1	SN: 2001-UP
15	22N-957-1420	COLLAR	1	SN: 2001-UP
16	2A6-01-11551	BRACKET	1	SN: 2001-UP
17	01010-81230	BOLT	1	SN: 2001-UP
18	01643-31232	WASHER	1	SN: 2001-UP
19	04434-52312	CLIP	1	SN: 2001-UP
20	2A5-01-11580	CUSHION	1	SN: 2001-UP
21	6755-21-7121	JOINT	1	SN: 2001-UP
22	6755-21-7110	O-RING	1	SN: 2001-UP
23	07281-00289	CLAMP	1	SN: 2001-UP
24	04434-53412	CLIP	1	SN: 2001-UP
25	07095-40627	CUSHION	1	SN: 2001-UP
26	01010-81230	BOLT	1	SN: 2001-UP
27	01643-31232	WASHER	1	SN: 2001-UP
28	2A6-01-11850	HOSE	1	SN: 2094-UP
29	11Y-09-11140	CLIP	2	SN: 2162-UP
30	11Y-09-11140	CLIP	1	SN: 2162-UP
31	04434-52312	CLIP	2	SN: 2001-UP
32	2A5-01-11580	CUSHION	2	SN: 2001-UP
33	01010-81230	BOLT	2	SN: 2001-UP

Get the complete PDF catalogue

Komatsu BZ210-3 (JPN) S/N 2001-2999 (Japanese)

$89

with PayPal | Store cart: $99

Buy this PDF on Manuals Komatsu

Check the model, serial range and language before payment.

Download instructions are emailed after payment confirmation.

This free sample contains 10 catalogue pages.