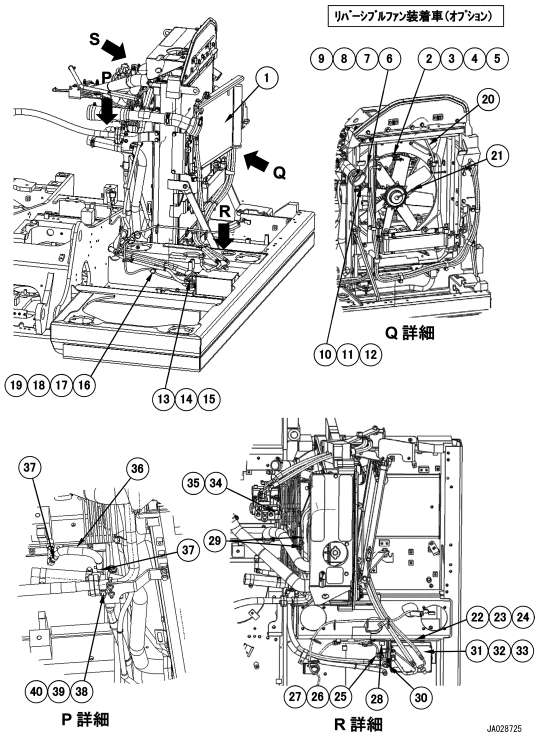

Reference: C0100-005001

C001001 COOLING SYSTEM - AIR CONDITIONER, (1/2)(#90054-)

Item	Part No.	Part Name	Qty	Options
1	2A3-958-1300	COOLING ASSEMBLY	1	SN: 90054-UP
2	20Y-979-6191	SENSOR, TEMPERATURE	1	SN: 90054-UP
3	20Y-979-6271	BRACKET	1	SN: 90054-UP
4	01010-80616	BOLT	1	SN: 90054-UP
5	01643-30623	WASHER	1	SN: 90054-UP
6	2A3-912-4270	WIRING HARNESS	1	SN: 90054-UP
7	04434-50812	CLIP	2	SN: 90054-UP
8	01010-81220	BOLT	2	SN: 90054-UP
9	01643-31232	WASHER	2	SN: 90054-UP
10	2A3-912-4310	BRACKET	1	SN: 90054-UP
11	01010-80616	BOLT	1	SN: 90054-UP
12	01643-30623	WASHER	1	SN: 90054-UP
13	04434-51012	CLIP	1	SN: 90054-UP
14	01010-81225	BOLT	1	SN: 90054-UP
15	01643-31232	WASHER	1	SN: 90054-UP
16	07095-20211	CUSHION	1	SN: 90054-UP
17	04434-51712	CLIP	1	SN: 90054-UP
18	01010-81225	BOLT	1	SN: 90054-UP
19	01643-31232	WASHER	1	SN: 90054-UP
20	2A3-912-1791	HOSE	1	SN: 90054-UP
21	07281-00137	CLAMP	1	SN: 90054-UP
22	2A3-912-1880	BRACKET	1	SN: 90054-UP
23	01010-81220	BOLT	4	SN: 90054-UP
24	01643-31232	WASHER	4	SN: 90054-UP
25	04434-51012	CLIP	1	SN: 90054-UP
26	01010-81225	BOLT	1	SN: 90054-UP
27	01643-31232	WASHER	1	SN: 90054-UP
28	569-06-61960	RELAY	1	SN: 90054-UP
29	07281-00137	CLAMP	2	SN: 90054-UP
30	07281-00137	CLAMP	1	SN: 90054-UP
31	22B-Z59-1393	CONTROLLER, FAN	1	SN: 91301-UP
	22B-Z59-1390	CONTROLLER, FAN	1	SN: 90054-91300
32	01010-80612	BOLT	4	SN: 90054-UP
33	01643-30623	WASHER	4	SN: 90054-UP

Open this exact parts catalogue on K-Part

Item	Part No.	Part Name	Qty	Options
34	08191-00770	PLUG, CONNECTOR	6	SN: 90054-UP
35	08192-26100	CONNECTOR	1	SN: 90054-UP
36	2A3-912-1850	HOSE	1	SN: 90054-UP
37	11Y-09-11160	CLIP	2	SN: 90054-UP
38	2A3-912-1861	JOINT	1	SN: 90054-UP
39	01010-81025	BOLT	2	SN: 90054-UP
40	01643-31032	WASHER	2	SN: 90054-UP

Reference: C0100-005001

Open this exact parts catalogue on K-Part

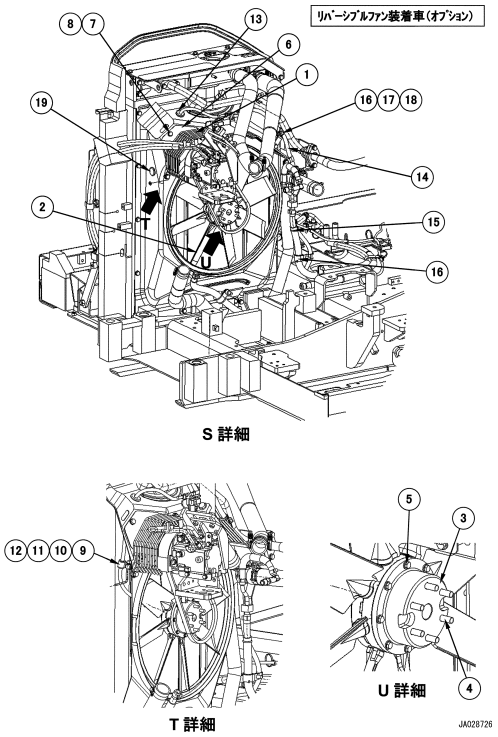

Reference: C0100-005002

C001002 COOLING SYSTEM - AIR CONDITIONER, (2/2)(#90054-)

Item	Part No.	Part Name	Qty	Options
1	2A3-912-1762	GUARD	1	SN: 90054-UP
2	2A3-958-1550	FAN	1	SN: 90054-UP
3	2A3-912-1780	FLANGE	1	SN: 90054-UP
4	01252-71055	BOLT, WITH HEX SOCKET HOLE	6	SN: 90054-UP
5	22B-Z59-1430	BOLT	8	SN: 90054-UP
6	2A3-912-1840	PLATE	1	SN: 90054-UP
7	01010-81020	BOLT	3	SN: 90054-UP
8	01643-31032	WASHER	3	SN: 90054-UP
9	07095-40213	CUSHION	1	SN: 90054-UP
10	04434-51912	CLIP	1	SN: 90054-UP
11	01010-81030	BOLT	1	SN: 90054-UP
12	01643-31032	WASHER	1	SN: 90054-UP
13	125-06-22250	CAP	1	SN: 90054-UP
14	2A3-912-1821	HOSE	1	SN: 90054-UP
15	08034-40521	BAND	1	SN: 90054-UP
16	04434-51712	CLIP	3	SN: 90054-UP
17	01010-81020	BOLT	2	SN: 90054-UP
18	01643-31032	WASHER	2	SN: 90054-UP
19	09415-02512	CAP	1	SN: 90054-UP
	22B-Z59-8450	SERVICE KIT, REVERSIBLE FAN, SEAL KIT FOR MAIN UNIT	1	SN: 90054-UP
	22B-Z59-8870	SERVICE KIT, REVERSIBLE FAN, AIR FILTER FOR CONTROLLER (VER3)	1	SN: 91301-UP
	22B-Z59-8460	SERVICE KIT, REVERSIBLE FAN, AIR FILTER FOR CONTROLLER (VER2)	1	SN: 90054-91300

Reference: C0100-005002

Open this exact parts catalogue on K-Part

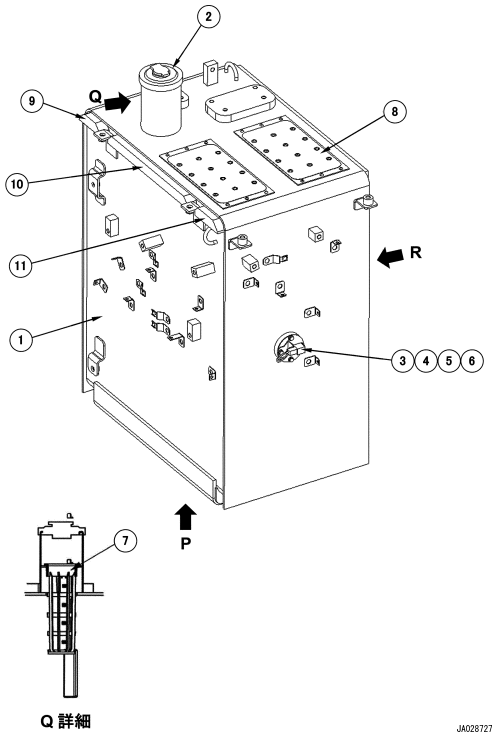

Reference: D0100-007001

D001001 FUEL TANK, (1/2)(#90054-)

Item	Part No.	Part Name	Qty	Options
1	2A3-04-11111	TANK	1	SN: 90054-UP
2	20Y-04-11162	CAP	1	SN: 90054-UP
3	2A5-06-11391	SENSOR, FUEL LEVEL	1	SN: 90054-UP
4	07000-13050	O-RING	1	SN: 90054-UP
5	01010-80612	BOLT	4	SN: 90054-UP
6	01643-30623	WASHER	4	SN: 90054-UP
7	22U-04-21241	STRAINER ASSEMBLY	1	SN: 90054-UP
8	203-00-11920	PLATE	2	SN: 90054-UP
9	2A3-958-1280	SHEET	1	SN: 90054-UP
10	2A3-958-1270	SHEET	1	SN: 90054-UP
11	2A3-958-1290	SHEET	1	SN: 90054-UP

Reference: D0100-007001

Open this exact parts catalogue on K-Part

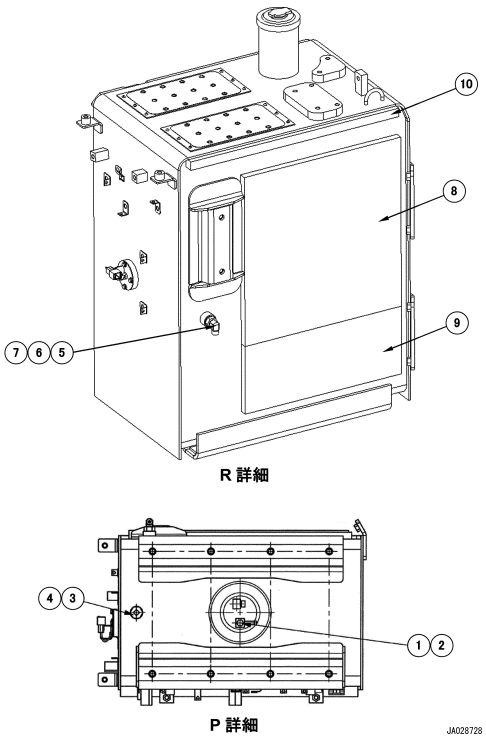

Reference: D0100-007002

D001002 FUEL TANK, (2/2)(#90054-)

Item	Part No.	Part Name	Qty	Options
1	07040-11007	PLUG	1	SN: 90054-UP
2	07002-11023	O-RING	1	SN: 90054-UP
3	07040-12412	PLUG	1	SN: 90054-UP
4	07002-12434	O-RING	1	SN: 90054-UP
5	02782-10315	ERBO	1	SN: 90054-UP
6	07002-12034	O-RING	1	SN: 90054-UP
7	02896-11009	O-RING	1	SN: 90054-UP
8	2A3-04-11182	SHEET	1	SN: 90054-UP
9	2A3-04-11280	SHEET	1	SN: 90054-UP
10	2A3-912-3771	SHEET	1	SN: 90100-UP
	2A3-912-3770	SHEET	1	SN: 90054-90099

Reference: D0100-007002

Open this exact parts catalogue on K-Part

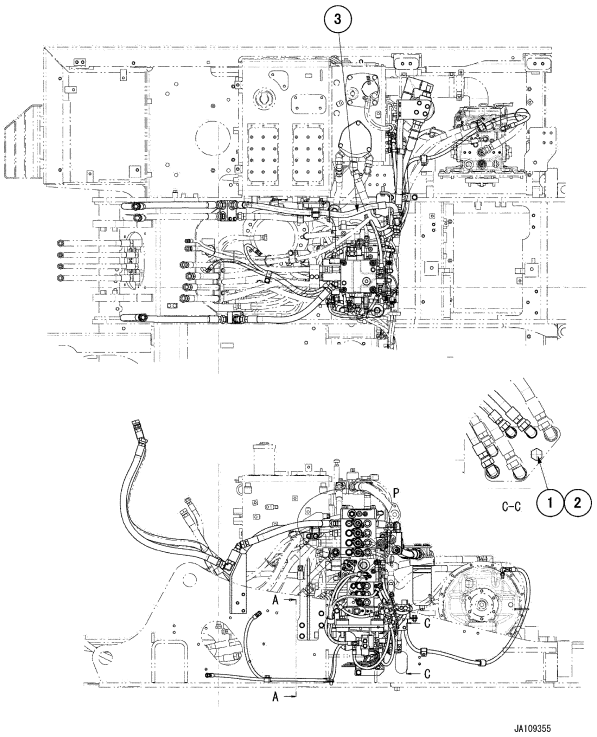

Reference: H0120-019001

H001001 CONTROL VALVE, (1/2)(#90054-)

Item	Part No.	Part Name	Qty	Options
1	02789-10210	PLUG, FACE SEAL	1	SN: 90054-UP
2	07002-11423	O-RING	1	SN: 90054-UP
3	2A3-958-1970	HOSE	1	SN: 90054-UP

Reference: H0120-019001

Open this exact parts catalogue on K-Part

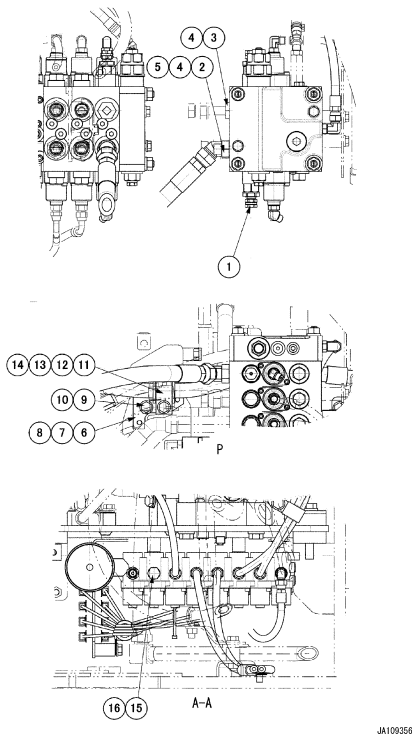

Reference: H0120-019002

H001002 CONTROL VALVE, (2/2)(#90054-)

Item	Part No.	Part Name	Qty	Options
1	723-90-61400	VALVE ASSEMBLY, SUCTION RELIEF	1	SN: 90054-UP
2	02783-10628	ERBO	1	SN: 90054-UP
3	07040-12412	PLUG	1	SN: 90054-UP
4	07002-62434	O-RING	2	SN: 90054-UP
5	02896-61018	O-RING	1	SN: 90054-UP
6	22B-Z58-2960	PLATE	1	SN: 90054-UP
7	01010-81035	BOLT	3	SN: 90054-UP
8	01643-31032	WASHER	3	SN: 90054-UP
9	01010-81220	BOLT	1	SN: 90054-UP
10	01643-31232	WASHER	1	SN: 90054-UP
11	425-62-42640	CLAMP	2	SN: 90054-UP
12	07095-00628	CUSHION	1	SN: 90054-UP
13	01010-81270	BOLT	1	SN: 90054-UP
14	01643-31232	WASHER	1	SN: 90054-UP
15	07002-11423	O-RING	1	SN: 90054-UP
16	07040-11409	PLUG	1	SN: 90054-UP

Reference: H0120-019002

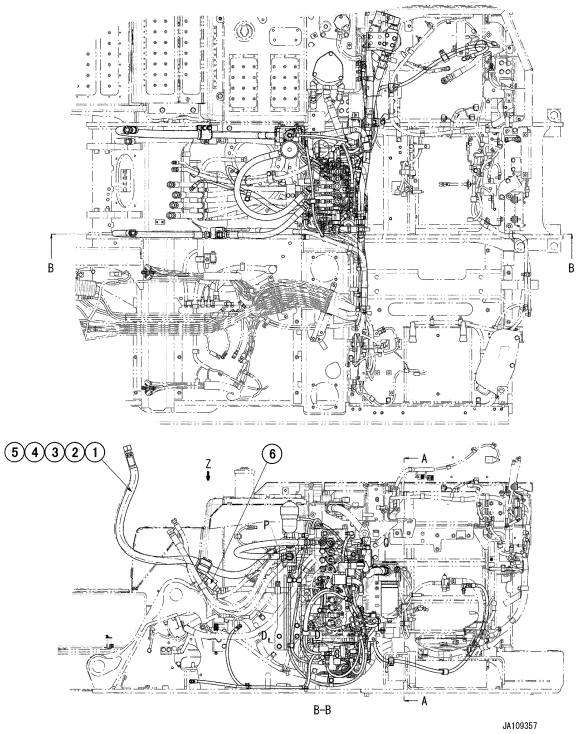

Reference: H0330-004001

H002001 RETURN PIPING, (1/4)(#90054-)

Item	Part No.	Part Name	Qty	Options
1	2A3-958-3160	HOSE	1	SN: 90054-UP
2	07000-13032	O-RING	1	SN: 90054-UP
3	07371-31049	FLANGE, SPLIT	2	SN: 90054-UP
4	07372-21035	BOLT	4	SN: 90054-UP
5	01643-51032	WASHER	4	SN: 90054-UP
6	2A3-958-3150	BLOCK	1	SN: 90054-UP

Reference: H0330-004001

Open this exact parts catalogue on K-Part

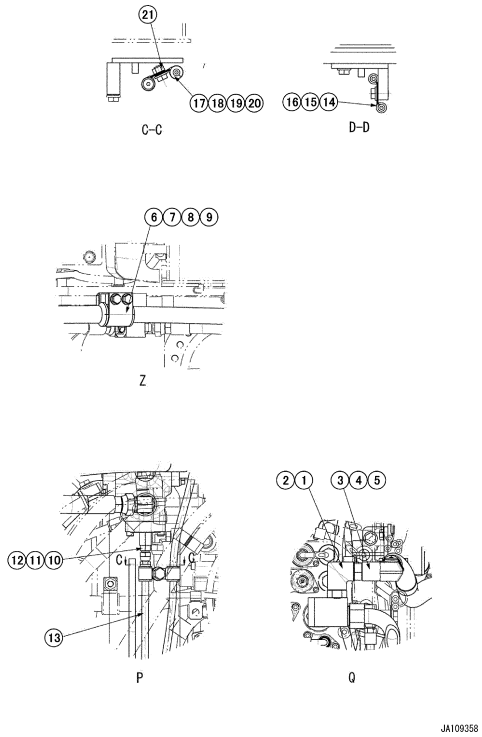

Reference: H0330-004002

H002002 RETURN PIPING, (2/4)(#90054-)

Item	Part No.	Part Name	Qty	Options
1	11T-61-12211	ERBO	1	SN: 90054-UP
2	07002-12434	O-RING	1	SN: 90054-UP
3	23H-60-12120	ERBO	1	SN: 90054-UP
4	07002-12434	O-RING	1	SN: 90054-UP
5	207-62-64740	O-RING	1	SN: 90054-UP
6	07094-11024	CLAMP	2	SN: 90054-UP
7	07095-01034	CUSHION	1	SN: 90054-UP
8	01010-81280	BOLT	2	SN: 90054-UP
9	01643-31232	WASHER	2	SN: 90054-UP
10	02781-0021D	UNION	1	SN: 90054-UP
11	07002-11423	O-RING	1	SN: 90054-UP
12	02896-11008	O-RING	1	SN: 90054-UP
13	2A3-958-2861	HOSE	1	SN: 90054-UP
14	04434-51312	CLIP	2	SN: 90054-UP
15	01010-81225	BOLT	1	SN: 90054-UP
16	01643-31232	WASHER	1	SN: 90054-UP
17	04434-51912	CLIP	2	SN: 90054-UP
18	07095-20213	CUSHION	2	SN: 90054-UP
19	01010-81220	BOLT	1	SN: 90054-UP
20	01643-31232	WASHER	1	SN: 90054-UP
21	01580-11210	NAT	1	SN: 90054-UP

Reference: H0330-004002

Open this exact parts catalogue on K-Part

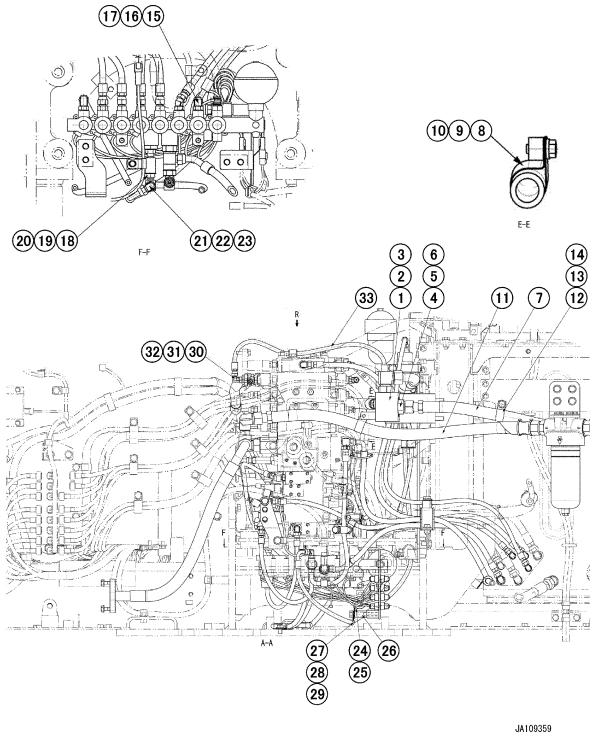

Reference: H0330-004003

H002003 RETURN PIPING, (3/4)(#90054-)

Item	Part No.	Part Name	Qty	Options
1	2A3-958-1820	BLOCK	1	SN: 90054-UP
2	01010-81025	BOLT	2	SN: 90054-UP
3	01643-31032	WASHER	2	SN: 90054-UP
4	207-62-72110	UNION	1	SN: 90054-UP
5	07002-13334	O-RING	1	SN: 90054-UP
6	207-62-64740	O-RING	1	SN: 90054-UP
7	2A3-958-1750	HOSE	1	SN: 90054-UP
8	281-01-13180	CLIP	1	SN: 90054-UP
9	01010-81025	BOLT	1	SN: 90054-UP
10	01643-31032	WASHER	1	SN: 90054-UP
11	2A3-958-1760	HOSE	1	SN: 90054-UP
12	281-01-13180	CLIP	1	SN: 90054-UP
13	01010-81230	BOLT	1	SN: 90054-UP
14	01643-31232	WASHER	1	SN: 90054-UP
15	22B-62-21381	ERBO	1	SN: 90054-UP
16	07002-11423	O-RING	1	SN: 90054-UP
17	02896-11008	O-RING	1	SN: 90054-UP
18	56D-43-27390	ERBO	1	SN: 90054-UP
19	07002-11423	O-RING	1	SN: 90054-UP
20	02896-11009	O-RING	1	SN: 90054-UP
21	22B-62-21381	ERBO	1	SN: 90054-UP
22	07002-11423	O-RING	1	SN: 90054-UP
23	02896-11008	O-RING	1	SN: 90054-UP
24	04434-53412	CLIP	1	SN: 90054-UP
25	07095-20627	CUSHION	1	SN: 90054-UP
26	2A3-62-13471	COLOR	1	SN: 90054-UP
27	04434-51312	CLIP	1	SN: 90054-UP
28	01010-81265	BOLT	1	SN: 90054-UP
29	01643-31232	WASHER	1	SN: 90054-UP
30	02782-10210	ERBO	1	SN: 90054-UP
31	07002-11423	O-RING	1	SN: 90054-UP
32	02896-11008	O-RING	1	SN: 90054-UP
33	2A3-958-2870	HOSE	1	SN: 90054-UP

Open this exact parts catalogue on K-Part

Get the complete PDF catalogue

Komatsu PC120-11 (JPN) FORESTRY SP SPEC MACHINE S/N 90054-UP (JAPANESE)

$89

with PayPal | Store cart: $99

Buy this PDF on Manuals Komatsu

Check the model, serial range and language before payment.

Download instructions are emailed after payment confirmation.

This free sample contains 10 catalogue pages.