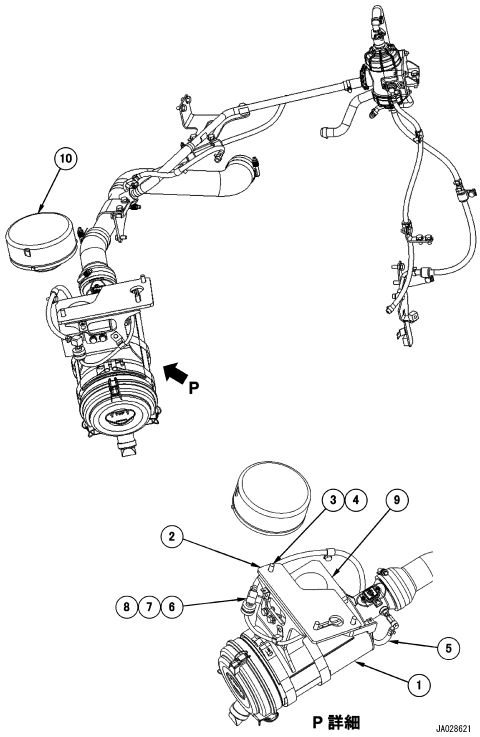

Reference: B0200-003001

B001001 AIR CLEANER, (#90005-)

Item	Part No.	Part Name	Qty	Options
1	6276-81-7400	AIR CLEANER	1	SN: 90005-UP
2	2A3-912-1110	BRACKET	1	SN: 90005-UP
3	01010-81235	BOLT	3	SN: 90005-UP
4	175-54-34170	WASHER	3	SN: 90005-UP
5	2A3-912-1140	HOSE	1	SN: 90005-UP
6	2A3-912-1130	BRACKET	1	SN: 90005-UP
7	01010-81030	BOLT	2	SN: 90005-UP
8	01643-31032	WASHER	2	SN: 90005-UP
9	2A3-912-1120	SEAL	1	SN: 90005-UP
10	11Y-01-31831	PRE-CLEANER	1	SN: 90005-UP

Reference: B0200-003001

Open this exact parts catalogue on K-Part

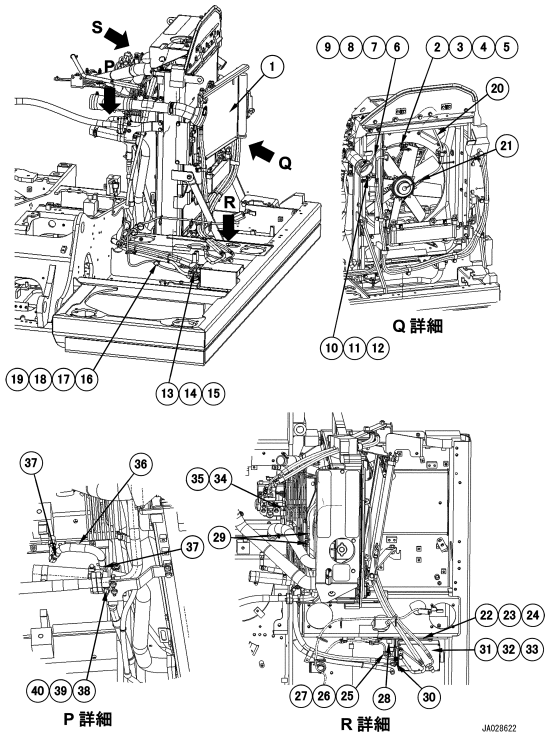

Reference: C0100-006001

C001001 COOLING SYSTEM - AIR CONDITIONER, (1/2)(#90005-)

Item	Part No.	Part Name	Qty	Options
1	2A3-912-1702	COOLING ASSEMBLY, RECTANGULAR	1	SN: 90005-UP
2	20Y-979-6191	SENSOR, TEMPERATURE	1	SN: 90005-UP
3	20Y-979-6271	BRACKET	1	SN: 90005-UP
4	01010-80616	BOLT	1	SN: 90005-UP
5	01643-30623	WASHER	1	SN: 90005-UP
6	2A3-912-4270	WIRING HARNESS	1	SN: 90005-UP
7	04434-50812	CLIP	2	SN: 90005-UP
8	01010-81220	BOLT	2	SN: 90005-UP
9	01643-31232	WASHER	2	SN: 90005-UP
10	2A3-912-4310	BRACKET	1	SN: 90005-UP
11	01010-80616	BOLT	1	SN: 90005-UP
12	01643-30623	WASHER	1	SN: 90005-UP
13	04434-51012	CLIP	1	SN: 90005-UP
14	01010-81225	BOLT	1	SN: 90005-UP
15	01643-31232	WASHER	1	SN: 90005-UP
16	07095-20211	CUSHION	1	SN: 90005-UP
17	04434-51712	CLIP	1	SN: 90005-UP
18	01010-81225	BOLT	1	SN: 90005-UP
19	01643-31232	WASHER	1	SN: 90005-UP
20	2A3-912-1791	HOSE	1	SN: 90005-UP
21	07281-00137	CLAMP	1	SN: 90005-UP
22	2A3-912-1880	BRACKET	1	SN: 90005-UP
23	01010-81220	BOLT	4	SN: 90005-UP
24	01643-31232	WASHER	4	SN: 90005-UP
25	04434-51012	CLIP	1	SN: 90005-UP
26	01010-81225	BOLT	1	SN: 90005-UP
27	01643-31232	WASHER	1	SN: 90005-UP
28	569-06-61960	RELAY	1	SN: 90005-UP
29	07281-00137	CLAMP	2	SN: 90005-UP
30	07281-00137	CLAMP	1	SN: 90005-UP
31	22B-Z59-1393	CONTROLLER, FAN	1	SN: 91301-UP
	22B-Z59-1390	CONTROLLER, FAN	1	SN: 90005-91300
32	01010-80612	BOLT	4	SN: 90005-UP
33	01643-30623	WASHER	4	SN: 90005-UP

Open this exact parts catalogue on K-Part

Item	Part No.	Part Name	Qty	Options
34	08191-00770	PLUG, CONNECTOR	6	SN: 90005-UP
35	08192-26100	CONNECTOR	1	SN: 90005-UP
36	2A3-912-1850	HOSE	1	SN: 90005-UP
37	11Y-09-11160	CLIP	2	SN: 90005-UP
38	2A3-912-1861	JOINT	1	SN: 90005-UP
39	01010-81025	BOLT	2	SN: 90005-UP
40	01643-31032	WASHER	2	SN: 90005-UP

Reference: C0100-006001

Open this exact parts catalogue on K-Part

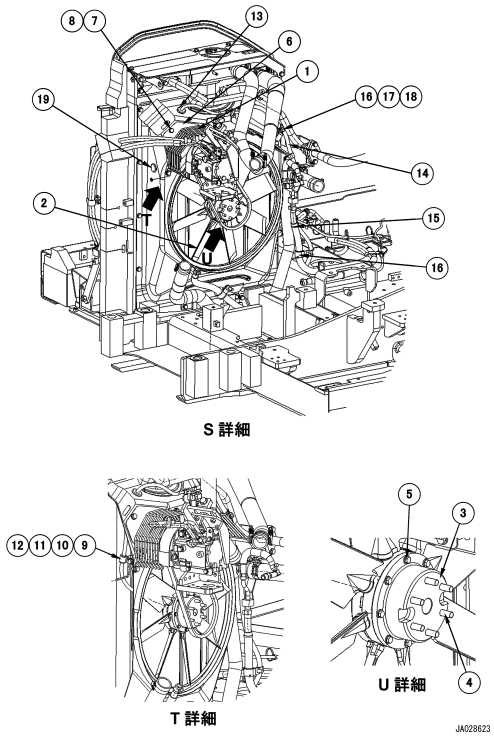

Reference: C0100-006002

C001002 COOLING SYSTEM - AIR CONDITIONER, (2/2)(#90005-)

Item	Part No.	Part Name	Qty	Options
1	2A3-912-1762	GUARD	1	SN: 90005-UP
2	2A3-912-1771	FAN, RECTANGULAR COOLING	1	SN: 90005-UP
3	2A3-912-1780	FLANGE	1	SN: 90005-UP
4	01252-71055	BOLT, WITH HEX SOCKET HOLE	6	SN: 90005-UP
5	22B-Z59-1430	BOLT	8	SN: 90005-UP
6	2A3-912-1840	PLATE	1	SN: 90005-UP
7	01010-81020	BOLT	3	SN: 90005-UP
8	01643-31032	WASHER	3	SN: 90005-UP
9	07095-40213	CUSHION	1	SN: 90005-UP
10	04434-51912	CLIP	1	SN: 90005-UP
11	01010-81030	BOLT	1	SN: 90005-UP
12	01643-31032	WASHER	1	SN: 90005-UP
13	125-06-22250	CAP	1	SN: 90005-UP
14	2A3-912-1821	HOSE	1	SN: 90005-UP
15	08034-40521	BAND	1	SN: 90005-UP
16	04434-51712	CLIP	3	SN: 90005-UP
17	01010-81020	BOLT	2	SN: 90005-UP
18	01643-31032	WASHER	2	SN: 90005-UP
19	09415-02512	CAP	1	SN: 90005-UP
	22B-Z59-8450	SERVICE KIT, REVERSIBLE FAN, SEAL KIT FOR MAIN UNIT	1	SN: 90005-UP
	22B-Z59-8870	SERVICE KIT, REVERSIBLE FAN, AIR FILTER FOR CONTROLLER(VER3)	1	SN: 91301-UP
	22B-Z59-8460	SERVICE KIT, REVERSIBLE FAN, AIR FILTER FOR CONTROLLER (VER2)	1	SN: 90005-91300

Reference: C0100-006002

Open this exact parts catalogue on K-Part

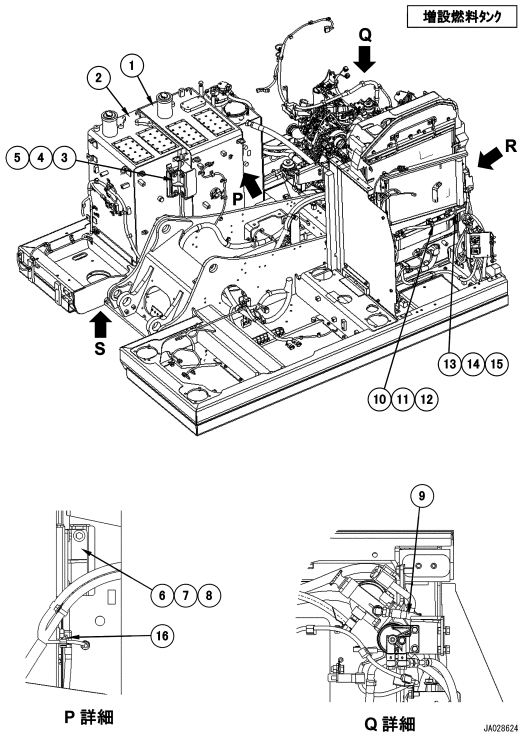

Reference: D0100-005001

D001001 FUEL TANK - FUEL SUPPLY PIPING, (1/10) (WITH ADDITIONAL FUEL TANK)(#90005-)

Item	Part No.	Part Name	Qty	Options
1	2A3-912-1300	TANK ASSEMBLY	1	SN: 90005-UP
2	2A3-912-1400	TANK ASSEMBLY	1	SN: 90005-UP
3	2A3-04-11131	BRACKET	1	SN: 90005-UP
4	01010-81235	BOLT	4	SN: 90005-UP
5	175-54-34170	WASHER	4	SN: 90005-UP
6	2A3-04-11131	BRACKET	1	SN: 90005-UP
7	01010-81235	BOLT	4	SN: 90005-UP
8	175-54-34170	WASHER	4	SN: 90005-UP
9	2A3-04-11210	HOSE	1	SN: 90005-UP
10	04434-51912	CLIP	1	SN: 90005-UP
11	01010-81225	BOLT	1	SN: 90005-UP
12	01643-31232	WASHER	1	SN: 90005-UP
13	04434-51912	CLIP	1	SN: 90005-UP
14	01010-81225	BOLT	1	SN: 90005-UP
15	01643-31232	WASHER	1	SN: 90005-UP
16	02896-11009	O-RING	1	SN: 90005-UP

Reference: D0100-005001

Open this exact parts catalogue on K-Part

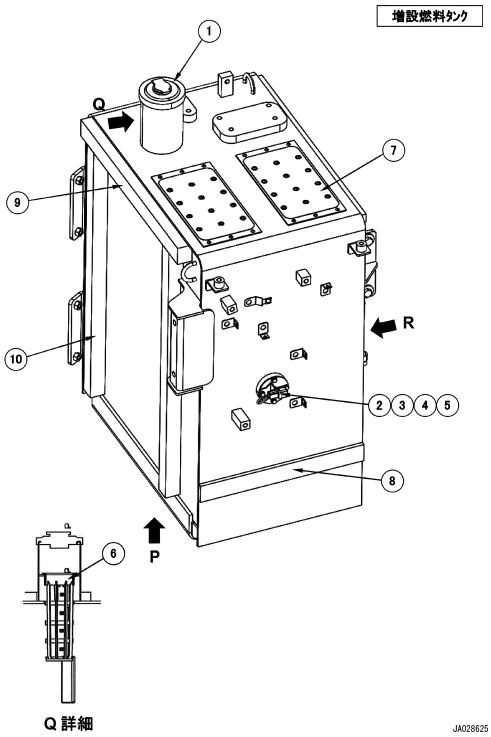

Reference: D0100-005002

D001002 FUEL TANK - FUEL SUPPLY PIPING, (2/10) (WITH AUXILIARY FUEL TANK)(#90005-)

Item	Part No.	Part Name	Qty	Options
	2A3-912-1300	TANK ASSEMBLY	1	SN: 90005-UP
1	20Y-04-11162	• CAP	1	SN: 90005-UP
2	2A5-06-11391	• SENSOR, FUEL LEVEL	1	SN: 90005-UP
3	07000-13050	• O-RING	1	SN: 90005-UP
4	01010-80612	• BOLT	4	SN: 90005-UP
5	01643-30623	• WASHER	4	SN: 90005-UP
6	22U-04-21241	• STRAINER ASSEMBLY	1	SN: 90005-UP
7	203-00-11920	• PLATE	2	SN: 90005-UP
8	2A3-912-3660	• SHEET	1	SN: 90005-UP
9	2A3-912-3610	• SHEET	1	SN: 90005-UP
10	2A3-912-3580	• SHEET	2	SN: 90005-UP

Reference: D0100-005002

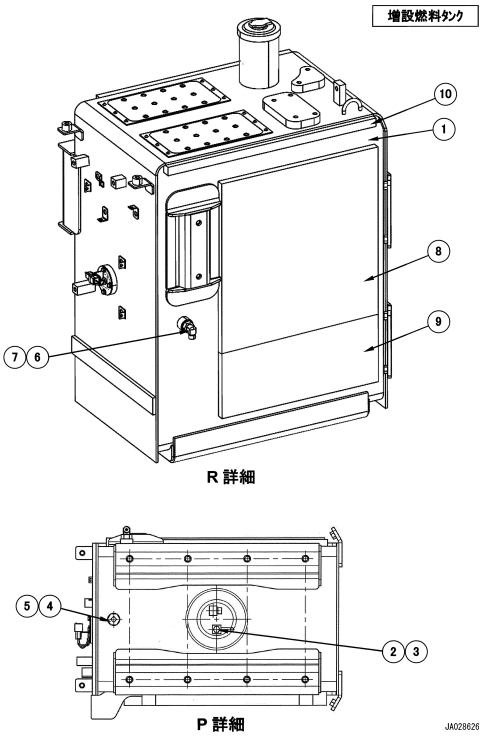

Reference: D0100-005003

D001003 FUEL TANK - FUEL SUPPLY PIPING, (3/10) (WITH ADDITIONAL FUEL TANK)(#90005-)

Item	Part No.	Part Name	Qty	Options
	2A3-912-1300	TANK ASSEMBLY	1	SN: 90005-UP
1	2A3-912-1151	• TANK	1	SN: 90005-UP
2	07040-11007	• PLUG	1	SN: 90005-UP
3	07002-11023	• O-RING	1	SN: 90005-UP
4	07040-12412	• PLUG	1	SN: 90005-UP
5	07002-12434	• O-RING	1	SN: 90005-UP
6	02782-10315	• ERBO	1	SN: 90005-UP
7	07002-12034	• O-RING	1	SN: 90005-UP
8	2A3-04-11182	• SHEET	1	SN: 90005-UP
9	2A3-04-11280	• SHEET	1	SN: 90005-UP
10	2A3-912-3771	• SHEET	1	SN: 90100-UP
	2A3-912-3770	• SHEET	1	SN: 90005-90099

Reference: D0100-005003

Open this exact parts catalogue on K-Part

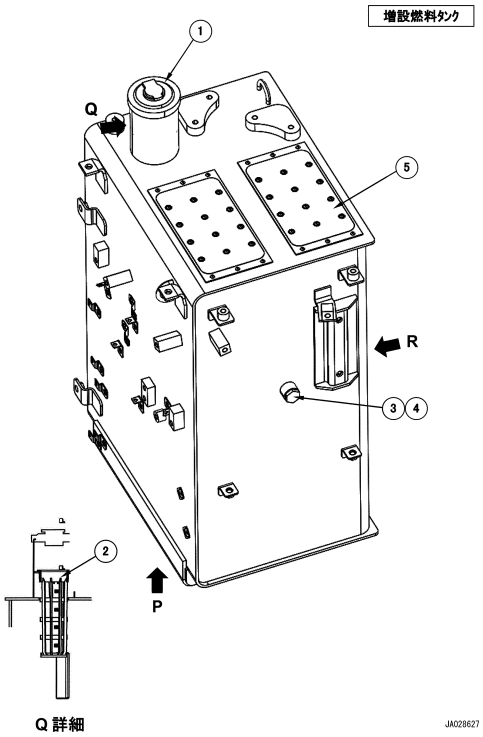

Reference: D0100-005004

D001004 FUEL TANK - FUEL SUPPLY PIPING, (4/10) (WITH ADDITIONAL FUEL TANK)(#90005-)

Item	Part No.	Part Name	Qty	Options
	2A3-912-1400	TANK ASSEMBLY	1	SN: 90005-UP
1	20Y-04-11162	• CAP	1	SN: 90005-UP
2	22U-04-21241	• STRAINER ASSEMBLY	1	SN: 90005-UP
3	07040-12012	• PLUG	1	SN: 90005-UP
4	07002-12034	• O-RING	1	SN: 90005-UP
5	203-00-11920	• PLATE	2	SN: 90005-UP

Reference: D0100-005004

Open this exact parts catalogue on K-Part

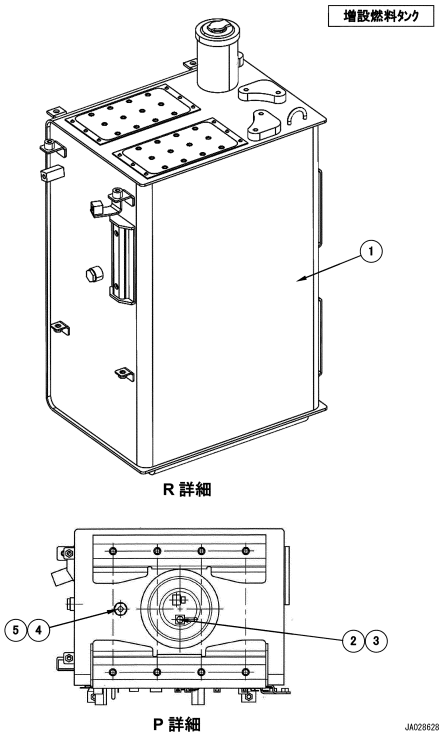

Reference: D0100-005005

D001005 FUEL TANK - FUEL SUPPLY PIPING, (5/10) (WITH ADDITIONAL FUEL TANK)(#90005-)

Item	Part No.	Part Name	Qty	Options
	2A3-912-1400	TANK ASSEMBLY	1	SN: 90005-UP
1	2A3-912-1161	• TANK	1	SN: 90005-UP
2	07040-11007	• PLUG	1	SN: 90005-UP
3	07002-11023	• O-RING	1	SN: 90005-UP
4	07040-12412	• PLUG	1	SN: 90005-UP
5	07002-12434	• O-RING	1	SN: 90005-UP

Reference: D0100-005005

Open this exact parts catalogue on K-Part

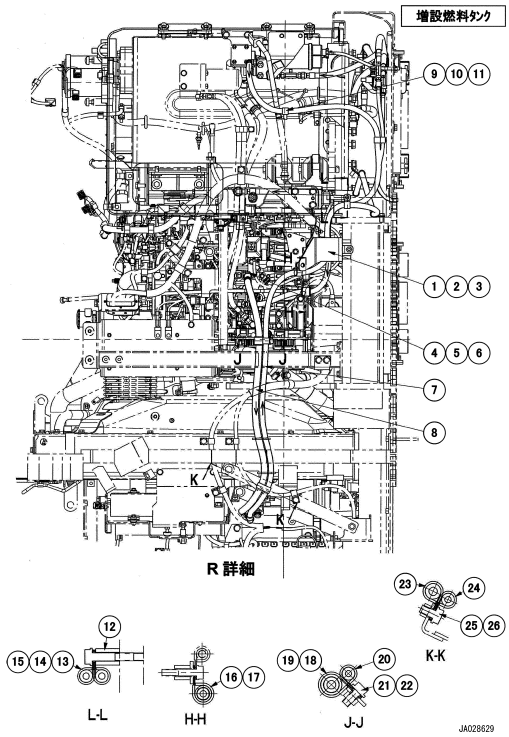

Reference: D0100-005006

D001006 FUEL TANK - FUEL SUPPLY PIPING, (6/10) (WITH AUXILIARY FUEL TANK)(#90005-)

Item	Part No.	Part Name	Qty	Options
1	2A3-04-11240	BRACKET	1	SN: 90005-UP
2	01010-81240	BOLT	2	SN: 90005-UP
3	01643-31232	WASHER	2	SN: 90005-UP
4	21W-62-42420	NIPPLE	1	SN: 90005-UP
5	02896-61009	O-RING	1	SN: 90005-UP
6	07002-61823	O-RING	1	SN: 90005-UP
7	2A3-04-11251	HOSE	1	SN: 90005-UP
8	2A3-04-11221	HOSE	1	SN: 90005-UP
9	04434-51912	CLIP	1	SN: 90005-UP
10	01010-81225	BOLT	1	SN: 90005-UP
11	01643-31232	WASHER	1	SN: 90005-UP
12	20Y-03-11220	COLOR	1	SN: 90005-UP
13	04434-51912	CLIP	2	SN: 90005-UP
14	01010-81265	BOLT	1	SN: 90005-UP
15	01643-31232	WASHER	1	SN: 90005-UP
16	04434-52511	CLIP	1	SN: 90005-UP
17	07095-20318	CUSHION	1	SN: 90005-UP
18	04434-53212	CLIP	1	SN: 90005-UP
19	07095-40523	CUSHION	1	SN: 90005-UP
20	04434-51912	CLIP	1	SN: 90005-UP
21	01010-81230	BOLT	1	SN: 90005-UP
22	01643-31232	WASHER	1	SN: 90005-UP
23	04434-52312	CLIP	1	SN: 90005-UP
24	04434-51912	CLIP	1	SN: 90005-UP
25	01010-81225	BOLT	1	SN: 90005-UP
26	01643-31232	WASHER	1	SN: 90005-UP

Reference: D0100-005006

Open this exact parts catalogue on K-Part

Get the complete PDF catalogue

Komatsu PC120-11 (JPN) SHIPBOARD SPEC S/N 90005-UP (JAPANESE)

$89

with PayPal | Store cart: $99

Buy this PDF on Manuals Komatsu

Check the model, serial range and language before payment.

Download instructions are emailed after payment confirmation.

This free sample contains 10 catalogue pages.