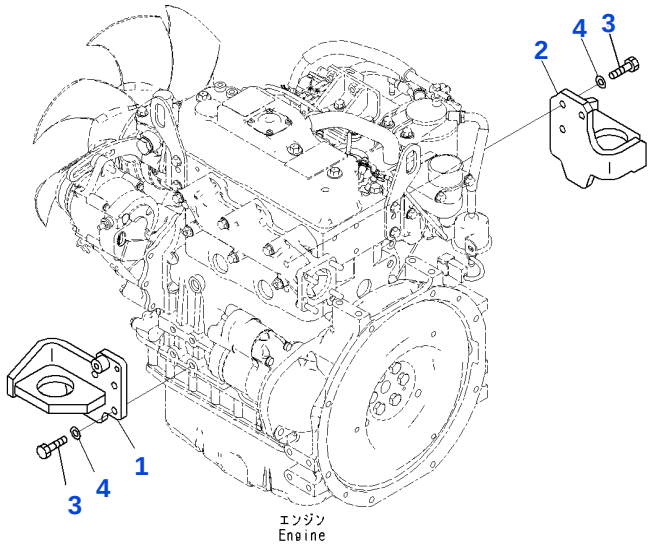

Reference: B0000-001001

B001001 ENGINE RELATED PARTS, MOUNTING PARTS(#60001-)

Item	Part No.	Part Name	Qty	Options
1	22F-01-31161	BRACKET	1	SN: 60001-UP
2	22F-01-31170	BRACKET	1	SN: 60001-UP
3	01010-81025	BOLT	6	SN: 60001-UP
4	01643-31032	WASHER	6	SN: 60001-UP

Reference: B0000-001001

Open this exact parts catalogue on K-Part

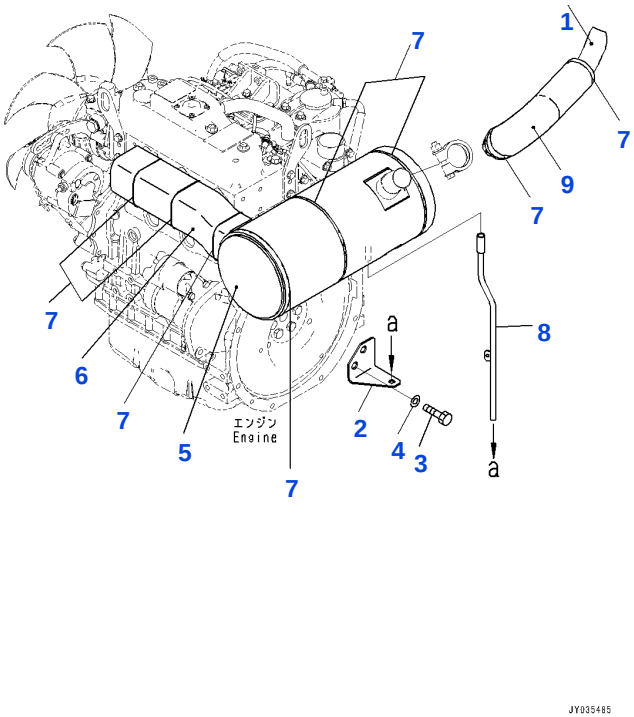

Reference: B0000-001002

B001002 ENGINE RELATED PARTS, EXHAUST MUFFLER RELATED PARTS (WITH EXHAUST PIPE, UPWARD) (

Item	Part No.	Part Name	Qty	Options
1	22F-01-51710	PIPE	1	SN: 60001-UP
2	22L-01-21532	BRACKET	1	SN: 60001-UP
3	01010-81020	BOLT	2	SN: 60001-UP
4	01643-31032	WASHER	2	SN: 60001-UP
5	22L-01-21560	SEAT	1	SN: 60001-UP
6	21U-01-31420	SEAT	1	SN: 60001-UP
7	22L-01-21440	WIRE	8	SN: 60001-UP
8	22L-01-21522	PIPE	1	SN: 60001-UP
9	22N-01-51760	CROSS	1	SN: 60001-UP

Reference: B0000-001002

Open this exact parts catalogue on K-Part

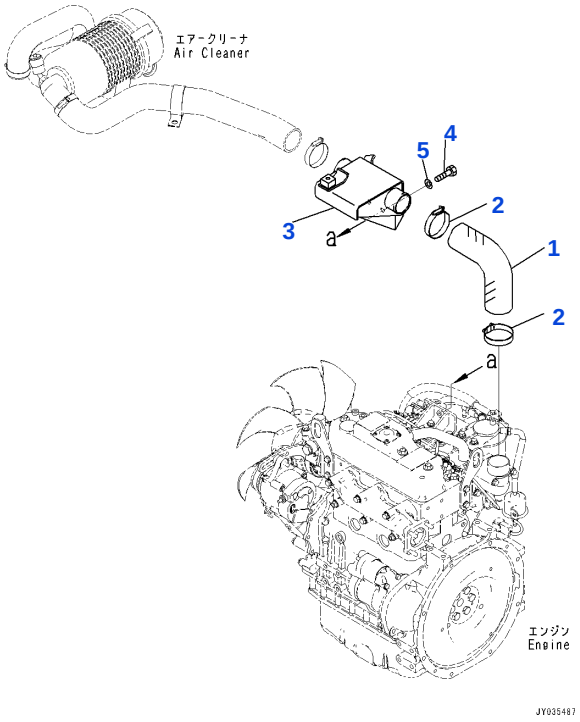

Reference: B0000-001003

B001003 ENGINE RELATED PARTS, AIR CLEANER RELATED PARTS (WITH CAB)(#60001-)

Item	Part No.	Part Name	Qty	Options
1	21U-01-61110	HOSE	1	SN: 60001-UP
2	07281-00709	CLAMP	2	SN: 60001-UP
3	21U-979-6430	CHAMBER	1	SN: 60001-UP
4	01010-80830	BOLT	2	SN: 60001-UP
5	01643-30823	WASHER	2	SN: 60001-UP

Reference: B0000-001003

Open this exact parts catalogue on K-Part

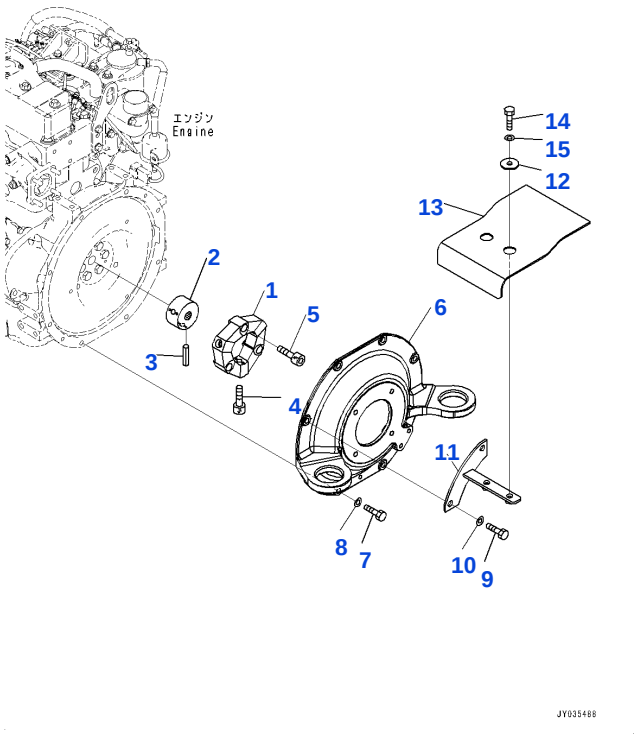

Reference: B0000-001004

B001004 ENGINE RELATED PARTS, DAMPER(#60001-)

Item	Part No.	Part Name	Qty	Options
	22F-01-21300	COUPLING	1	SN: 60001-UP
1	22L-01-21710	• RUBBER	1	SN: 60001-UP
2	20T-01-81110	• BOSS	1	SN: 60001-UP
3	04025-00512	• PIN, SPRING	6	SN: 60001-UP
4	01252-31240	• BOLT, HEXAGON SOCKET HEAD	3	SN: 60001-UP
5	01252-31240	BOLT, HEXAGON SOCKET HEAD	3	SN: 60001-UP
6	22L-01-21312	COVER	1	SN: 60001-UP
7	01010-81025	BOLT	6	SN: 60001-UP
8	01643-31032	WASHER	6	SN: 60001-UP
9	01010-81030	BOLT	2	SN: 60001-UP
10	01643-31032	WASHER	2	SN: 60001-UP
11	22F-01-31811	BRACKET	1	SN: 60001-UP
12	203-54-56960	COLLAR	2	SN: 60001-UP
13	22F-01-31821	SEAT	1	SN: 60001-UP
14	01010-81025	BOLT	2	SN: 60001-UP
15	01643-31032	WASHER	2	SN: 60001-UP

Reference: B0000-001004

Open this exact parts catalogue on K-Part

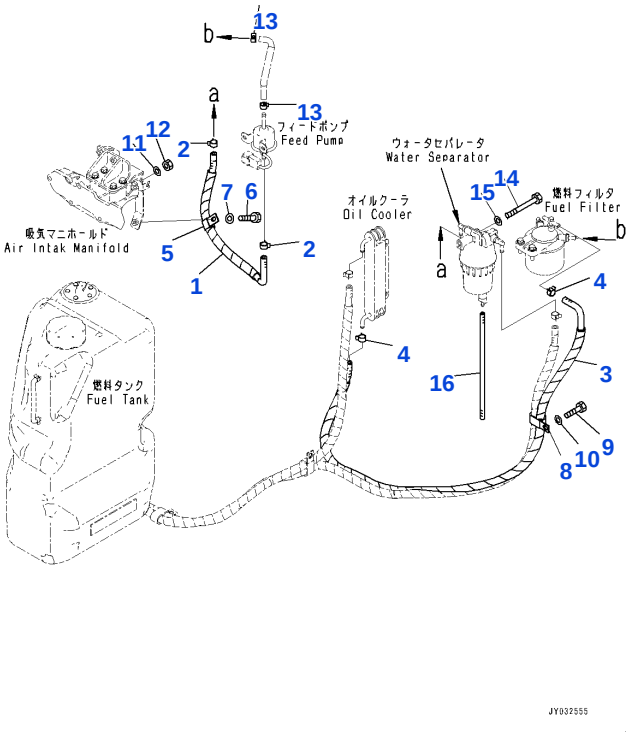

Reference: B0000-001005

B001005 ENGINE RELATED PARTS, FUEL PIPING(#60001-)

Item	Part No.	Part Name	Qty	Options
1	22F-04-51210	HOSE ASSEMBLY	1	SN: 60001-UP
2	11Y-09-11130	CLAMP	2	SN: 60001-UP
3	22F-04-51240	HOSE ASSEMBLY	1	SN: 60001-UP
4	11Y-09-11130	CLAMP	2	SN: 60001-UP
5	04434-51908	CLIP	1	SN: 60001-UP
6	01010-80816	BOLT	1	SN: 60001-UP
7	01643-30823	WASHER	1	SN: 60001-UP
8	04435-51910	CLIP	1	SN: 60001-UP
9	01010-81020	BOLT	1	SN: 60001-UP
10	01643-31032	WASHER	1	SN: 60001-UP
11	01643-30823	WASHER	1	SN: 60001-UP
12	01580-10806	NUT	1	SN: 60001-UP
13	11Y-09-11130	CLAMP	2	SN: 60001-UP
14	01010-80895	BOLT	1	SN: 60001-UP
15	01643-30823	WASHER	1	SN: 60001-UP
16	22L-04-21220	HOSE	1	SN: 60001-UP

Reference: B0000-001005

Open this exact parts catalogue on K-Part

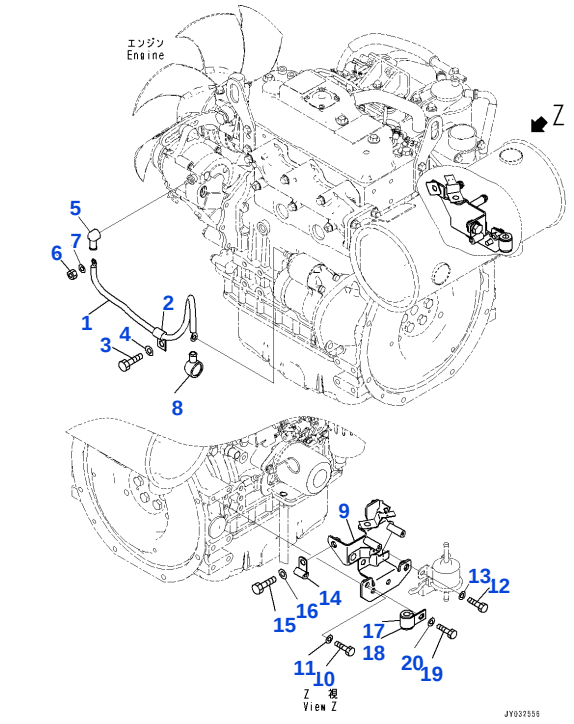

Reference: B0000-001006

B001006 ENGINE RELATED PARTS, FEED PUMP INSTALLATION BRACKET/STARTER CABLE (#60001-)

Item	Part No.	Part Name	Qty	Options
1	22L-06-21280	CABLE	1	SN: 60001-UP
2	04434-51010	CLIP	1	SN: 60001-UP
3	01010-81020	BOLT	1	SN: 60001-UP
4	01643-31032	WASHER	1	SN: 60001-UP
5	08038-10519	CAP, TERMINAL	1	SN: 60001-UP
6	01580-10605	NUT	1	SN: 60001-UP
7	01640-20610	WASHER	1	SN: 60001-UP
8	08038-00525	CAP, TERMINAL	1	SN: 60001-UP
9	22F-01-51621	BRACKET	1	SN: 60001-UP
10	01010-80816	BOLT	2	SN: 60001-UP
11	01643-30823	WASHER	2	SN: 60001-UP
12	01010-80616	BOLT	2	SN: 60001-UP
13	01643-30623	WASHER	2	SN: 60001-UP
14	600-051-2060	CLIP	1	SN: 60001-UP
15	01010-81020	BOLT	1	SN: 60001-UP
16	01643-31032	WASHER	1	SN: 60001-UP
17	04434-51708	CLIP	1	SN: 60001-UP
18	07095-40211	CUSHION	1	SN: 60001-UP
19	01010-80816	BOLT	1	SN: 60001-UP
20	01643-30823	WASHER	1	SN: 60001-UP

Reference: B0000-001006

Open this exact parts catalogue on K-Part

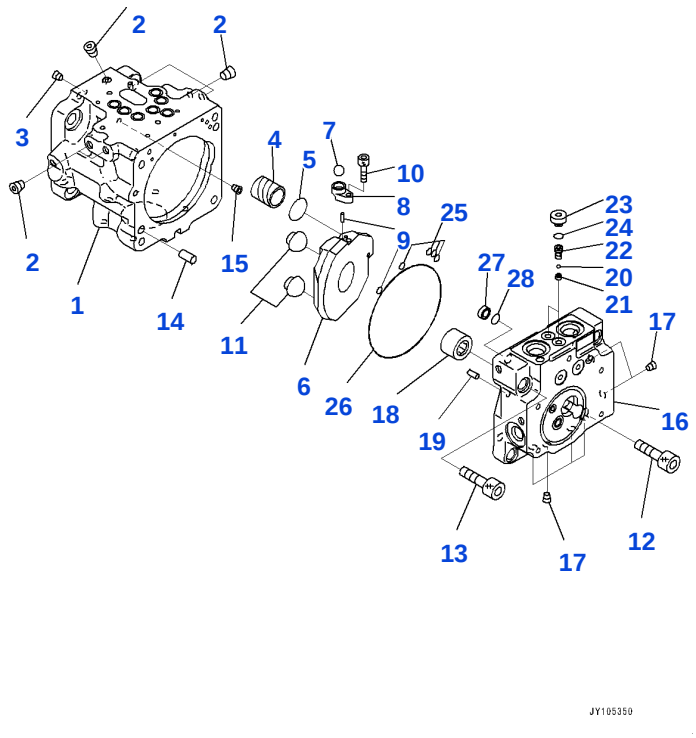

Reference: B0000-001007

B001007 ENGINE RELATED PARTS, PISTON PUMP (1/6)(#60001-)

Item	Part No.	Part Name	Qty	Options
	708-3S-00770	PUMP ASSEMBLY	1	SN: 60001-UP
		• PUMP SUBASSEMBLY	1	SN: 60001-UP
	708-3S-04760	• • CASE ASSEMBLY	1	SN: 60001-UP
1		• • • CASE, PUMP	1	SN: 60001-UP
2		• • • PLUG, STOCKING	12	SN: 60001-UP
3		• • • PLUG, STOCKING	1	SN: 60001-UP
4		• • • SLEEVE	1	SN: 60001-UP
5		• • • RING	1	SN: 60001-UP
6	708-3S-13550	• • CAM, ROCKER	1	SN: 60001-UP
7		• • BALL	1	SN: 60001-UP
8	708-3S-14141	• • SPACER	1	SN: 60001-UP
9		• • PIN	2	SN: 60001-UP
10		• • BOLT, HEXAGON SOCKET HEAD	1	SN: 60001-UP
11	708-1T-33432	• • BALL, RETAINER	2	SN: 60001-UP
12	01252-61235	• • BOLT, HEXAGON SOCKET HEAD	2	SN: 60001-UP
13	01252-61255	• • BOLT, HEXAGON SOCKET HEAD	2	SN: 60001-UP
14	04020-01024	• • PIN, DOWEL	2	SN: 60001-UP
15	708-3T-11310	• • ORIFICE	1	SN: 60001-UP
	708-3S-04741	• • CAP SUBASSEMBLY	1	SN: 61860-UP
	708-3S-04740	• • CAP SUBASSEMBLY	1	SN: 60001-61859
16		• • • CAP, END	1	SN: 61860-UP
		• • • CAP, END	1	SN: 60001-61859
17		• • • PLUG, STOCKING	12	SN: 60001-UP
18	708-21-12760	• • BEARING	1	SN: 60001-UP
19	720-68-19610	• • PIN	1	SN: 60001-UP
	708-3S-04750	• • VALVE SUBASSEMBLY	2	SN: 60001-UP
20		• • • BALL	1	SN: 60001-UP
21		• • • SEAT	1	SN: 60001-UP
22		• • • PLUG	1	SN: 60001-UP
23	708-3S-11590	• • • PLUG	1	SN: 60001-UP
24	07000-B1010	• • • O-RING	1	SN: 60001-UP
25	07000-B1006	• • O-RING	5	SN: 60001-UP
26	07000-B2130	• • O-RING	1	SN: 60001-UP
27	708-2L-25480	• • FILTER	1	SN: 60001-UP

Open this exact parts catalogue on K-Part

Item	Part No.	Part Name	Qty	Options
28	708-2L-25490	• • O-RING	1	SN: 60001-UP
		[C1]-PARTS WITH THIS SYMBOL CANNOT BE SUPPLIED INDIVIDUALLY. THEY ARE SUPPLIED AS ASSEMBLIES.		SN: UP
		[C2]-PARTS WITH THIS SYMBOL ARE FOR SPECIFIC KOMATSU DEALERS. THEY CANNOT BE SUPPLIED AS INDIVIDUAL PARTS. THEY ARE SUPPLIED ONLY AS ASSEMBLY PARTS.		SN: UP

Reference: B0000-001007

Open this exact parts catalogue on K-Part

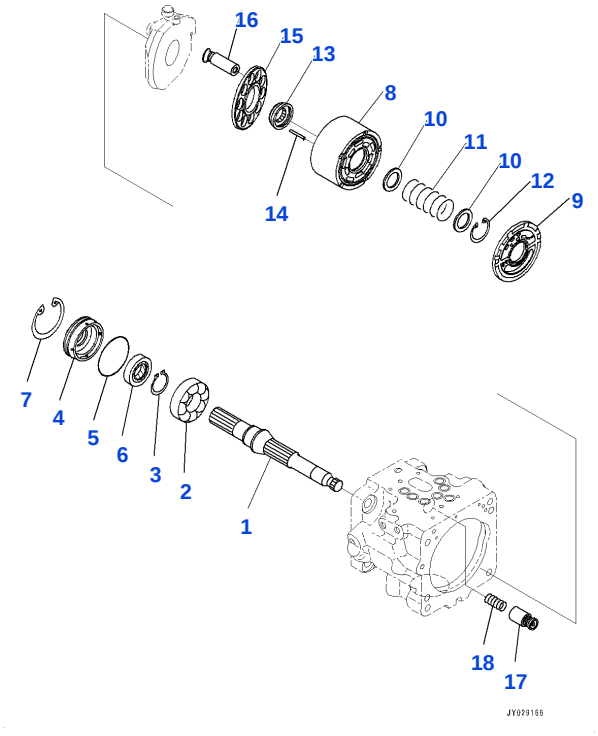

Reference: B0000-001008

B001008 ENGINE RELATED PARTS, PISTON PUMP (2/6)(#60001-)

Item	Part No.	Part Name	Qty	Options
	708-3S-00770	PUMP ASSEMBLY	1	SN: 60001-UP
		• PUMP SUBASSEMBLY	1	SN: 60001-UP
1	708-3S-12121	• • SHAFT	1	SN: 60001-UP
2	708-3S-12210	• • BEARING	1	SN: 60001-UP
3	708-21-12840	• • RING, SNAP	1	SN: 60001-UP
4	708-3S-12140	• • HOLDER	1	SN: 60001-UP
5	708-1S-12350	• • O-RING	1	SN: 60001-UP
6	708-7T-12330	• • SEAL, OIL	1	SN: 60001-UP
7	04065-06220	• • RING, SNAP	1	SN: 60001-UP
8	708-3S-13140	• • BLOCK, CYLINDER	1	SN: 60001-UP
9	708-3S-13560	• • PLATE, VALVE	1	SN: 60001-UP
10	708-1T-13710	• • SPACER	2	SN: 60001-UP
11	708-3S-13430	• • SPRING	1	SN: 60001-UP
12	04065-03515	• • RING, SNAP	1	SN: 60001-UP
13	708-1T-13690	• • GUIDE	1	SN: 60001-UP
14	708-1S-13380	• • PIN	3	SN: 60001-UP
15	708-1T-13670	• • RETAINER, SHOE	1	SN: 60001-UP
16	708-3S-13520	• • PISTON SUBASSEMBLY	10	SN: 60001-UP
17	708-3S-14290	• • PISTON SUBASSEMBLY	1	SN: 60001-UP
18	708-1S-14241	• • SPRING	1	SN: 60001-UP
		[C1]-PARTS WITH THIS SYMBOL CANNOT BE SUPPLIED INDIVIDUALLY. THEY ARE SUPPLIED AS ASSEMBLIES.		SN: UP
		[C2]-PARTS WITH THIS SYMBOL ARE FOR SPECIFIC KOMATSU DEALERS. THEY CANNOT BE SUPPLIED AS INDIVIDUAL PARTS. THEY ARE SUPPLIED ONLY AS ASSEMBLY PARTS.		SN: UP

Reference: B0000-001008

Open this exact parts catalogue on K-Part

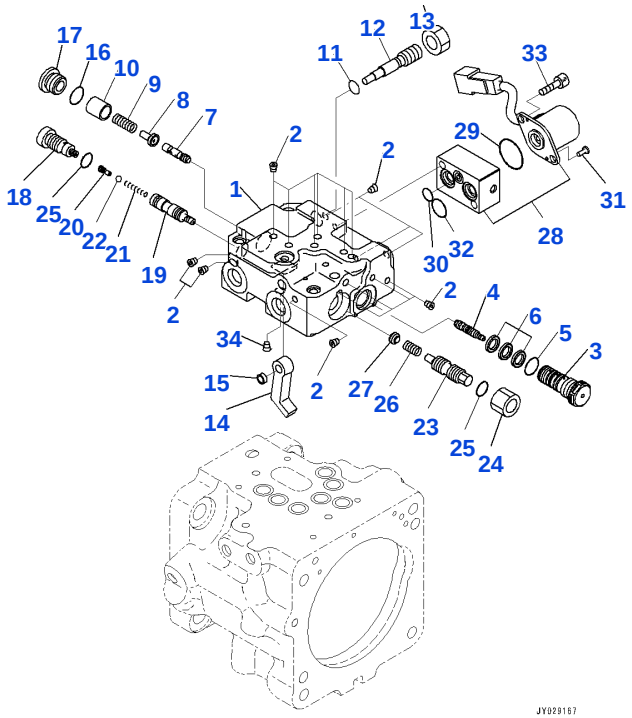

Reference: B0000-001009

B001009 ENGINE RELATED PARTS, PISTON PUMP (3/6) (#60001-)

Item	Part No.	Part Name	Qty	Options
	708-3S-00770	PUMP ASSEMBLY	1	SN: 60001-UP
	708-3S-03750	• VALVE ASSEMBLY	1	SN: 60001-UP
		• • BODY ASSEMBLY	1	SN: 60001-UP
1		• • • VALVE BODY	1	SN: 60001-UP
2		• • • PLUG, STOCKING	16	SN: 60001-UP
		• • PISTON SUBASSEMBLY	1	SN: 60001-UP
3		• • • SLEEVE	1	SN: 60001-UP
4		• • • PISTON	1	SN: 60001-UP
5	07002-61623	• • • O-RING	1	SN: 60001-UP
6	708-1W-45290	• • • SEAL	3	SN: 60001-UP
7		• • SPOOL	1	SN: 60001-UP
8		• • SEAT	1	SN: 60001-UP
9		• • SPRING	1	SN: 60001-UP
10		• • RETAINER	1	SN: 60001-UP
11		• • O-RING	1	SN: 60001-UP
12		• • PLUG	1	SN: 60001-UP
13		• • NUT	1	SN: 60001-UP
14		• • LEVER	1	SN: 60001-UP
15		• • SPACER	1	SN: 60001-UP
16		• • O-RING	1	SN: 60001-UP
17		• • PLUG	1	SN: 60001-UP
18	708-3S-15860	• • PLUG	1	SN: 60001-UP
		• • SPOOL SUBASSEMBLY	1	SN: 60001-UP
19		• • • SPOOL	1	SN: 60001-UP
20		• • • PLUG	1	SN: 60001-UP
21		• • • SPRING	1	SN: 60001-UP
22		• • • BALL	1	SN: 60001-UP
23		• • PLUG	1	SN: 60001-UP
24		• • NUT	1	SN: 60001-UP
25		• • O-RING	2	SN: 60001-UP
26		• • SPRING	1	SN: 60001-UP
27		• • SEAT	1	SN: 60001-UP
28	702-21-62200	• • VALVE, PILOT	1	SN: 60001-UP
29		• • • O-RING	1	SN: 60001-UP

Open this exact parts catalogue on K-Part

Get the complete PDF catalogue

Komatsu PC38UU-6 (JPN) S/N 60001-62999 (Japanese)

$89

with PayPal | Store cart: $99

Buy this PDF on Manuals Komatsu

Check the model, serial range and language before payment.

Download instructions are emailed after payment confirmation.

This free sample contains 10 catalogue pages.