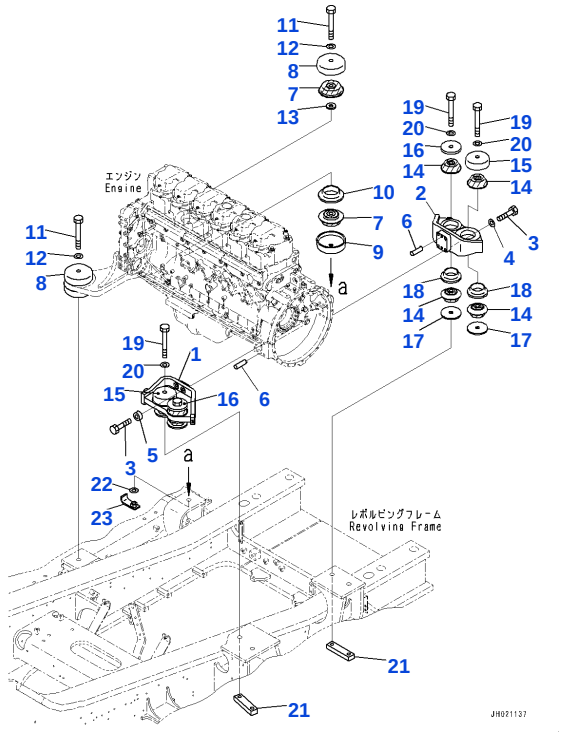

Reference: B0100-001001

B001001 ENGINE INSTALLATION, BRACKET-CUSHION(#80001-80180)

Item	Part No.	Part Name	Qty	Options
1	21M-01-51130	BRACKET	1	SN: 80001-@
2	21M-01-51120	BRACKET	1	SN: 80001-@
3	20Y-30-16230	BOLT	8	SN: 80001-@
4	01643-31645	WASHER	4	SN: 80001-@
5	42C-32-19150	SPACER	4	SN: 80001-@
6	04020-01434	PIN, DOWEL	4	SN: 80001-@
7	21N-01-11120	CUSHION	4	SN: 80001-@
8	21M-01-51140	STOPPER	2	SN: 80001-@
9	209-01-51133	STOPPER	2	SN: 80001-@
10	21T-01-11210	COLLAR	2	SN: 80001-80180
11	208-01-11181	BOLT	2	SN: 80001-@
12	01643-32460	WASHER	2	SN: 80001-@
13	21T-01-11220	COLLAR	2	SN: 80001-@
14	13Y-01-11560	CUSHION	8	SN: 80001-@
15	21M-01-11360	STOPPER	2	SN: 80001-@
16	208-01-11151	WASHER	2	SN: 80001-@
17	208-01-11161	WASHER	4	SN: 80001-@
18	208-01-11221	COLLAR	4	SN: 80001-80180
19	208-01-11181	BOLT	4	SN: 80001-@
20	01643-32460	WASHER	4	SN: 80001-@
21	21M-01-52140	PLATE	2	SN: 80001-@
22	01643-32460	WASHER	1	SN: 80001-@
23	21M-01-21261	PLATE	1	SN: 80001-@

Reference: B0100-001001

Open this exact parts catalogue on K-Part

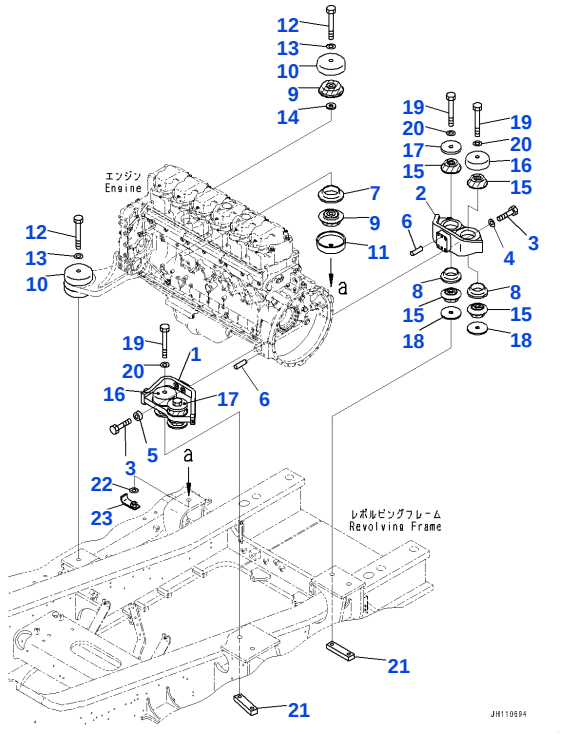

Reference: B0100-001001A

B001002 ENGINE INSTALLATION, BRACKET, CUSHION (#80181-)

Item	Part No.	Part Name	Qty	Options
1	21M-01-51130	BRACKET	1	SN: 80001-UP
2	21M-01-51120	BRACKET	1	SN: 80001-UP
3	20Y-30-16230	BOLT	8	SN: 80001-UP
4	01643-31645	WASHER	4	SN: 80001-UP
5	42C-32-19150	SPACER	4	SN: 80001-UP
6	04020-01434	PIN, DOWEL	4	SN: 80001-UP
7	21T-01-11210	COLLAR	2	SN: 80181-UP
8	208-01-11221	COLLAR	4	SN: 80181-UP
9	21N-01-11120	CUSHION	4	SN: 80001-UP
10	21M-01-51140	STOPPER	2	SN: 80001-UP
11	209-01-51133	STOPPER	2	SN: 80001-UP
12	208-01-11181	BOLT	2	SN: 80001-UP
13	01643-32460	WASHER	2	SN: 80001-UP
14	21T-01-11220	COLLAR	2	SN: 80001-UP
15	13Y-01-11560	CUSHION	8	SN: 80001-UP
16	21M-01-11360	STOPPER	2	SN: 80001-UP
17	208-01-11151	WASHER	2	SN: 80001-UP
18	208-01-11161	WASHER	4	SN: 80001-UP
19	208-01-11181	BOLT	4	SN: 80001-UP
20	01643-32460	WASHER	4	SN: 80001-UP
21	21M-01-52140	PLATE	2	SN: 80001-UP
22	01643-32460	WASHER	1	SN: 80001-UP
23	21M-01-21261	PLATE	1	SN: 80001-UP

Reference: B0100-001001A

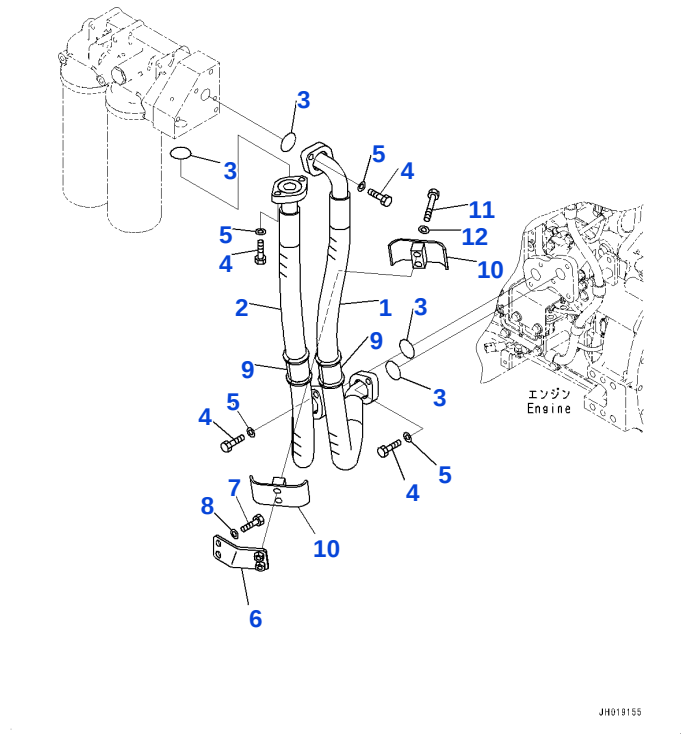

Reference: B0100-001002

B001003 ENGINE MOUNTING, OIL FILTER PIPING (1/2)(#80001-)

Item	Part No.	Part Name	Qty	Options
1	21M-01-51170	HOSE	1	SN: 80001-UP
2	21M-01-51180	HOSE	1	SN: 80001-UP
3	07000-73038	O-RING	4	SN: 80001-UP
4	01010-81240	BOLT	8	SN: 80001-UP
5	01643-31232	WASHER	8	SN: 80001-UP
6	21M-01-51980	BRACKET	1	SN: 80001-UP
7	01010-81230	BOLT	2	SN: 80001-UP
8	01643-31232	WASHER	2	SN: 80001-UP
9	07095-01038	CUSHION	2	SN: 80001-UP
10	07094-31024	CLAMP	2	SN: 80001-UP
11	01010-81290	BOLT	2	SN: 80001-UP
12	01643-31232	WASHER	2	SN: 80001-UP

Reference: B0100-001002

Open this exact parts catalogue on K-Part

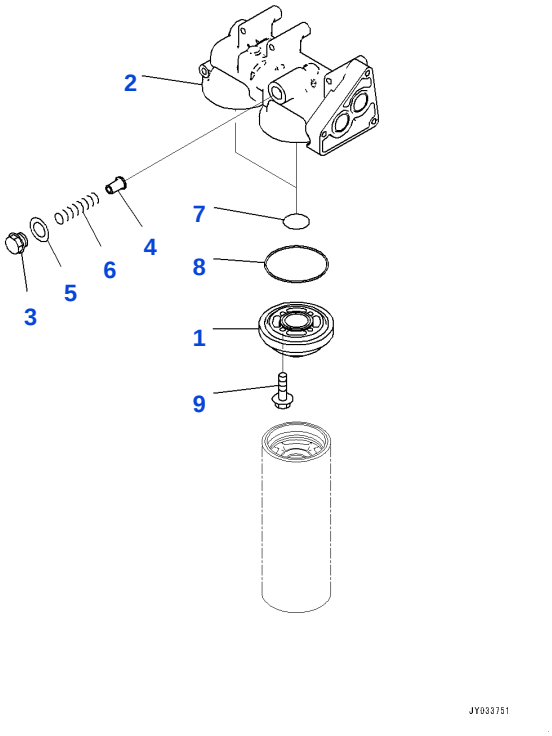

Reference: B0100-001003

B001004 ENGINE MOUNTING, OIL FILTER(#80001-)

Item	Part No.	Part Name	Qty	Options
	6261-51-5101	HEAD ASSEMBLY	1	SN: 80001-UP
1		• ADAPTER	2	SN: 80001-UP
2		• HEAD	1	SN: 80001-UP
3	6217-51-5660	• CAP	1	SN: 80001-UP
4	6162-55-5230	• VALVE	1	SN: 80001-UP
5	6162-53-5430	• PACKING	1	SN: 80001-UP
6	600-211-1890	• SPRING	1	SN: 80001-UP
7	07000-72040	• O-RING	2	SN: 80001-UP
8	07000-72105	• O-RING	2	SN: 80001-UP
9	01435-00845	• BOLT, FLANGE TYPE	8	SN: 80001-UP
		[C1]-PARTS WITH THIS SYMBOL CANNOT BE SUPPLIED INDIVIDUALLY. THEY ARE SUPPLIED AS ASSEMBLIES.		SN: UP

Reference: B0100-001003

Open this exact parts catalogue on K-Part

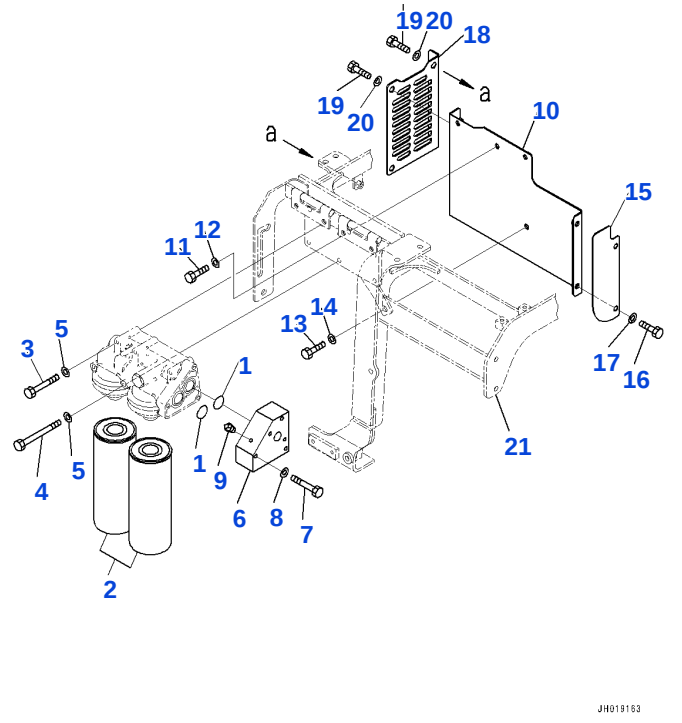

Reference: B0100-001004

B001005 ENGINE MOUNTING, OIL FILTER PIPING (2/2) (#80001-)

Item	Part No.	Part Name	Qty	Options
1	07000-73040	O-RING	2	SN: 80001-UP
2	600-211-1341	CARTRIDGE, OIL FILTER	2	SN: 80052-UP
	600-211-1340	CARTRIDGE, OIL FILTER	2	SN: 80001-80051
3	01011-81010	BOLT	3	SN: 80001-UP
4	01011-81050	BOLT	3	SN: 80001-UP
5	01643-31032	WASHER	6	SN: 80001-UP
6	21M-01-51160	BLOCK	1	SN: 80001-UP
7	01010-81090	BOLT	3	SN: 80001-UP
8	01643-31032	WASHER	3	SN: 80001-UP
9	07042-30108	PLUG	1	SN: 80001-UP
10	21M-01-51150	COVER	1	SN: 80001-UP
11	01010-81255	BOLT	3	SN: 80001-UP
12	01643-31232	WASHER	3	SN: 80001-UP
13	01010-81230	BOLT	1	SN: 80001-UP
14	01643-31232	WASHER	1	SN: 80001-UP
15	21M-01-51390	COVER	1	SN: 80001-UP
16	01010-81230	BOLT	2	SN: 80001-UP
17	01643-31232	WASHER	2	SN: 80001-UP
18	21M-54-54240	COVER	1	SN: 80001-UP
19	01010-81230	BOLT	3	SN: 80001-UP
20	01643-31232	WASHER	3	SN: 80001-UP
		[A2]-INSTEAD OF PARTS WITH THIS SYMBOL, THE PARTS LISTED IN THE ROW ABOVE CAN BE USED.		SN: UP

Reference: B0100-001004

Open this exact parts catalogue on K-Part

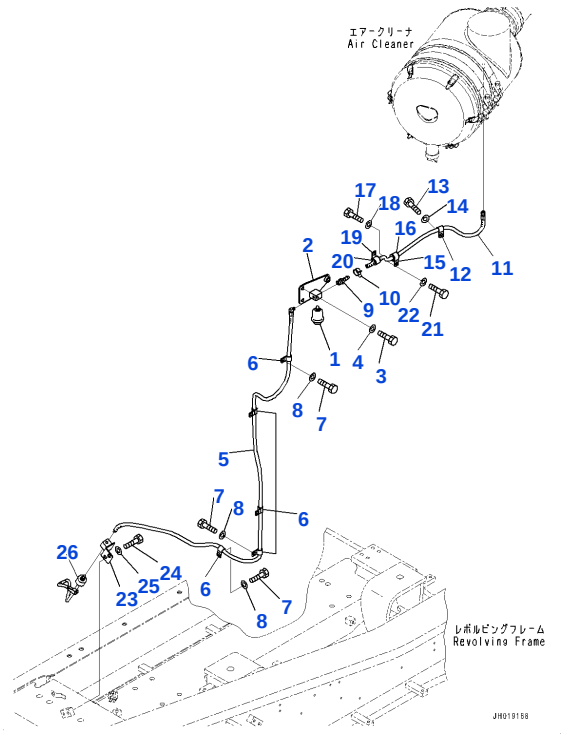

Reference: B0100-001005

B001006 ENGINE INSTALLATION, SENSOR/INSTALLATION(#80001-)

Item	Part No.	Part Name	Qty	Options
1	08672-01000	INDICATOR	1	SN: 80001-UP
2	21M-01-52150	BRACKET	1	SN: 80001-UP
3	01010-81230	BOLT	2	SN: 80001-UP
4	01643-31232	WASHER	2	SN: 80001-UP
5	21M-01-51190	HOSE	1	SN: 80001-UP
6	04434-51412	CLIP	5	SN: 80001-UP
7	01010-81225	BOLT	3	SN: 80001-UP
8	01643-31232	WASHER	3	SN: 80001-UP
9	6131-81-8820	NIPPLE	1	SN: 80001-UP
10	07285-00125	CLIP	1	SN: 80001-UP
11	21M-01-52160	HOSE	1	SN: 80001-UP
12	04434-51410	CLIP	1	SN: 80001-UP
13	01010-81025	BOLT	1	SN: 80001-UP
14	01643-31032	WASHER	1	SN: 80001-UP
15	04434-52110	CLIP	1	SN: 80001-UP
16	07095-40314	CUSHION	1	SN: 80001-UP
17	01010-81025	BOLT	1	SN: 80001-UP
18	01643-31032	WASHER	1	SN: 80001-UP
19	04434-52112	CLIP	1	SN: 80001-UP
20	07095-40314	CUSHION	1	SN: 80001-UP
21	01010-81235	BOLT	1	SN: 80001-UP
22	01643-31232	WASHER	1	SN: 80001-UP
23	21M-01-51970	BRACKET	1	SN: 80001-UP
24	01010-81220	BOLT	2	SN: 80001-UP
25	01643-31232	WASHER	2	SN: 80001-UP
26	7861-93-1430	SENSOR, DUST INDICATOR	1	SN: 80001-UP

Reference: B0100-001005

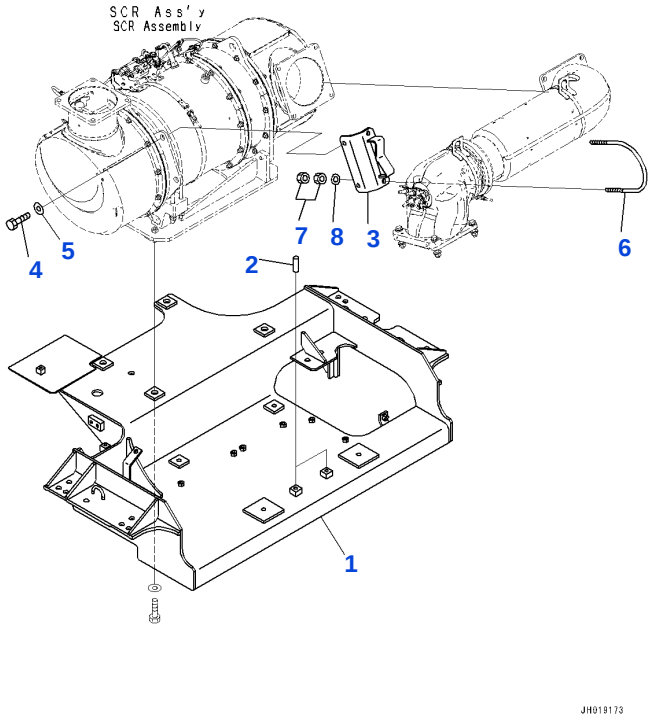

Reference: B0300-001001

B002001 EXHAUST PIPE, BASE BRACKET (#80001-80219)

Item	Part No.	Part Name	Qty	Options
1	21M-01-51210	BRACKET	1	SN: 80001-80219
2	04020-01228	PIN, DOWEL	2	SN: 80001-80219
3	6263-11-5970	BRACKET	1	SN: 80001-80219
4	01010-81235	BOLT	2	SN: 80001-80219
5	175-54-34170	WASHER	2	SN: 80001-80219
6	6263-11-5990	BOLT	1	SN: 80001-80219
7	01581-01210	NUT, STAINLESS	4	SN: 80001-80219
8	01643-31232	WASHER	2	SN: 80001-80219

Reference: B0300-001001

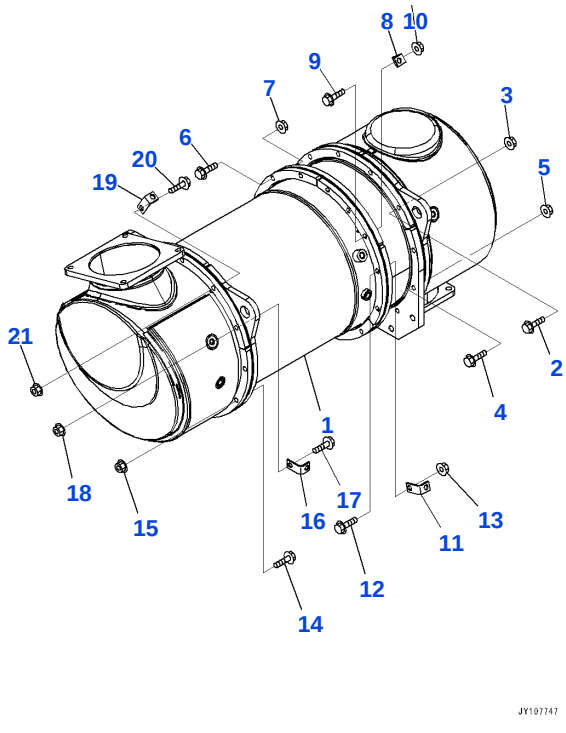

Reference: B0300-001002

B002002 EXHAUST PIPE, KOMATSU DIESEL PARTICULATE FILTER (KDPF) (1/2) (#80001-80219)

Item	Part No.	Part Name	Qty	Options
	6537-01-0040	KOMATSU DIESEL PARTICULATE FILTER (KDPF) ASSEMBLY	1	SN: 80001-80219
1		• BODY	1	SN: 80001-80219
2	01435-01045	• BOLT, FLANGE TYPE	4	SN: 80001-80219
3	01584-01008	• NUT	4	SN: 80001-80219
4	01435-01050	• BOLT, FLANGE TYPE	8	SN: 80001-80219
5	01584-01008	• NUT	8	SN: 80001-80219
6	01435-01050	• BOLT, FLANGE TYPE	11	SN: 80001-80219
7	01584-01008	• NUT	11	SN: 80001-80219
8	6520-91-1010	• PLATE	1	SN: 80001-80219
9	01435-01050	• BOLT, FLANGE TYPE	1	SN: 80001-80219
10	01584-01008	• NUT	1	SN: 80001-80219
11	6520-91-1010	• PLATE	1	SN: 80001-80219
12	01435-01050	• BOLT, FLANGE TYPE	1	SN: 80001-80219
13	01584-01008	• NUT	1	SN: 80001-80219
14	01435-01045	• BOLT, FLANGE TYPE	10	SN: 80001-80219
15	01584-01008	• NUT	10	SN: 80001-80219
16	6520-91-1010	• PLATE	1	SN: 80001-80219
17	01435-01050	• BOLT, FLANGE TYPE	1	SN: 80001-80219
18	01584-01008	• NUT	1	SN: 80001-80219
19	6520-91-1010	• PLATE	1	SN: 80001-80219
20	01435-01050	• BOLT, FLANGE TYPE	1	SN: 80001-80219
21	01584-01008	• NUT	1	SN: 80001-80219
		[C1]-PARTS WITH THIS SYMBOL CANNOT BE SUPPLIED INDIVIDUALLY. THEY ARE SUPPLIED AS ASSEMBLIES.		SN: UP

Reference: B0300-001002

Open this exact parts catalogue on K-Part

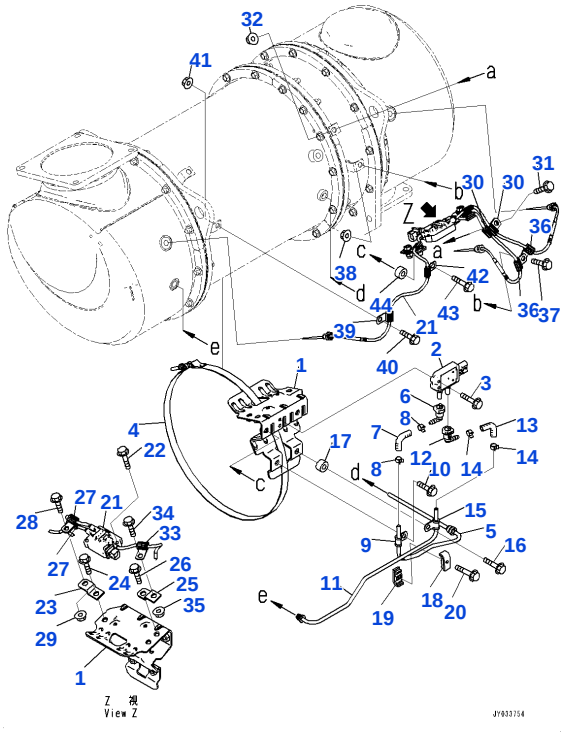

Reference: B0300-001003

B002003 EXHAUST PIPE, Komatsu Diesel Particulate Filter (KDPF) (2/2) (#80001-80219)

Item	Part No.	Part Name	Qty	Options
	6537-01-0040	KOMATSU DIESEL PARTICULATE FILTER (KDPF) ASSEMBLY	1	SN: 80001-80219
1	6547-81-1010	• BRACKET	1	SN: 80001-80219
2	6520-81-1010	• SENSOR, PRESSURE	1	SN: 80001-80219
3	01435-00630	• BOLT, FLANGE TYPE	2	SN: 80001-80219
4	6527-91-1010	• BAND	1	SN: 80001-80219
5	6527-81-1030	• TUBE	1	SN: 80001-80219
6	6520-81-1080	• CONNECTOR	1	SN: 80001-80219
7	6520-81-1060	• HOSE	1	SN: 80001-80219
8	07285-00115	• CLIP	2	SN: 80001-80219
9	600-052-3080	• CLIP	1	SN: 80001-80219
10	01435-01016	• BOLT, FLANGE TYPE	1	SN: 80001-80219
11	6537-81-1060	• TUBE	1	SN: 80001-80219
12	6520-81-1080	• CONNECTOR	1	SN: 80001-80219
13	6520-81-1060	• HOSE	1	SN: 80001-80219
14	07285-00115	• CLIP	2	SN: 80001-80219
15	600-052-3080	• CLIP	1	SN: 80001-80219
16	01435-01030	• BOLT, FLANGE TYPE	1	SN: 80001-80219
17	6526-91-1060	• SPACER	1	SN: 80001-80219
18	6217-71-6650	• CLAMP	1	SN: 80001-80219
19	6217-71-6640	• CLAMP	1	SN: 80001-80219
20	01435-00625	• BOLT, FLANGE TYPE	1	SN: 80001-80219
21	600-816-2510	• SENSOR, TEMPERATURE	1	SN: 80001-80219
22	01435-00625	• BOLT, FLANGE TYPE	2	SN: 80001-80219
23	6536-91-1080	• BRACKET	1	SN: 80001-80219
24	01435-01016	• BOLT, FLANGE TYPE	1	SN: 80001-80219
25	6536-91-1080	• BRACKET	1	SN: 80001-80219
26	01435-01016	• BOLT, FLANGE TYPE	1	SN: 80001-80219
27	6530-91-1010	• CLIP	2	SN: 80001-80219
28	01435-01020	• BOLT, FLANGE TYPE	1	SN: 80001-80219
29	01584-01008	• NUT	1	SN: 80001-80219
30	6530-91-1010	• CLIP	2	SN: 80001-80219
31	01435-01020	• BOLT, FLANGE TYPE	1	SN: 80001-80219

Open this exact parts catalogue on K-Part

Item	Part No.	Part Name	Qty	Options
32	01584-01008	• NUT	1	SN: 80001-80219
33	6530-91-1010	• CLIP	1	SN: 80001-80219
34	01435-01020	• BOLT, FLANGE TYPE	1	SN: 80001-80219
35	01584-01008	• NUT	1	SN: 80001-80219
36	6530-91-1010	• CLIP	2	SN: 80001-80219
37	01435-01020	• BOLT, FLANGE TYPE	1	SN: 80001-80219
38	01584-01008	• NUT	1	SN: 80001-80219
39	6530-91-1010	• CLIP	1	SN: 80001-80219
40	01435-01020	• BOLT, FLANGE TYPE	1	SN: 80001-80219
41	01584-01008	• NUT	1	SN: 80001-80219
42	6530-91-1010	• CLIP	1	SN: 80001-80219
43	01435-01030	• BOLT, FLANGE TYPE	1	SN: 80001-80219
44	6526-91-1060	• SPACER	1	SN: 80001-80219

Reference: B0300-001003

Open this exact parts catalogue on K-Part

Get the complete PDF catalogue

Komatsu PC650-11 (JPN) S/N 80001-80999 (Japanese)

$89

with PayPal | Store cart: $99

Buy this PDF on Manuals Komatsu

Check the model, serial range and language before payment.

Download instructions are emailed after payment confirmation.

This free sample contains 10 catalogue pages.