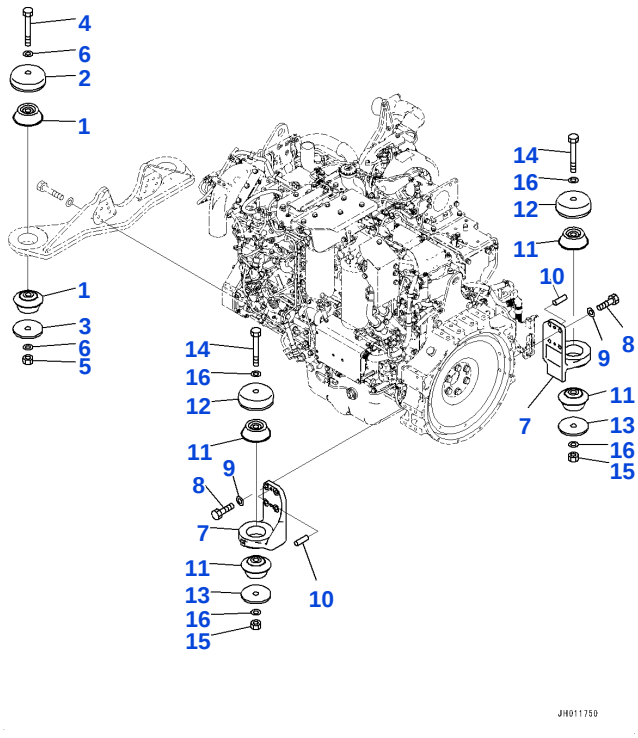

Reference: B0100-001001

B001001 Engine installation related parts, (#85001-)

Item	Part No.	Part Name	Qty	Options
1	207-01-35140	CUSHION	4	SN: 85001-UP
2	207-01-61170	STOPPER	2	SN: 85001-UP
3	208-01-11161	WASHER	2	SN: 85001-UP
4	208-01-11181	BOLT	2	SN: 85001-UP
5	01580-12419	NUT	2	SN: 85001-UP
6	01643-32460	WASHER	4	SN: 85001-UP
7	208-01-71120	BRACKET	2	SN: 85001-UP
8	01010-81650	BOLT	8	SN: 85659-UP
	01010-61650	BOLT	8	SN: 85001-85658
9	01643-31645	WASHER	8	SN: 85001-UP
10	04020-01228	PIN, DOWEL	4	SN: 85001-UP
11	208-01-41221	CUSHION	4	SN: 85001-UP
12	207-01-61170	STOPPER	2	SN: 85001-UP
13	208-01-11161	WASHER	2	SN: 85001-UP
14	208-01-11181	BOLT	2	SN: 85001-UP
15	01580-12419	NUT	2	SN: 85001-UP
16	01643-32460	WASHER	4	SN: 85001-UP

Reference: B0100-001001

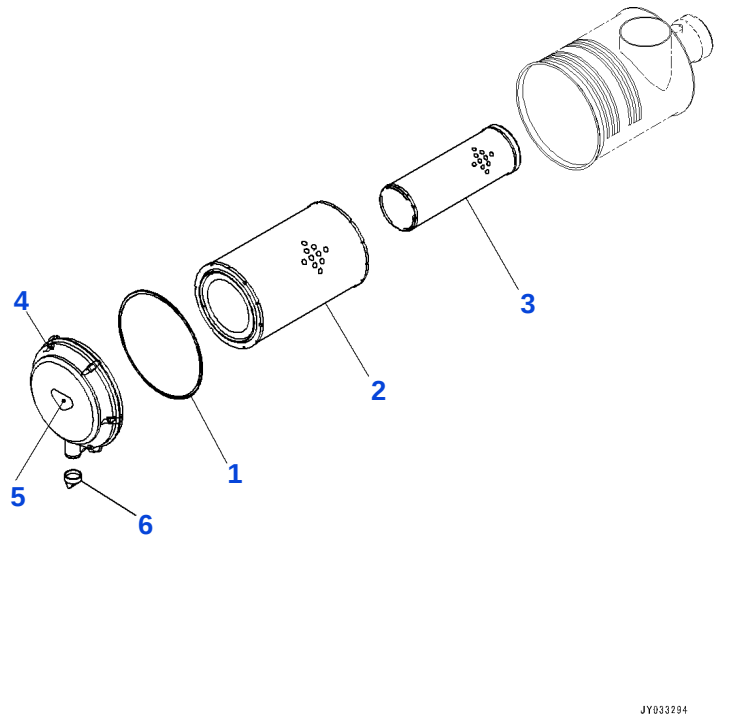

Reference: B0200-001001

B002001 Intake unit, air cleaner components (#85001-)

Item	Part No.	Part Name	Qty	Options
	6252-81-7201	AIR CLEANER ASSEMBLY	1	SN: 85001-UP
	6252-81-7200	AIR CLEANER ASSEMBLY	1	SN: 85001-85801
	600-185-6100	• ELEMENT ASSEMBLY	1	SN: 85001-UP
1	600-184-1671	• • O-RING	1	SN: 85001-UP
2	600-185-6110	• • ELEMENT, OUTER	1	SN: 85001-UP
3		• • ELEMENT, INNER	1	SN: 85001-UP
4	600-184-1611	• COVER ASSEMBLY	1	SN: 85001-UP
5	600-184-2810	• • PLATE, MARK, TOP	1	SN: 85001-UP
6	600-184-1350	• VALVE, VACUATOR	1	SN: 85001-UP
		[B1]-INDICATES PART WITH DISCONTINUED SUPPLY. THE PART SHOWN IN THE LINE ABOVE IS SUPPLIED INSTEAD OF THIS PART.		SN: UP
		[C1]-PARTS WITH THIS SYMBOL CANNOT BE SUPPLIED INDIVIDUALLY. THEY ARE SUPPLIED AS ASSEMBLIES.		SN: UP

Reference: B0200-001001

Open this exact parts catalogue on K-Part

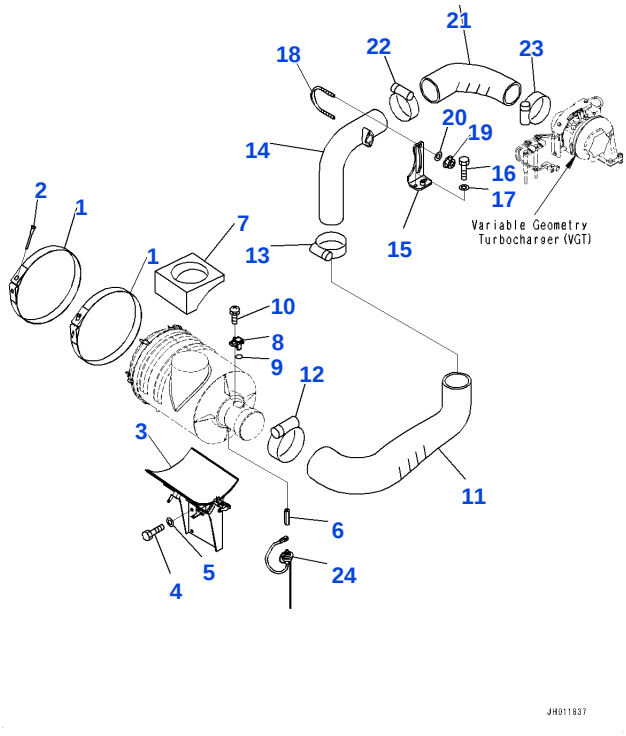

Reference: B0200-001002

B002002 Intake unit, air cleaner related parts (#85001-)

Item	Part No.	Part Name	Qty	Options
1	6151-11-9970	BAND ASSEMBLY	2	SN: 85001-UP
2	6643-11-4641	BOLT	2	SN: 85001-UP
3	208-01-21681	BRACKET	1	SN: 86480-UP
	208-01-21680	BRACKET	1	SN: 85001-86479
4	01010-81230	BOLT	4	SN: 85001-UP
5	01643-31232	WASHER	4	SN: 85001-UP
6	208-01-41910	JOINT	1	SN: 85001-UP
7	208-01-41161	SEAL	1	SN: 85001-UP
8	6252-81-7800	SENSOR AIRFLOW	1	SN: 85001-UP
	6252-81-7900	SENSOR AIRFLOW	1	SN: 85001-86001
9	6252-81-7910	• O-RING	1	SN: 85001-UP
10	01023-10412	SCREW	2	SN: 85001-UP
11	208-01-41131	HOSE	1	SN: 85001-UP
12	208-01-72180	CLAMP	1	SN: 85001-UP
13	07299-00130	CLAMP	1	SN: 85001-UP
14	208-01-41121	TUBE	1	SN: 85001-UP
15	208-01-41142	BRACKET	1	SN: 85001-UP
16	01010-81030	BOLT	2	SN: 85001-UP
17	01643-31032	WASHER	2	SN: 85001-UP
18	07283-31185	CLIP	1	SN: 85001-UP
19	01597-01211	NUT	2	SN: 85001-UP
20	01643-31232	WASHER	2	SN: 85001-UP
21	208-01-41111	HOSE	1	SN: 85001-UP
22	07299-00130	CLAMP	1	SN: 85001-UP
23	07299-00120	CLAMP	1	SN: 85001-UP
24	7861-93-1430	SENSOR, DUST INDICATOR	1	SN: 85001-UP
		[A2]-INSTEAD OF PARTS WITH THIS SYMBOL, THE PARTS LISTED IN THE ROW ABOVE CAN BE USED.		SN: UP
		[B1]-INDICATES PART WITH DISCONTINUED SUPPLY. THE PART SHOWN IN THE LINE ABOVE IS SUPPLIED INSTEAD OF THIS PART.		SN: UP

Reference: B0200-001002

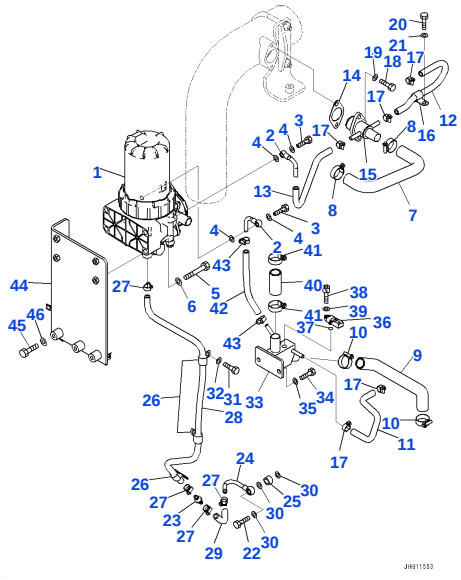

Reference: B0200-001003

B002003 Intake unit, Komatsu Closed Crankcase Ventilation (KCCV) (#85001-86388)

Item	Part No.	Part Name	Qty	Options
1	600-332-1411	VENTILATOR	1	SN: 85001-@
	600-331-1900	• ELEMENT KIT	1	SN: 85001-@
2	6751-81-5190	JOINT	2	SN: 85001-@
3	07206-30812	BOLT, JOINT	2	SN: 85001-@
4	07005-01212	SEAL, WASHER	4	SN: 85001-@
5	01010-81070	BOLT	4	SN: 85001-@
6	01643-31032	WASHER	4	SN: 85001-@
7	6252-21-7180	HOSE	1	SN: 85001-@
8	07281-00359	CLAMP, HOSE	2	SN: 85001-@
9	6252-21-7630	HOSE	1	SN: 85001-@
10	07281-00359	CLAMP, HOSE	2	SN: 85001-@
11	6252-21-7730	HOSE	1	SN: 85001-@
12	6252-21-7520	HOSE	1	SN: 85001-@
13	6252-21-7510	HOSE	1	SN: 85001-@
14	6252-21-7290	GASKET	1	SN: 85001-@
15	6252-21-7280	CONNECTOR	1	SN: 85001-@
16	600-051-2160	CLIP	1	SN: 85001-@
17	11Y-09-11140	CLIP	6	SN: 86088-@
	07281-00197	CLAMP	6	SN: 85001-86087
18	01010-81030	BOLT	2	SN: 85001-@
19	01643-31032	WASHER	2	SN: 85001-@
20	01010-81020	BOLT	1	SN: 85001-@
21	01643-31032	WASHER	1	SN: 85001-@
22	7700-45-1710	BOLT, JOINT	1	SN: 85001-@
23	6261-51-2810	VALVE, CHECK	1	SN: 85001-@
24	6252-21-7470	JOINT	1	SN: 85001-@
25	6151-51-8490	SPACER	1	SN: 85001-@
26	600-051-2160	CLIP	3	SN: 85001-@
27	11Y-09-11140	CLIP	4	SN: 86088-@
	07281-00197	CLAMP	4	SN: 85001-86087
28	208-01-21690	HOSE	1	SN: 85001-@
29	6252-21-7660	HOSE	1	SN: 85001-@
30	07005-01412	SEAL, WASHER	3	SN: 85001-@
31	01010-81025	BOLT	3	SN: 85001-@
32	01643-31032	WASHER	3	SN: 85001-@
33	6252-21-7710	TUBE	1	SN: 85001-@
34	01010-81030	BOLT	2	SN: 85001-@
35	01643-31032	WASHER	2	SN: 85001-@
36	6252-11-2901	SENSOR, PRESSURE, CRANKCASE	1	SN: 85535-@
	6252-11-2900	SENSOR, PRESSURE, CRANKCASE	1	SN: 85001-85534
37	6252-11-2800	• O-RING	1	SN: 85001-@
38	600-331-1930	BOLT	1	SN: 85001-@
39	01640-20508	WASHER	1	SN: 85001-@
40	6252-21-7670	HOSE	1	SN: 85001-@
41	07281-00359	CLAMP, HOSE	2	SN: 85001-@
42	6252-21-7720	HOSE	1	SN: 85001-@

Open this exact parts catalogue on K-Part

Item	Part No.	Part Name	Qty	Options
43	11Y-09-11140	CLIP	2	SN: 86088-@
	07281-00197	CLAMP	2	SN: 85001-86087
44	208-01-21670	BRACKET	1	SN: 85001-86388
45	01010-81230	BOLT	3	SN: 85001-@
46	01643-31232	WASHER	3	SN: 85001-@
		[A1]-PARTS WITH THIS SYMBOL AND THE PARTS LISTED IN THE ROW DIRECTLY ABOVE CAN BE USED INTERCHANGEABLY.		SN: UP
		[A2]-INSTEAD OF PARTS WITH THIS SYMBOL, THE PARTS LISTED IN THE ROW ABOVE CAN BE USED.		SN: UP

Reference: B0200-001003

Open this exact parts catalogue on K-Part

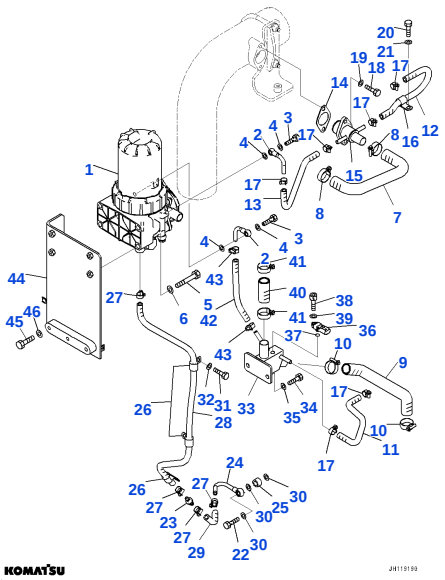

Reference: B0200-001003A

B002004 Intake unit, Komatsu Closed Crankcase Ventilation (KCCV) (#86389-)

Item	Part No.	Part Name	Qty	Options
1	600-332-1411	VENTILATOR	1	SN: 85001-UP
	600-331-1900	• ELEMENT KIT	1	SN: 85001-UP
2	6751-81-5190	JOINT	2	SN: 85001-UP
3	07206-30812	BOLT, JOINT	2	SN: 85001-UP
4	07005-01212	SEAL, WASHER	4	SN: 85001-UP
5	01010-81070	BOLT	4	SN: 85001-UP
6	01643-31032	WASHER	4	SN: 85001-UP
7	6252-21-7180	HOSE	1	SN: 85001-UP
8	07281-00359	CLAMP, HOSE	2	SN: 85001-UP
9	6252-21-7630	HOSE	1	SN: 85001-UP
10	07281-00359	CLAMP, HOSE	2	SN: 85001-UP
11	6252-21-7730	HOSE	1	SN: 85001-UP
12	6252-21-7520	HOSE	1	SN: 85001-UP
13	6252-21-7510	HOSE	1	SN: 85001-UP
14	6252-21-7290	GASKET	1	SN: 85001-UP
15	6252-21-7280	CONNECTOR	1	SN: 85001-UP
16	600-051-2160	CLIP	1	SN: 85001-UP
17	11Y-09-11140	CLIP	6	SN: 86088-UP
18	01010-81030	BOLT	2	SN: 85001-UP
19	01643-31032	WASHER	2	SN: 85001-UP
20	01010-81020	BOLT	1	SN: 85001-UP
21	01643-31032	WASHER	1	SN: 85001-UP
22	7700-45-1710	BOLT, JOINT	1	SN: 85001-UP
23	6261-51-2810	VALVE, CHECK	1	SN: 85001-UP
24	6252-21-7470	JOINT	1	SN: 85001-UP
25	6151-51-8490	SPACER	1	SN: 85001-UP
26	600-051-2160	CLIP	3	SN: 85001-UP
27	11Y-09-11140	CLIP	4	SN: 86088-UP
28	208-01-21690	HOSE	1	SN: 85001-UP
29	6252-21-7660	HOSE	1	SN: 85001-UP
30	07005-01412	SEAL, WASHER	3	SN: 85001-UP
31	01010-81025	BOLT	3	SN: 85001-UP
32	01643-31032	WASHER	3	SN: 85001-UP
33	6252-21-7710	TUBE	1	SN: 85001-UP
34	01010-81030	BOLT	2	SN: 85001-UP
35	01643-31032	WASHER	2	SN: 85001-UP
36	6252-11-2901	SENSOR, PRESSURE, CRANKCASE	1	SN: 85535-UP
37	6252-11-2800	• O-RING	1	SN: 85001-UP
38	600-331-1930	BOLT	1	SN: 85001-UP
39	01640-20508	WASHER	1	SN: 85001-UP
40	6252-21-7670	HOSE	1	SN: 85001-UP
41	07281-00359	CLAMP, HOSE	2	SN: 85001-UP
42	6252-21-7720	HOSE	1	SN: 85001-UP
43	11Y-09-11140	CLIP	2	SN: 86088-UP
44	208-01-21671	BRACKET	1	SN: 86389-UP
45	01010-81230	BOLT	3	SN: 85001-UP

Open this exact parts catalogue on K-Part

Item	Part No.	Part Name	Qty	Options
46	01643-31232	WASHER	3	SN: 85001-UP

Reference: B0200-001003A

Open this exact parts catalogue on K-Part

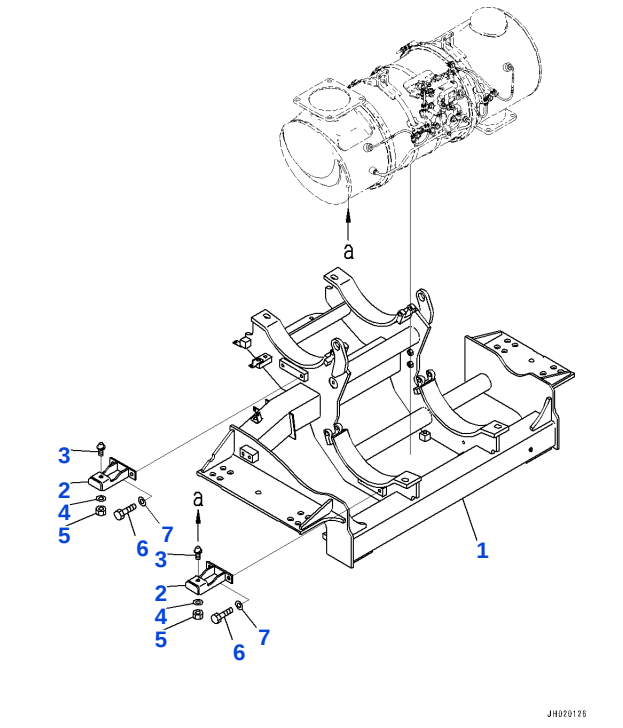

Reference: B0300-002001

B003001 Exhaust, bracket (1/2)(#85001-86214)

Item	Part No.	Part Name	Qty	Options
1	208-01-23110	BRACKET	1	SN: 85001-86214
2	208-01-23120	BRACKET	2	SN: 85001-@
3	208-01-23130	BOLT	2	SN: 85001-@
4	01643-31032	WASHER	2	SN: 85001-@
5	01581-01008	NUT	2	SN: 85001-@
6	01010-81220	BOLT	4	SN: 85001-@
7	01643-31232	WASHER	4	SN: 85001-@

Reference: B0300-002001

Open this exact parts catalogue on K-Part

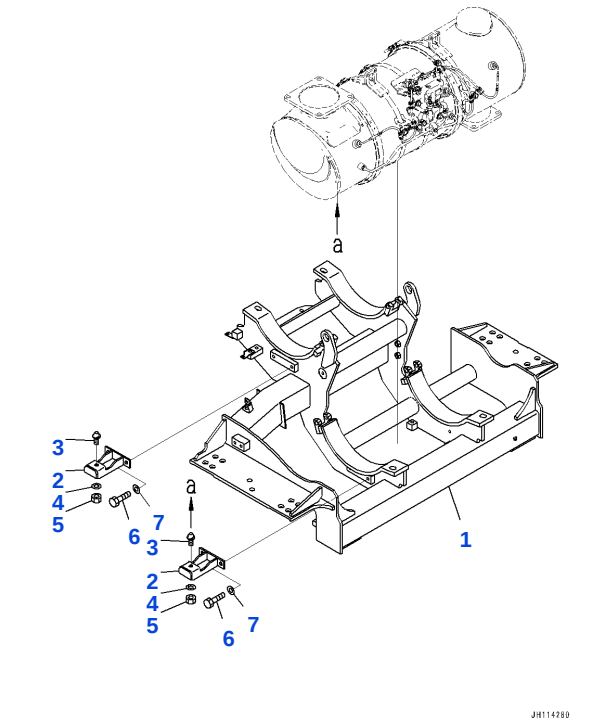

Reference: B0300-002001A

B003002 Exhaust, bracket (1/2)(#86215-)

Item	Part No.	Part Name	Qty	Options
1	2A8-01-16111	BRACKET	1	SN: 86215-UP
2	208-01-23120	BRACKET	2	SN: 85001-UP
3	208-01-23130	BOLT	2	SN: 85001-UP
4	01643-31032	WASHER	2	SN: 85001-UP
5	01581-01008	NUT	2	SN: 85001-UP
6	01010-81220	BOLT	4	SN: 85001-UP
7	01643-31232	WASHER	4	SN: 85001-UP

Reference: B0300-002001A

Open this exact parts catalogue on K-Part

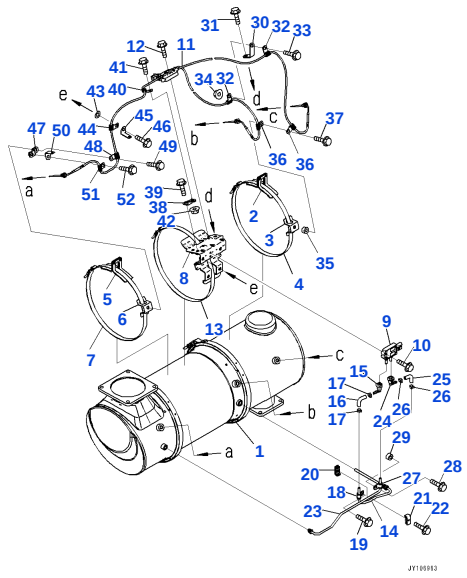

Reference: B0300-002002

B003003 Exhaust, Komatsu Diesel Particulate Filter (KDPF) Components (#85001-85985)

Item	Part No.	Part Name	Qty	Options
	6536-01-0630	KOMATSU DIESEL PARTICULATE FILTER (KDPF) ASSEMBLY	1	SN: 85986-@
	6536-01-0130	KOMATSU DIESEL PARTICULATE FILTER (KDPF) ASSEMBLY	1	SN: 85001-85985
1		• BODY	1	SN: 85001-@
2	6536-91-4140	• HANGER	1	SN: 85001-@
3	6536-81-1030	• BRACKET	1	SN: 85001-@
4	6526-91-4010	• BAND	1	SN: 85001-@
5	6536-91-4140	• HANGER	1	SN: 85001-@
6	6536-81-1030	• BRACKET	1	SN: 85001-@
7	6526-91-4010	• BAND	1	SN: 85001-@
8	6536-81-1010	• BRACKET	1	SN: 85001-@
9	600-816-2910	• SENSOR, PRESSURE, KOMATSU DIESEL PARTICULATE FILTER (KDPF)	1	SN: 85001-@
10	01435-00630	• BOLT, FLANGE TYPE	2	SN: 85001-@
11	600-816-2511	• SENSOR, TEMPERATURE, KOMATSU DIESEL PARTICULATE FILTER (KDPF)	1	SN: 85743-@
	600-816-2510	• SENSOR, TEMPERATURE	1	SN: 85001-85742
12	01435-00625	• BOLT, FLANGE TYPE	2	SN: 85001-@
13	6526-91-4010	• BAND	1	SN: 85001-@
14	6526-81-1030	• TUBE	1	SN: 85001-@
15	6520-81-1080	• CONNECTOR	1	SN: 85001-@
16	6520-81-1060	• HOSE	1	SN: 85001-@
17	07285-00115	• CLIP	2	SN: 85001-@
18	600-052-3080	• CLIP	1	SN: 85001-@
19	01435-01016	• BOLT, FLANGE TYPE	1	SN: 85001-@
20	6217-71-6640	• CLAMP	1	SN: 85001-@
21	6217-71-6650	• CLAMP	1	SN: 85001-@
22	01435-00625	• BOLT, FLANGE TYPE	1	SN: 85001-@
23	6526-81-1020	• TUBE	1	SN: 85001-@
24	6520-81-1080	• CONNECTOR	1	SN: 85001-@
25	6520-81-1060	• HOSE	1	SN: 85001-@
26	07285-00115	• CLIP	2	SN: 85001-@
27	600-052-3080	• CLIP	1	SN: 85001-@
28	01435-01030	• BOLT, FLANGE TYPE	1	SN: 85001-@
29	6526-91-1060	• SPACER	1	SN: 85001-@
30	6536-91-1060	• PLATE	1	SN: 85001-@
31	01435-01016	• BOLT, FLANGE TYPE	1	SN: 85001-@
32	6530-91-1010	• CLIP	2	SN: 85001-@
33	01435-01020	• BOLT, FLANGE TYPE	1	SN: 85001-@
34	01584-01008	• NUT	1	SN: 85001-@
35	6526-91-1060	• SPACER	1	SN: 85001-@
36	6530-91-1010	• CLIP	2	SN: 85001-@
37	01435-01030	• BOLT, FLANGE TYPE	1	SN: 85001-@
38	6536-91-1070	• BRACKET	1	SN: 85001-@
39	01435-01016	• BOLT, FLANGE TYPE	1	SN: 85001-@

Get the complete PDF catalogue

Komatsu PC450LC-11N0 (JPN) S/N 85001-86999 (Japanese)

$89

with PayPal | Store cart: $99

Buy this PDF on Manuals Komatsu

Check the model, serial range and language before payment.

Download instructions are emailed after payment confirmation.

This free sample contains 10 catalogue pages.