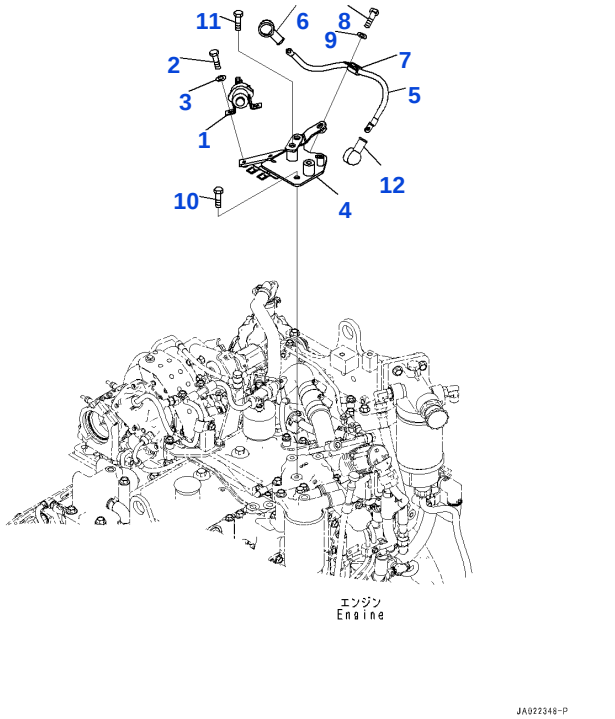

Reference: A1370-501001

B001001 Heater switch, (#60001-)

Item	Part No.	Part Name	Qty	Options
1	600-815-2170	SWITCH, HEATER	1	SN: 60001-UP
2	01010-80616	BOLT	2	SN: 60001-UP
3	01643-30623	WASHER	2	SN: 60001-UP
4	11Y-06-51281	BRACKET	1	SN: 60001-UP
5	11Y-06-51431	WIRING HARNESS	1	SN: 60001-UP
6	08038-02027	CAP, TERMINAL	1	SN: 60001-UP
7	600-051-2100	CLIP	1	SN: 60001-UP
8	01010-81020	BOLT	1	SN: 60001-UP
9	01643-31032	WASHER	1	SN: 60001-UP
10	01435-01020	BOLT, FLANGE TYPE	2	SN: 60001-UP
11	01435-01055	BOLT, FLANGE TYPE	1	SN: 60001-UP
12	08038-02027	CAP, TERMINAL	1	SN: 60001-UP

Reference: A1370-501001

Open this exact parts catalogue on K-Part

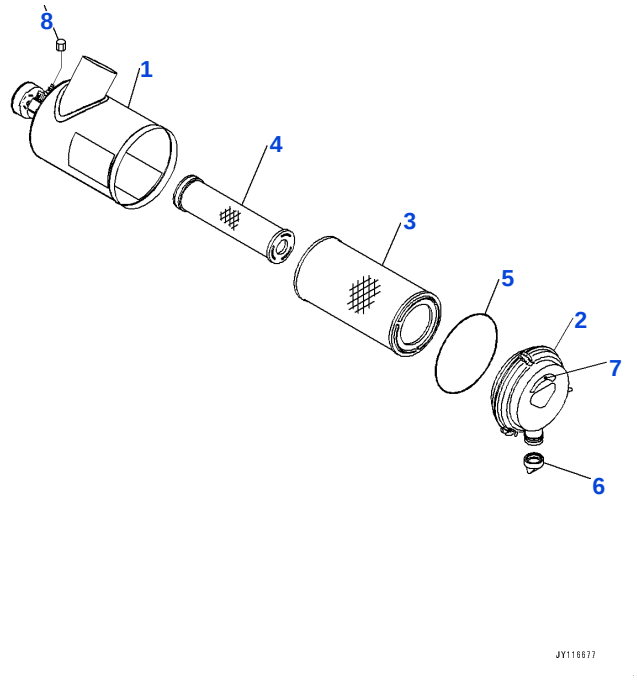

Reference: A1410-501001

B002001 Air cleaner, air cleaner components (#60001-)

Item	Part No.	Part Name	Qty	Options
	6276-81-7200	AIR CLEANER	1	SN: 60001-UP
1		• BODY	1	SN: 60001-UP
2	600-184-1310	• COVER ASSEMBLY	1	SN: 60001-UP
	600-184-2810	• • PLATE, MARK, TOP	1	SN: 60001-UP
	600-185-3200	• ELEMENT ASSEMBLY	1	SN: 60001-UP
3	600-185-3110	• • ELEMENT, OUTER	1	SN: 60001-UP
4		• • ELEMENT, INNER	1	SN: 60001-UP
5	600-184-1370	• • O-RING	1	SN: 60001-UP
6	600-184-1350	• VALVE, VACUATOR	1	SN: 60001-UP
7	600-181-1930	• PLATE, AIR CLEANER CLEANING COUNT SEAL	1	SN: 60001-UP
8	561-02-12420	• CAP	1	SN: 60001-UP
		[C1]-PARTS WITH THIS SYMBOL CANNOT BE SUPPLIED INDIVIDUALLY. THEY ARE SUPPLIED AS ASSEMBLIES.		SN: UP

Reference: A1410-501001

Open this exact parts catalogue on K-Part

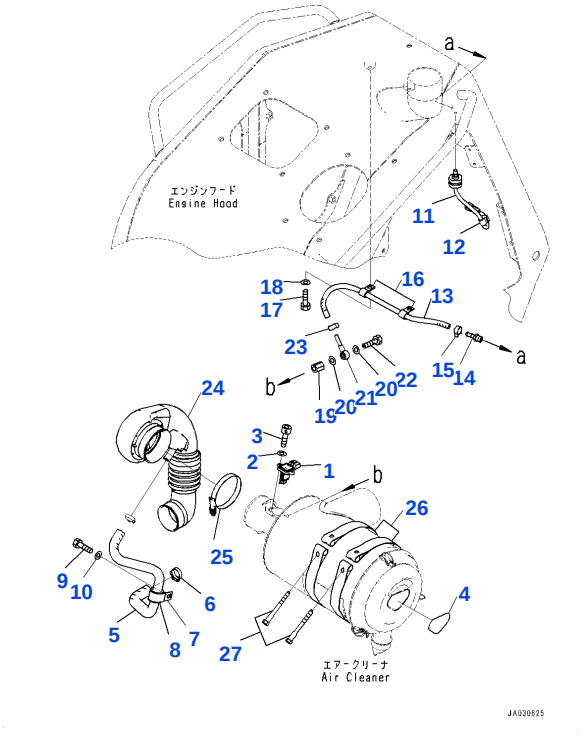

Reference: A1410-501002

B002002 Air cleaner, Air cleaner piping (Intake pipe with pre-cleaner) (#60001-)

Item	Part No.	Part Name	Qty	Options
1	6252-81-7800	SENSOR AIRFLOW	1	SN: 65008-UP
	6252-81-7900	SENSOR AIRFLOW	1	SN: 60001-65007
	6252-81-7910	• O-RING	1	SN: 60001-65007
2	01640-20408	WASHER	2	SN: 60001-UP
3	01252-B0410	BOLT, HEXAGON SOCKET HEAD	2	SN: 60001-UP
4	11Y-01-52580	MARK	1	SN: 60001-UP
5	11Y-01-51211	HOSE	1	SN: 60001-UP
6	6746-21-7150	CLAMP	1	SN: 60001-UP
7	04434-53411	CLIP	1	SN: 60001-UP
8	07095-20625	CUSHION	1	SN: 60001-UP
9	01010-81020	BOLT	1	SN: 60001-UP
10	01643-31032	WASHER	1	SN: 60001-UP
11	7861-93-1430	SENSOR, DUST INDICATOR	1	SN: 60001-UP
12	08211-00720	CLIP	1	SN: 60001-UP
13	11Y-01-51820	HOSE	1	SN: 60001-UP
14	6131-81-8820	NIPPLE	1	SN: 60001-UP
15	07285-00125	CLIP	1	SN: 60001-UP
16	04434-51410	CLIP	2	SN: 60001-UP
17	01010-81020	BOLT	2	SN: 60001-UP
18	01643-31032	WASHER	2	SN: 60001-UP
19	6156-81-8990	NIPPLE	1	SN: 60001-UP
20	07005-01012	SEAL, WASHER	2	SN: 60001-UP
21	6206-71-1770	JOINT	1	SN: 60001-UP
22	07206-30710	BOLT, JOINT	1	SN: 60001-UP
23	07285-00125	CLIP	1	SN: 60001-UP
24	11Y-01-41231	HOSE	1	SN: 60001-UP
25	07299-00105	CLAMP	1	SN: 60001-UP
26	6136-11-4450	BAND	2	SN: 60001-UP
27	6643-11-4641	BOLT	2	SN: 60001-UP
		[A2]-INSTEAD OF PARTS WITH THIS SYMBOL, THE PARTS LISTED IN THE ROW ABOVE CAN BE USED.		SN: UP

Open this exact parts catalogue on K-Part

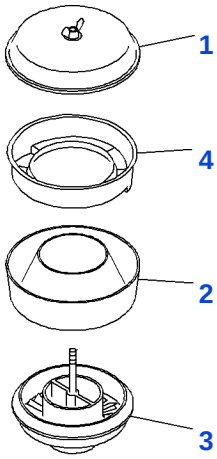

Reference: A1410-501003

B002003 Air cleaner, pre-cleaner (with intake pipe pre-cleaner) (#60001-)

Item	Part No.	Part Name	Qty	Options
	600-181-2630	PRECLEANER ASSEMBLY	1	SN: 60001-UP
1	6672-82-7550	• COVER ASSEMBLY	1	SN: 60001-UP
2	600-181-2130	• BODY	1	SN: 60001-UP
3	6672-82-7510	• SLEEVE SUBASSEMBLY	1	SN: 60001-UP
4	6110-83-7590	• TRAP	1	SN: 60001-UP

Reference: A1410-501003

Open this exact parts catalogue on K-Part

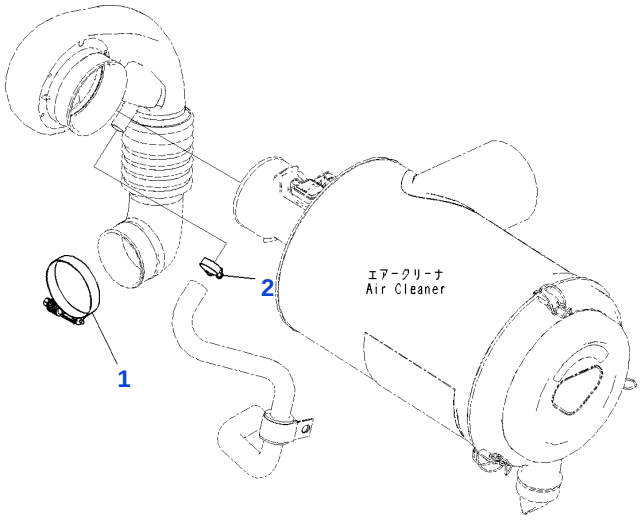

Reference: A1410-501004

B002004 Air cleaner, clamp (#60001-)

Item	Part No.	Part Name	Qty	Options
1	07299-00080	CLAMP, HOSE	1	SN: 60001-UP
2	6746-21-7150	CLAMP	1	SN: 60001-UP

Reference: A1410-501004

Open this exact parts catalogue on K-Part

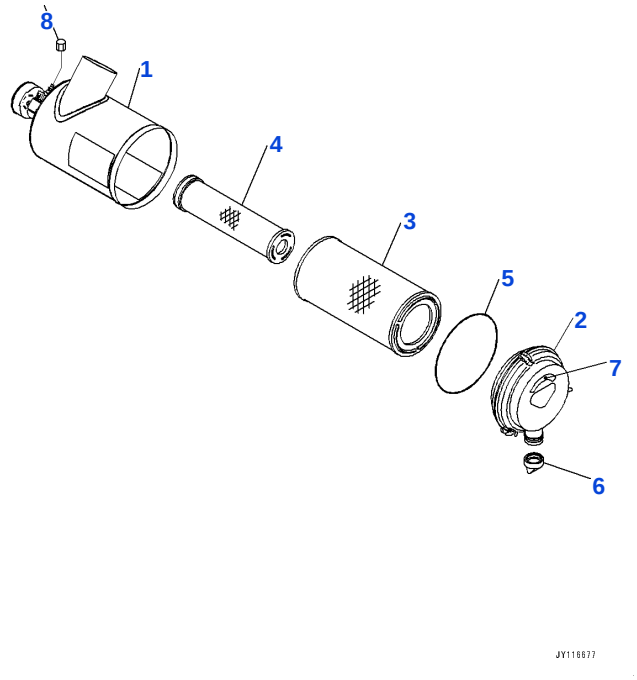

Reference: A1410-502001

B003001 Air cleaner, air cleaner components (#60001-65999)

Item	Part No.	Part Name	Qty	Options
	6276-81-7200	AIR CLEANER	1	SN: 60001-65999
1		• BODY	1	SN: 60001-65999
2	600-184-1310	• COVER ASSEMBLY	1	SN: 60001-65999
	600-184-2810	• • PLATE, MARK, TOP	1	SN: 60001-65999
	600-185-3200	• ELEMENT ASSEMBLY	1	SN: 60001-65999
3	600-185-3110	• • ELEMENT, OUTER	1	SN: 60001-65999
4		• • ELEMENT, INNER	1	SN: 60001-65999
5	600-184-1370	• • O-RING	1	SN: 60001-65999
6	600-184-1350	• VALVE, VACUATOR	1	SN: 60001-65999
7	600-181-1930	• PLATE, AIR CLEANER CLEANING COUNT SEAL	1	SN: 60001-65999
8	561-02-12420	• CAP	1	SN: 60001-65999
		[C1]-PARTS WITH THIS SYMBOL CANNOT BE SUPPLIED INDIVIDUALLY. THEY ARE SUPPLIED AS ASSEMBLIES.		SN: UP

Reference: A1410-502001

Open this exact parts catalogue on K-Part

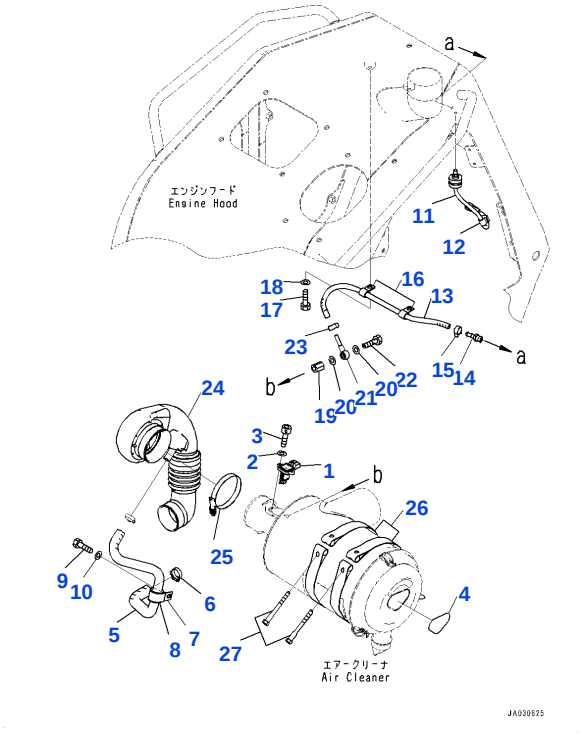

Reference: A1410-502002

B003002 Air cleaner, Air cleaner piping (Intake pipe with rain cap) (#60001-65999)

Item	Part No.	Part Name	Qty	Options
1	6252-81-7800	SENSOR AIRFLOW	1	SN: 65008-65999
	6252-81-7900	SENSOR AIRFLOW	1	SN: 60001-65007
	6252-81-7910	• O-RING	1	SN: 60001-65007
2	01640-20408	WASHER	2	SN: 60001-65999
3	01252-B0410	BOLT, HEXAGON SOCKET HEAD	2	SN: 60001-65999
4	11Y-01-52580	MARK	1	SN: 60001-65999
5	11Y-01-51211	HOSE	1	SN: 60001-65999
6	6746-21-7150	CLAMP	1	SN: 60001-65999
7	04434-53411	CLIP	1	SN: 60001-65999
8	07095-20625	CUSHION	1	SN: 60001-65999
9	01010-81020	BOLT	1	SN: 60001-65999
10	01643-31032	WASHER	1	SN: 60001-65999
11	7861-93-1430	SENSOR, DUST INDICATOR	1	SN: 60001-65999
12	08211-00720	CLIP	1	SN: 60001-65999
13	11Y-01-51820	HOSE	1	SN: 60001-65999
14	6131-81-8820	NIPPLE	1	SN: 60001-65999
15	07285-00125	CLIP	1	SN: 60001-65999
16	04434-51410	CLIP	2	SN: 60001-65999
17	01010-81020	BOLT	2	SN: 60001-65999
18	01643-31032	WASHER	2	SN: 60001-65999
19	6156-81-8990	NIPPLE	1	SN: 60001-65999
20	07005-01012	SEAL, WASHER	2	SN: 60001-65999
21	6206-71-1770	JOINT	1	SN: 60001-65999
22	07206-30710	BOLT, JOINT	1	SN: 60001-65999
23	07285-00125	CLIP	1	SN: 60001-65999
24	11Y-01-41231	HOSE	1	SN: 60001-65999
25	07299-00105	CLAMP	1	SN: 60001-65999
26	6136-11-4450	BAND	2	SN: 60001-65999
27	6643-11-4641	BOLT	2	SN: 60001-65999
		[A2]-INSTEAD OF PARTS WITH THIS SYMBOL, THE PARTS LISTED IN THE ROW ABOVE CAN BE USED.		SN: UP

Open this exact parts catalogue on K-Part

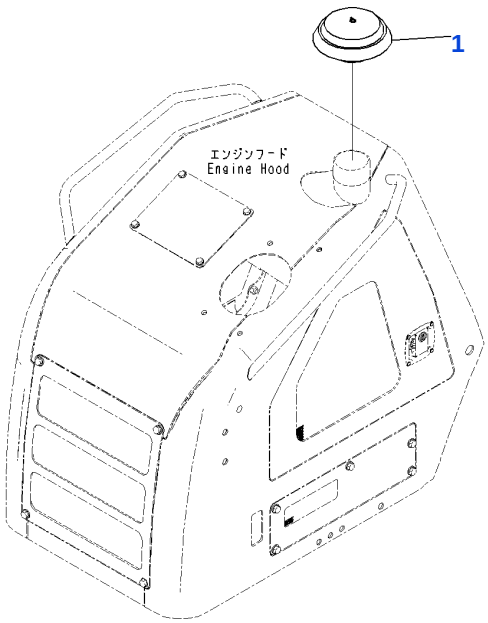

Reference: A1410-502003

B003003 Air cleaner, cap (with intake pipe rain cap) (#60001-65999)

Item	Part No.	Part Name	Qty	Options
1	600-181-3851	CAP	1	SN: 65047-65999
	600-181-3850	CAP	1	SN: 60001-65046
		[A1]-PARTS WITH THIS SYMBOL AND THE PARTS LISTED IN THE ROW DIRECTLY ABOVE CAN BE USED INTERCHANGEABLY.		SN: UP

Reference: A1410-502003

Open this exact parts catalogue on K-Part

Get the complete PDF catalogue

Komatsu D37PLL-24 (JPN) S/N 60001-65999 (Japanese)

$89

with PayPal | Store cart: $99

Buy this PDF on Manuals Komatsu

Check the model, serial range and language before payment.

Download instructions are emailed after payment confirmation.

This free sample contains 10 catalogue pages.